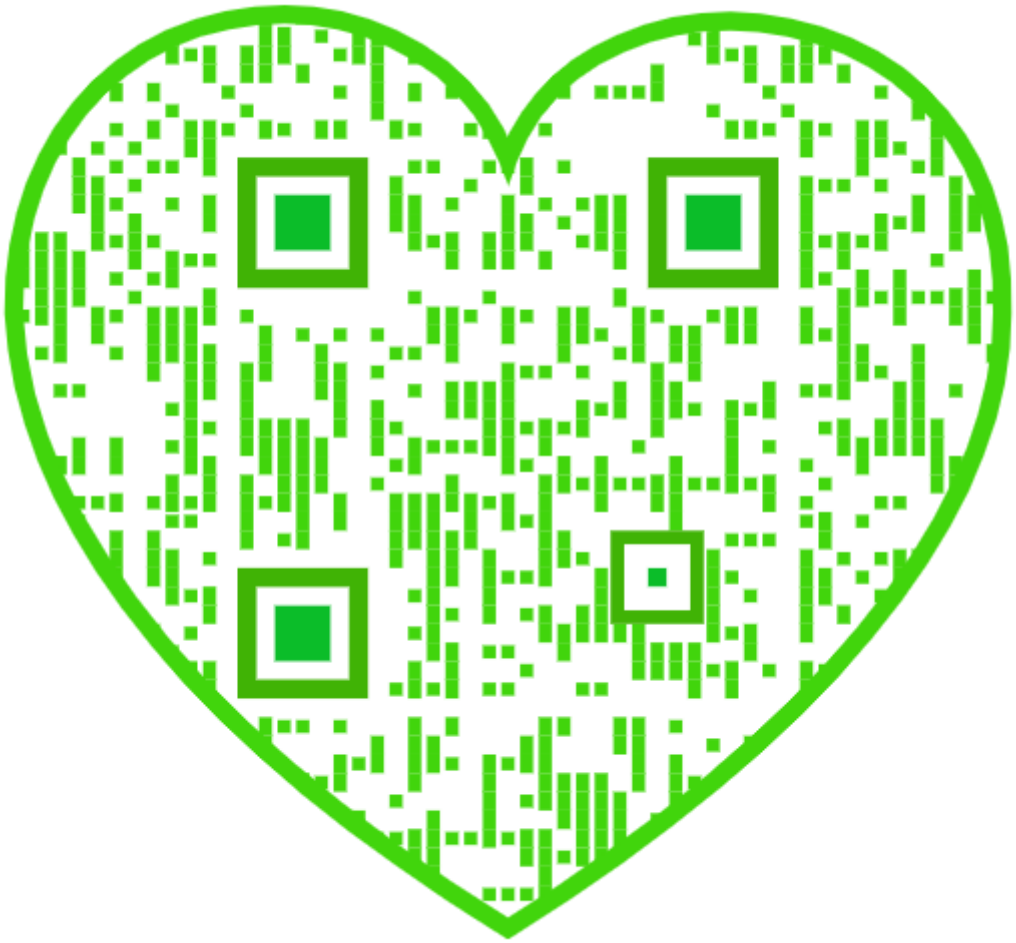

A TEXTBOOK

ON

MINING ENGINEERING

INTERNATIONAL CORRESPONDENCE SCHOOLS
SCRANTON, PA.

MINE HAULAGE
HOISTING AND HOISTING APPLIANCES
SURFACE ARRANGEMENTS OF BITUMINOUS MINES
SURFACE ARRANGEMENTS OF ANTHRACITE MINES
PERCUSSIVE AND ROTARY BORING
COMPRESSED-AIR COAL-CUTTING MACHINERY

WITH PRACTICAL QUESTIONS AND EXAMPLES

1007

SCRANTON
INTERNATIONAL TEXTBOOK COMPANY
A-2

THE NEW YORK
PUBLIC LIBRARY
721595
ASTOR, LENOX AND
TILDEN FOUNDATIONS
R 1916 L

Copyright, 1898, 1899, by THE COLLIERY ENGINEER COMPANY.
Copyright, 1900, by THE COLLIERY ENGINEER COMPANY,
under the title of The Elements of Mining Engineering.

Mine Haulage: Copyright, 1895, 1898, by THE COLLIERY ENGINEER COMPANY.

Hoisting and Hoisting Appliances: Copyright, 1895, by THE COLLIERY ENGINEER COMPANY.

Surface Arrangements of Bituminous Mines: Copyright, 1895, by THE COLLIERY ENGINEER COMPANY.

Surface Arrangements of Anthracite Mines: Copyright, 1895, by THE COLLIERY ENGINEER COMPANY.

Percussive and Rotary Boring: Copyright, 1899, by THE COLLIERY ENGINEER COMPANY.

Compressed-Air Coal-Cutting Machinery: Copyright, 1900, by THE COLLIERY ENGINEER COMPANY.

All rights reserved.

*b*III

BURR PRINTING HOUSE,
FRANKFORT AND JACOB STREETS,
NEW YORK.

CONTENTS.

	Section.	Page.
Mine Haulage.		
Haulage Systems	22	1
Gravity-Planes	22	1
Engine-Planes	22	38
Tail-Rope System	22	51
Endless-Rope System	22	73
Wire Ropes	22	110
The Roadbed	22	115
Track Details	22	119
Underground Haulage	22	122
Haulage by Mine Locomotives	22	129
Hoisting and Hoisting Appliances.		
Electric Motors	23	3
Engines	23	8
Drums	23	27
Rope Wheels	23	40
Brakes	23	47
Clutches	23	60
Indicators	23	62
Ropes	23	65
Buckets	23	75
Cages	23	78
Rope Carriers	23	87
Tracks and Appliances	23	93
Surface Arrangements of Bituminous Mines.		
Surface Arrangements at a Shaft Mine	24	4
Arrangement of Tracks	24	18
Surface Arrangements at a Mine Opened at a Point Below the Tipple Level	24	33
Arrangement of Surface Works	24	39

	Section.	Page.
SURFACE ARRANGEMENTS OF BITUMINOUS MINES —*Continued.*		
Surface Arrangements at Mines Opened by Drifts	24	43
Arrangement of Tipple Structure and Fittings	24	63
Railroad Tracks	24	85
Mine-Car Tracks	24	87
Coke Ovens	24	91
Water-Supply	24	93
Buildings, Shops, etc.	24	99
SURFACE ARRANGEMENTS OF ANTHRACITE MINES.		
General Plan of Arrangements	25	1
The Design of a Plant	25	9
Breakers	25	9
Boiler House	25	14
Hoisting-Engines	25	15
Breaker Engine	25	21
Drainage and Pumping Machinery	25	24
Head-Frames	25	25
Inclined Planes	25	28
Fans	25	32
Sundry Buildings and Other Equipments	25	35
Tracks	25	52
Water-Supply	25	54
The Preparation of Coal	25	57
The Anthracite Coal-Breaker	25	60
Machinery for Preparation of Coal	25	79
Description of Anthracite Breaker	25	130
Preparation of Coal in the Breaker	25	160
PERCUSSIVE AND ROTARY BORING.		
Percussive Boring	26	2
Kinds of Bits	26	5
The Weights of Drills and Hammers	26	8
The Effect of Velocity and Weight in Boring	26	10

PERCUSSIVE AND ROTARY BORING—*Continued.*

Classes and Use of Hammers	26	12
Tempering Drills	26	13
Power Percussive Drills	26	17
Methods and Appliances for Deep Boring	26	30
Portable Percussive-Boring Machines	26	42
Rotary Boring	26	45
Auger Hand-Drilling Machines	26	47
Auger Power Drills	26	52
The Ratchet	26	54
Appliances Used in Diamond Drilling	26	56
Machines Used in Diamond Drilling	26	66
The Value of the Record Furnished by the Diamond Drill	26	75
Practical Notes on Diamond Drilling	26	86
Special Methods and Devices for Diamond Drilling in Soft or Soluble Materials	26	106
Special Advantages Possessed by the Diamond Drill	26	109
The Davis Calyx Drill	26	110

COMPRESSED-AIR COAL-CUTTING MACHINERY.

Compressed-Air Coal-Cutting Machines	27	1
Compressed-Air Power	27	2
Pick Machines	27	5
Chain-Cutter Machines	27	19
Cutter-Bar Machines	27	27
The Longwall Mining Machine	27	28
The Auger Mining Machine	27	28
The Stanley Header	27	29

QUESTIONS AND EXAMPLES.

	Section.
Mine Haulage	22
Hoisting and Hoisting Appliances	23
Surface Arrangements of Bituminous Mines	24
Surface Arrangements of Anthracite Mines	25
Percussive and Rotary Boring	26
Compressed-Air Coal-Cutting Machinery	27

INDEX.

NOTE.—All items in this index refer first to the section (see the Preface) and then to the page of the section. Thus, "Barney, 24 58" means that barney will be found on page 58 of section 24.

A.	Sec.	Page.
Accuracy against speed	26	90
Actual load on hoisting-engines	23	18
Advantages of diamond drill, Special	26	109
" " drilling pit	26	88
Air-compressor building	24	101
" engine	23	24
" locomotive for mines	22	130
Allison steam-pump	25	24
American system of boring	26	33
Amount of water required in mining operations	24	96
Anchoring a tail sheave	22	87
Annealing	26	13
Anthracite coal-breaker	25	60
" " Description of	25	130
" coal, Sizes of	25	83
Appliances used in diamond drilling	26	56
Argillaceous coal	25	57
Arrangement for dumping easily broken coal	24	81
Arrangement of buildings (anthracite mines)	25	1
Arrangement of buildings (anthracite mines)	25	35
Arrangement of buildings, shops, etc. (bituminous mines)	24	99
Arrangement of pipes for water-supply	24	96
Arrangement of structures, etc., at anthracite colliery	25	3
Arrangement of tipples for increasing dumping capacity	24	84
Arrangement of tipple structure	24	63
Arrangement of tracks for drift mine	24	45
Arrangement of mine at shaft with one landing	24	20
Arrangement of mine for tipple landing on trestle	24	18
Auger hand-drilling machines	26	47
" mining-machine	27	28
" power drills	26	52
" stem	26	34
Automatic switches	22	98

B.	Sec.	Page.
Babcock & Wilcox boiler	25	13
Balance cars	22	92
Ball bearing	26	66
Band-wheel	26	38
Barn	25	39
Barney	24	58
"	25	49
Barney pit	25	49
Bars for sizing coal	25	80
Bearing, Ball	26	66
" Conical roller	26	66
Bit, Diamond	26	56
" Reaming	26	93
Bits, Kinds of	26	5
" used in deep boring	26	86
Bituminous coal, Sizes of	24	70
" mines, Surface arrangements of	24	1
Blacksmith shop	24	102
" "	25	35
Block brakes	23	49
" " Objection to	23	51
" for chain hoisting	25	79
Blower, Culm	25	47
Blowing-fans	25	33
Boiler house	24	99
" "	25	14
" Babcock & Wilcox	25	13
" National	25	13
" Stirling	25	13
Bonnet of cage	23	80
Bony coal	25	57

	Sec.	Page.
Bony-coal rolls	25	41
" "	25	58
" "	25	101
Bore holes, Principal uses of...	26	1
Boring appliances	26	33
" Methods of	26	2
Borts	26	57
Box-car loader	24	75
Brake for gravity-planes	22	18
" Steam	23	58
" "	25	20
Brakes, Block	23	49
" Post	23	50
" Strap	23	52
" Zehnder	25	20
Breaker, Capacity of	25	61
" Description of	25	130
" engine	25	21
" Evolution of	25	60
" Getting coal into	25	62-79
" how heated	25	159
" " lighted	25	158
" " ventilated	25	159
" Masonry for	25	10
" Site for	25	10
" structure, Timber for	25	62
Breaking coal, Machinery for	25	97
Broken-coal screen	25	90
Brush dams	25	42
Buckets	23	75
Building for air-compressor	24	101
Buildings, shops, etc., Arrangement of (bituminous mines)	24	99
Buildings, shops, etc., Arrangement of (bituminous mines)	25	1
Buildings, shops, etc., Arrangement of (anthracite mines)	25	35
Buildings, Special features in	24	31
Bull-pump	25	24
Bull-wheel	26	40

C.	Sec.	Page.
Cable grips	22	97
Cages	23	78
Calculations for endless-rope haulage	22	101
" for engine-plane haulage	22	46
" for gravity-planes	22	28
" " tail-rope haulage	22	58
" in hoisting	23	14
" " "	23	30
Cameron steam-pump	25	24
Canopy of cage	23	80
Capacity of screens	25	91
Capping for rope ends	23	69
Carbons	26	57
Car-shifting device	24	24
Car-tracks	23	93
Carpenter shop	24	103
" "	25	35
Carrying sheaves	22	120
Cars (hoisting)	23	75
" in train, Number of	22	64
" on endless rope, Distance apart	22	102
" " " " Number of	22	101
Casing	26	89
Causes of drift in diamond drill holes	26	79
Chain-cutter machine	27	19
Chain-cutter machines, Calculations relating to	27	27
Chain-cutter machines, Favorable and unfavorable conditions for	27	25
Chain-cutter machines, Methods of operating and shifting	27	24
Chain-cutter machines, Types of	27	22
Chain-cutter machines, Working capacity of	27	26
Chain-cutter shearing machines	27	26
Chain hoisting	25	79
Changes in speed of machine	26	90
Characteristics of cutting tools	26	2
Check horn	25	69
Chestnut-coal jig	25	163
Chippers	25	57
Chipping	25	58
Christ coal jig	25	117
" " " Operation of	25	118
Churn drills	26	2
Chute	25	122
" Angle of	24	69
" Dump	25	62
" Griffith loading	25	130
Chutes, Picking	25	88
" Pitch of	25	123
Chuting the coal	24	69
Classes and use of hammers	26	12
" of auger hand-drilling machines	26	47
Cleaning coal	24	77
" "	25	94
Clutches	23	60
Coal-breaker, Anthracite	25	60

	Sec.	Page.
Coal-breaker, Description of..	25	130
Coal, Broken, how handled....	24	81
Coal-cutting machines, Compressed-air	27	1
Coal, Glassy	25	161
" handling appliances where planes are not used	24	60
" how supplied to breaker	25	62
" " " " "	25	79
" jigs	25	108
" Lump	24	70
" Machinery for breaking	25	97
" Nut	24	70
" Preparation of	25	160
" Rough	25	161
" Sizes of	24	70
" " "	25	83
" Slack	24	70
" washer and separator, Righter	25	93
" washeries	25	41
Coal-washing plant	24	90
Coffee-mill	25	9
Coke-ovens	24	91
Colliery defined	25	1
Colors, Flow of	26	16
Columns, Drilling	26	19
Compressed-air coal-cutting machines	27	1
Compressed-air engine	23	24
" locomotive for mines	22	130
" plant, Operation of	22	131
" power	27	2
" power, Advantages of	27	4
Condensation, Initial	23	12
Condensing and non-condensing hoisting-engines	23	10
Conductors	23	96
Conduits for rope haulage	22	116
Conical drum	23	30
" roller bearing	26	66
Controller, Rheostatic	23	8
" Speed	23	8
Conveying coal, Machinery for	25	122
Conveyors	25	126
Corbel blocks	25	30
Core	26	57
" barrel	26	59
" barrels, Non-rotating	26	108
" " Special	26	107
Core lifter ring	26	57
Core lifters, Special	26	108
Corrugated rolls	25	101
Cost per foot in diamond drilling	26	102
Counter screen	25	83
Couplings for shafts	25	132
" Tail-rope	22	67
Cradle	24	65
" dump	25	67
Cross-head	23	76
Cross latch	25	53
Cross-over tips	24	66
Cross-ties required for haulage road	22	119
Crushers	25	98
Culm blower	25	47
" conveyors	25	44
" dumps	25	40
Cutter-bar machines	27	27
Cutters, Intermittent	26	2
Cutting tools, Characteristics of	26	2
" " Definition of..	26	2
Cylinder of steam-engine, Range of temperature in	23	11
Cylinder relief-valve	23	25
Cylindrical drum	23	27

D.

	Sec.	Page.
Dams, Brush	25	42
Davis calyx drill	26	110
Deep boring, Bits used in	26	86
" " Methods and appliances of	26	80
" percussive-boring appliances	26	83
Deflecting sheaves	22	13
" "	22	89
Derrick, Steel	26	38
" Wooden	26	38
Designing an anthracite plant	25	9
Detaching-hooks	22	69
"	23	70
" Objections to	23	71
Details of gravity-planes	22	5
Diameter of fans	25	34
" " rope drum	22	112
" " " "	23	35
Diamond bit	26	56
" drill holes, Drift in..	26	77
" " " " "	26	82
" " " Surveying	26	83
" drilling, Appliances used in	26	56

	Sec.	Page.
Diamond drilling, Cost per foot in	26	102
" drilling in soft or soluble materials	26	106
" drilling, Line of tool used for	26	59
" drilling, Machines used in	26	66
" drilling, Machines used in	26	74
" drilling, Practical notes on	26	86
Diamonds in the bit, Methods of setting	26	97
" Lost	26	97
Differential feed	26	60
Dimensions and features of percussive rock-drills	26	22
Dimensions and weights of parts of string of tools	26	38
Direct-current dynamo	23	5
Direct-current dynamo, Use of, for hoisting	23	5
Dirt dumps, Location of	25	49
Disadvantages of drilling pit	26	88
Dissipation of energy	26	9
Distance of engine from shaft	24	17
District rope system for engine-planes	22	49
Doctor's office	24	110
Dolly	26	8
Double-chain elevator	25	126
Double-cylinder hydraulic feed	26	65
Drag-bar	22	43
Drags or conveyors	25	126
Drainage and pumping machinery	25	24
Drift	25	1
" in diamond drill holes	26	77
" " " " " "	26	82
" in diamond drill holes, Causes of	26	79
Drill, Davis calyx	26	110
" Electric percussive	26	23
Drilling, Guides for the	26	90
" columns	26	19
" from the surface	26	86
" from underground with the diamond drill	26	101
" pit	26	88
" Rate of	26	102
Drills and hammers, Weights of	26	8
" Auger power	26	52
Drills, Churn	26	2
" Compressed-air	26	17
" Hand	26	2
" Power	26	2
" Power percussive	26	17
" Steam	26	17
" Tempering	26	18
Drive head	26	41
Driving screens	25	86
Drop-flight conveyor	25	127
Drum appliances	23	47
Drums	23	27
"	25	19
" Built-up	23	29
" Conical	23	30
" Cylindrical	23	27
" Size of	22	112
" " "	23	27
Dump chute	25	62
" Cradle	25	67
" Forward	25	73
Dumping	24	63
Dumping capacity, Arrangements for increasing	24	84
Dumping easily broken coal	24	81
Dumps	23	98
Duplex hoisting-engine	23	9
Dynamos	23	3
" Alternating-current	23	5
" Direct-current	23	5

E.	Sec.	Page.
Earth dam and reservoir, Construction of	24	95
Effect of velocity and weight in boring	26	10
Electric hoisting	23	3
" locomotives, Advantages of, over steam	22	134
" locomotives for mines	22	134
" motors	23	3
" " Advantages of	23	4
" percussive drill	26	23
" power plant	24	101
Electrical coal drill, Jeffrey rotary	26	53
Electricity in mining, Advantages of, over steam	23	4
Elevation of rail on curves	22	116
Elevator, Double-chain	25	126
" Link-and-bar	25	124
" Traction-wheel	25	126
Elevators	25	124
End sockets for main and tail ropes	22	68

	Sec.	Page.
Endless haulage ropes, Tension in	22	107
Endless haulage ropes, Velocity of	22	104
Endless haulage ropes, Weight of, in relation to velocity	22	104
Endless-rope haulage	22	73
Endless-rope haulage, Calculations for	22	101
Endless-rope haulage, Conditions suitable for	22	77
Endless-rope haulage, Disadvantages of	22	80
Endless-rope haulage, Horse-power of	22	107
Endless-rope haulage on surface	22	84
Endless-rope haulage worked with system of bands	22	82
Energy, Dissipation of	26	9
Engine, Breaker	25	21
" Compressed-air	23	24
" Condensing	23	10
" Distance of, from shaft	24	17
" Duplex	23	9
" foundations	25	23
" Haulage	22	122
" " Location of	22	71
" Hoisting	23	8
" " Location of	25	16
" " Size of	23	14
" houses	25	35
" Indicating	25	23
" Non-condensing	23	10
" plane haulage calculations	22	46
" plane haulage, District rope system	22	49
" planes	22	38
" " Details of	22	43
" " Grade of	22	46
" room	24	99
Exhausting fans	25	33
Expansion of wire ropes by heat	22	92

F.

	Sec.	Page.
Fans	25	32
" Diameter of	25	34
" Selection of	25	34
Finger-bars	25	81
Fire boss	25	38
Fishing or garppling tools	26	41
" taps	26	93
Fixed bars	25	80
" rolls	25	101
Fixed screens	25	82
Flat steel ropes	23	67
" " " Table of	23	68
Flatter	26	8
Fleet-wheel	22	7
Flight conveyor	25	127
Flow of colors	26	16
Forms of steel bits for rotary boring	26	46
Forward dump	25	73
Frames, Head	23	102
" "	24	12
" "	25	25
Friction of cars	22	3
" plates	26	65
" Side	26	91

G.

	Sec.	Page.
Gasoline engines for mine haulage	23	134
Gasoline engines, Objections to	22	134
Generator, Electric	23	5
Glassy coal	25	161
Goyne steam-pump	25	24
Grade, Alteration of	22	17
Grades for inclined planes	24	60
" " " "	22	4
Gravity-planes	22	1
Gravity-planes, Conditions required for successful operation of	22	1
Gravity-planes, Details of	22	5
Gravity-planes for local haulage	22	4
Gravity-planes, Inclination of	22	20
Gravity-planes, Primary considerations in designing	23	23
Griffith loading chute	25	130
Grip-car	22	100
Grip-wheel for gravity-planes	22	12
Gudgeon of screen	25	89
Guibal fan	25	33
Guide sheaves, Location of	22	89
Guides	23	96
" for the driller	26	90
Gunboats	23	85
"	25	49
Gyrating screens	25	96

H.

	Sec.	Page.
Hammers, Classes and use of	26	12
Hand-drills	26	2
Hand-power drill, Jackson	26	25
" " Jones	26	28
" rock-drill	26	25

	Sec.	Page.
Handling easily broken coal...	24	81
" rock and waste.....	24	80
Haulage by mine locomotives	22	129
" Endless-rope system of.....	22	73
" engines, Location of	22	71
" " Underground	22	122
" ropes, Weight of, relative to velocity....	22	104
" systems.....	22	1
" Tail-rope.....	22	51
Hawk-bill tooth of roll.....	25	99
Hay and feed, Storage of.....	24	107
Head-frames.....	23	102
"	24	12
"	25	25
" Forces acting upon.....	23	103
Header, Stanley.....	27	29
Heating coal-breaker.....	25	159
Herring separator.....	25	106
Hoist, Inclined.....	25	16
" indicators.....	23	62
" " Fault of.....	23	64
" Link-belt	25	77
" Vertical.....	25	15
" "	25	63
Hoisting, Calculated examples in.....	23	14
" Calculated examples in.....	23	30
" drums.....	25	19
" engines	23	8
" "	25	15
" " Calculation of size of..	23	14
" " Location of.	25	16
" " Requirements of..	25	18
" " Work of.....	23	18
" Kœpe system of.....	23	41
" plant, Component parts of.....	23	1
" plug.....	26	60
" ropes.....	23	65
" " Flat.....	23	67
" " Round.....	23	67
" Whiting system of...	23	43
Hooks, Detaching.....	22	69
" "	23	70
Hopper of rolls.....	25	100
Horizontal tail sheave.....	22	85
Horsepower to operate haulage.....	22	50
Hospital.....	24	110
Houser slate picker.....	25	105
Hydraulic feed.....	26	63
" " Double-cylinder.....	26	65
" " Single-cylinder	26	65

I.	Sec.	Page.
Inclination of gravity-planes..	22	20
Inclined hoist.....	25	16
" planes.....	22	21
" "	25	28
" " Length of and grades for..	22	17
" " Length of and grades for..	24	60
Indicating engines.....	25	23
Indicator, Hoist.....	23	62
Indicators, Thrust.....	26	62
Induction motor.....	23	7
Initial condensation.....	23	12
Intermittent cutters.....	26	2
Iron house.....	24	107
" "	25	37
" tanks for water-supply...	24	95
" wire rope.....	23	65
Iron-clad series-wound motor	23	8

J.	Sec.	Page.
Jackson hand-power percussive drill.....	26	25
Jars	26	34
Jeanesville steam-pump.....	25	24
Jig.....	22	5
"	22	11
"	25	108
" Chestnut-coal	25	163
" Christ.....	25	117
" Piston.....	25	109
" with movable pan.....	25	113
Jigging	25	108
Jumper	26	2
Jones hand-power drill.....	26	28

K.	Sec.	Page.
Keeps	23	100
Kinds of bits.....	26	5
Knock-off links.....	22	69
Knowles steam-pump.....	25	24
Kœpe system of hoisting.....	23	41
" system, Advantages and disadvantages of.....	23	42

L.	Sec.	Page.
Laidlaw-Dunn-Gordon steam-pump.....	25	24
Lamp house.....	25	38

	Sec.	Page.
Lamp inspector's office	24	110
" man	25	38
Landing fans	23	100
Latch switch	25	54
Length and grades for inclined planes	24	60
Lifting swivel	26	60
Lighting coal-breaker	25	158
Line of tools for diamond drilling	26	59
Link-and-bar elevator	25	124
Link-belt hoist	25	77
Lip screen	25	82
Loader, Box-car	24	75
Loading chute, Griffith	25	130
" coal	24	72
" lips	25	128
Location of guide sheaves	22	89
" " reservoir	24	94
Locked wire rope	22	110
Locomotives for mine haulage	22	129
Longwall mining-machine	27	28
Lost diamonds	26	97
" rods, Recovering	26	93
" " "	26	96
" water	26	91
Lumber-yard	25	39
Lump-coal crusher	25	98
" rolls	25	103

M.

	Sec.	Page.
Machine-shops	24	103
Machinery for breaking coal	25	97
" " conveying coal in breaker	25	122
" " preparation of coal	25	79
" " separating slate from coal	25	105
" " sizing coal	25	80
Machines, Auger hand-drilling	26	47
" Posts and grips for	23	48
" used in diamond drilling	26	66
Main hopper	25	135
" reservoir for water-supply	24	94
Masonry for breakers	25	10
Material and lumber-yard	24	105
Materials for rope-haulage tracks	22	119
Meshes for different sizes of coal	25	88
Methods and appliances for deep boring	26	30
Methods of boring	26	2
Methods of diamond drilling in soft or soluble material	26	106
Methods of recovering lost bit	26	95
Methods of setting diamonds in the bit	26	97
Methods requiring special tools or fixtures	26	107
Miller's spudding attachments	26	43
Mine-car tracks	24	87
" "	25	58
Mine clerk's office	24	109
" haulage	22	1
" " Locomotives for	22	129
" office	24	110
Miners' houses	24	110
Mining-machine, Longwall	27	28
" Auger	27	28
Mitchell tipple	24	68
Monitors	25	73
Motors	23	1
" Induction	23	7
" Iron-clad series-wound	23	8
" Non-synchronous	23	7
" Synchronous	23	6
Movable bars	25	81
" screens	25	82
Multiphase alternating current	23	7
" dynamo	23	7
" generator	23	7

N.

	Sec.	Page.
National boiler	25	13
Non-condensing engine	23	10
Non-rotating core-barrels	26	108
Non-synchronous motor	23	7
Notes on diamond drill, Practical	26	86

O.

	Sec.	Page.
Office, Doctor's	24	110
" Mine	24	110
" "	25	37
" " clerk's	24	109
" Lamp inspector's	24	110
" Shipping-clerk's	24	109
" Storekeeper's	24	109
" Weighman's	24	109
Oil house	24	107
Oscillating bars	25	81
" tips	24	65
Oven, Coke	24	91

P.

	Sec.	Page.
Parting of rods	26	92
Penitentiary	25	9

	Sec.	Page.
Pentagonal screen	25	91
Percussive boring, Definition of	26	2
Percussive boring machines, Portable	26	42
Percussive rock-drill, Dimensions and features of	26	22
Percussive rock-drill, Requirements of	26	21
Phillips tipple	24	69
Phœnix column shaft	25	89
Pick hammer	25	58
" machines	27	5
" machines, Method of operating	27	9
" machines, Shearing with	27	11
" machines, Favorable and unfavorable conditions for	27	13
" machines, Working capacities of	27	15
" machines, Calculations relating to	27	16
" shearing machine	27	18
Picking chutes	25	88
Pipe, Stand	26	58
Pipes for water-supply, Arrangement of	24	96
" Size of	24	97
Piston coal jig	25	109
Pit, Drilling	26	88
Pitch of chute	25	123
Pitman	26	42
Planes, Inclined	25	28
Plant, Electric-power	24	101
" for washing coal	24	90
Plates, Friction	26	65
Platform	25	137
" bars	25	83
Plug, Hoisting	26	60
Points to be observed in tempering	26	14
Portable percussive-boring machines	26	42
Post and grips for hand-drilling machines	26	48
" brakes	23	50
Powder house	24	108
" "	25	36
Power drills	26	2
" percussive drills, General construction of	26	17
Practical notes on diamond drilling	26	86
Preparation of coal in breakers	25	57
Preparation of coal in breakers	25	160
" " coal, Various methods for	25	59
" " coal, Machinery used in	25	79
" work for surface drilling	26	86
Prepared-coal rolls	25	100
Preserving wire rope	22	114
Pressure on guide sheaves	22	91
" registers	26	62
Primary considerations in designing gravity-planes	22	23
Principal uses of bore holes	26	1
Pump, Bull	25	24
" Steam, Types of	25	24
Pumping at a slope mine	24	38
" machinery	25	24
Pump way	25	24
Purification of water	25	55
Push-back tips	24	64
Pusher	25	69
Pyramidal tooth of rolls	25	99

R.

	Sec.	Page.
Railroad-tracks at mines	24	85
" " "	25	52
Rails for haulage tracks	22	115
" Weight of, per mile of road	22	119
Ratchet	26	54
Rate of drilling	26	102
Reamer	26	42
Reaming bit	26	93
Record furnished by diamond drill, Value of	26	75
Records	26	99
Recovering lost rods	26	93
" " "	26	96
Reels	23	36
" Action of	23	36
" Advantages of	23	40
" Calculations for	23	37
" Disadvantages of	23	40
Registers, Pressure	26	62
Relief-valve of hoisting-engine	23	25
Requirements of a good percussive rock-drill	26	21
Reservoir, Construction of	24	95
" sheave	22	85
" Size of pipes for	24	97
" Style and location of	24	94
Revolving tips	24	65
Rheostatic controller	23	8

	Sec.	Page.
Righter coal washer and separator	25	98
Ring, Core-lifter	26	57
Roadbed for rope haulage	22	115
Rock and waste, Handling of	24	80
" banks	25	40
Rock-drill, Hand-power	20	25
Rods, Parting of	26	92
Rollers or carrying sheaves	22	120
" " " "	23	92
Rolls, Bony-coal	25	41
" "	25	101
" Corrugated	25	101
" "	25	103
" Fixed	25	101
" Main	25	98
" Prepared-coal	25	100
" Saucer	25	103
" Taper	25	103
Rope carriers	23	87
" ends	23	69
" fastenings	23	65
" haulage, Systems of	22	1
Rope-socket	26	34
" wheels, Kœpe system	23	41
" " Whiting system	23	43
Ropes	23	65
" Flat	23	67
" in endless system, Arrangement of	22	74
" Iron or steel	23	65
" Round	23	67
" Tail	23	73
" Taper	23	69
" Wire	22	110
Rotary boring, Definition of	26	45
" " Forms of steel bits for	26	46
Rough coal	25	161
Round ropes	23	67

S.	Sec.	Page.
Safety block	22	30
" "	25	30
" catch	23	81
" device to prevent breakage of roll teeth	25	102
" lock	22	36
Samples from soft material, Special devices for obtaining	26	109
Sand line	26	43
" pump	26	40
Saucer rolls	25	103
Sawmill	24	106
Scraper	26	12
Screen bars, Standard sections and spacing of	24	71
" Broken-coal	25	90
" Capacity of	25	91
" Counter	25	83
" Double-jacketed	25	83
" gudgeon	25	89
" Gyrating	25	96
" Lip	25	82
" Main	25	83
" Meshes of, for various sizes of coal	25	88
" Methods of driving	25	86
" Mud	25	83
" Pea	24	70
" Pentagonal	25	91
" Segments of	25	85
" Shaking	25	92
" Single-jacketed	25	83
" Slate-picker	25	59
" Steamboat	25	90
Screening bituminous coal	24	70
Screens, Arrangement of	24	72
" Fixed	25	82
" Movable	25	82
Seed bags	26	41
Segments of screen	25	85
Self-acting inclines	22	3
" inclines, Description of	22	5
" jig	22	11
Separator, Herring	25	106
" Righter	25	98
Setting diamonds in the bit, Methods of	26	97
Shaft	25	1
" cage	23	79
Shaker	25	92
Shaw gas tester	25	37
Shearing machine, Pick	27	18
" machines, Chain-cutter	27	26
Sheaves, Carrying	22	120
" "	23	92
" Diameter of	22	112
" for hoisting	23	88
" Location of	22	89
" Tail or return	23	85
Shifting cars	24	24
Shipper	25	37
Shipping-clerk's office	24	109
Shops, Arrangement of	24	108
" " "	25	35

	Sec.	Page.
Side friction	26	91
Siding, Determination of length of	24	89
Single-cylinder hydraulic feed	26	65
Single-phase alternating-current dynamo	23	6
Sinker-bar	26	34
Site for breaker	25	10
Size of drum	22	112
" " "	23	27
" " hoisting-engine	23	14
" " water-supply pipes	24	97
Sizes of anthracite coal	25	83
" " bituminous coal	24	70
Sizing coal, Machinery for	25	80
Skips	23	85
Slack	24	70
Slate picker, Houser	25	105
" " screen	25	59
" " "	25	84
" Separation of, from coal	25	105
Slaty coal	25	57
Slope, Defined	25	1
" landing	26	30
" transfer carriage	25	75
Slush bank	25	41
" box	25	113
Sockets for main and tail ropes	22	68
Sow	26	8
Special advantages of diamond drill	26	109
" core-barrels	26	107
" core-lifters	26	108
" devices for obtaining samples from soft material	26	109
Speed, Accuracy against	26	99
" controller	23	8
" of machine, Changes in	26	90
Splicing wire ropes	22	113
Spreader	26	8
"	25	71
" stick	25	73
Spring-pole system of boring	26	30
Spudding, Definition of	26	45
Stables	24	108
Stand-pipe	26	58
Stanley header	27	29
Steam-brake	23	58
"	25	20
Steam locomotives for mine haulage	22	129
" plant	25	11
" pumps, Types of	25	24
Steam, Unsuitability of, for mines	22	129
" Unsuitability of, for mines	23	24
Steamboat screens	25	90
Steel derrick	26	38
" rope, Advantages of, over iron	23	65
Stirling boiler	25	13
Stockton steam-pump	25	24
Stone reservoir, Construction of	24	95
Store	24	110
Storekeeper's office	24	109
Strap brakes	23	52
" " Holding force of	23	57
String of tools	26	33
String of tools, Dimensions and weights of parts of	26	38
Stripping	25	1
Sulphuric acid, Test for	25	56
Supply house	25	57
" room	24	106
Surface arrangements at drift opening above tipple	24	51
Surface arrangements at drift opening with grade road	24	43
Surface arrangements at mine opening below tipple	24	33
Surface arrangements at shaft mine	24	4
Surface arrangements, Character and extent of	24	1
Surface arrangements, Conditions influencing design of	24	2
Surface arrangements of bituminous mines	24	1
Surface arrangements, Table of	25	7
Surface drilling, Preparation work for	26	86
Surface works, Special arrangements of	24	30
Surveying diamond-drill holes	26	83
Swage	26	8
Switch, Automatic	23	28
Swivel, Lifting	26	60
Synchronous motor	23	6

T.	Sec.	Page.
Table of flat ropes	23	68
Tail or return sheaves	22	85
" " " " Diameter of	22	89

	Sec.	Page.
Tail-rope couplings	22	67
" haulage calculations	22	58
" " Location of engine for	22	71
" system	22	51
" Operation of	22	53
Tail ropes	23	78
Tanks for water-supply	24	93
Taper rolls	25	108
Taps, Fishing	20	93
Telegraphs	26	11
Temperature in engine cylinder, Range of	23	11
Temper screw	26	34
Tempering	26	13
" Points to be observed in	26	14
Tension cars	22	92
" in haulage ropes	22	50
" " " "	22	59
" " " "	22	107
Test for sulphuric acid	26	56
The influence of the angle of the hole	26	101
Throttle-valve	23	25
Thrust indicators	26	63
Timber and lumber yards	24	105
Tipple arranged for increased dumping capacity	24	84
" Construction of	24	85
" Mitchell	24	68
" Phillips	24	69
" structure and fittings	24	63
" Wilson	24	68
Tips, Cross-over	24	66
" Push-back	24	64
" Revolving or oscillating	24	65
Tongue switch	25	54
Tool house	24	103
Tools for dressing bits	26	8
" String of	26	38
Track materials for rope haulage	22	119
" rollers	22	120
Tracks, Arrangement of, at drifts	24	45
Tracks, Arrangement of, at mine opening below tipple	24	36
Tracks, Arrangement of, at shaft with one landing	24	26
Tracks, Arrangement of, at tipple landing	24	18
Tracks, Car	23	93
" "	24	87
" "	25	53
Tracks for drift mine	24	45
" " gravity-planes	22	5
" Railroad	24	85
" "	25	53
" Yard	24	31
Traction-wheel elevator	25	126
Transfer carriage, Slope	25	75
Tunnel	25	1
Turning moment on hoisting drum	23	20
Turnouts	24	90

U.	Sec.	Page.
Underground haulage by endless rope	22	125
" haulage engines	22	122

V.	Sec.	Page.
Value of record furnished by core	26	75
Value of record furnished by diamond drill	26	75
Valve, Relief	23	26
" Throttle	23	25
Valves of engine	25	23
Velocity and weight in boring, Effect of	26	10
" of haulage ropes	22	64
" " " "	22	106
Ventilating plant	24	32
Ventilation of coal-breaker	25	159
Vertical hoist	25	15
" "	25	63

W.	Sec.	Page.
Walking-beam	26	42
Wash-house	24	108
Washer, Righter	25	93
Washeries, Coal	25	41
Washing plant	24	90
Washings	26	91
Waste and rock banks	25	40
Water car	25	34
" Impurities in	25	55
" Lost	26	91
" Purification of	25	55
" required in mining operations	24	96
" supply for surface arrangements	24	93
" supply for surface arrangements	25	54
Weighing coal	24	76
Weighman's office	24	109
Weight of haulage ropes	22	48

	Sec.	Page.
Weight of haulage ropes relative to velocity...	22	104
" " rails for mile of track.....	22	119
Weights of drills and hammers	26	8
Whiting system of hoisting....	23	43
Wilson tipple.....	24	68
Winding-engines, Requirements of.....	25	19
Windlass	23	1
Wire ropes, Durability of.....	22	112
" " Expansion of, by heat.....	22	92
Wire ropes, how spliced.....	22	113
" " Locked.....	22	110
" " Preservation of...	22	114
" " Weights and breaking loads of	22	111
Wooden tanks.....	24	95
Worthington steam-pump.....	25	24

Y.

	Sec.	Page.
Yard tracks.....	24	31

Z.

	Sec.	Page.
Zehnder brake.....	25	20

MINE HAULAGE.

HAULAGE SYSTEMS.

INTRODUCTION.

2298. Underground haulage, whether done by wire rope or otherwise, is always carried on in two distinct stages. The first or local haulage is done by drawing the cars from the working face to a gathering-up or central station, from which the general haulage begins. From the latter station the loaded cars are hauled in trains to the bottom of the shaft or slope, or out of the drift, as the case may be. To secure economy and despatch, it is necessary that the local haulage be made as short as possible, as this work is generally done by mules, and is more costly than mechanical haulage. For the same reason, the general or mechanical haulage is made as long as possible.

2299. This section deals principally with wire-rope haulage. There are four classes of wire-rope haulage which will constitute the principal divisions of the discussion. They are :

1. Gravity-planes;
2. Engine-planes;
3. Tail-rope systems;
4. Endless-rope systems.

GRAVITY-PLANES.

CONDITIONS REQUIRED FOR SUCCESSFUL OPERATION.

2300. This system of haulage is done by gravitation, and, as far as the motive power is concerned, it might be supposed that it is cheap and economical, but such a conclusion is not always the correct one, for very important reasons, which should be known.

For notice of the copyright, see page immediately following the title page.

A prominent railway company for some years did its coal haulage on the surface by a series of gravity-planes or self-acting inclines. In course of time, it was found that the work between the terminals could be more cheaply done on a properly graded road by steam-locomotive haulage than by gravitation. The reason for this was that many of the incline roads were short, and the number of persons employed on each short incline made in the aggregate a great number; the repeated stoppages for detaching one set of ropes and attaching another entailed a considerable waste of time, and it was found impossible to keep all the inclines running in such accord that the train from one would arrive in time to follow that of another. The result was that the quantity of coal hauled per day was relatively small, being only about one-fourth of what could be hauled by steam-locomotive haulage. It was also found that the cost of ropes, rollers, and the services of the men employed far more than counterbalanced the cost of fuel and other expenses incidental to locomotive haulage. These same conditions occur in the mine, and in the same way the limitations of a costless power sometimes cause stoppages that reduce the output to such an extent that either direct steam-power or transmitted power is found to be better and cheaper. There are conditions under which gravity-planes are cheap and effective, but these are seldom found in the principal or primary haulage, excepting when the self-acting incline haulage is done with an endless rope.

2301. The haulage on self-acting inclines where the pitch is heavy is done with a pair of ropes and a pair of drums, by which arrangement the trains can be kept under perfect control with the brake, as no slipping of the rope on the drums can occur. Where the pitch is light, a single rope is used, in which case the rope is given one turn upon the head-wheel. This is found to be quite sufficient, for under such conditions it is not necessary for the brake to be so tightly applied as to cause the one coil of rope to slip.

2302. Until quite recently, the only self-acting inclines in use were those just noticed, but now self-acting inclines with endless ropes are fast displacing them. Each of the two rope systems is subject to very sharply defined limits, because the rope reaching to the bottom of the incline soon weighs as much as the descending coal, and then the gravity of the coal ceases to supply the required motive power.

2303. For example, if on an incline with 4 per cent. grade, the rope reaching to the foot weighs 2,000 lb., a loaded car 4,000 lb., and an empty car 1,500 lb., the loaded car will not exert force enough to pull the empty car up, for the following reasons :

First, the friction, which amounts to about $\frac{1}{40}$ of the load, must be considered; second, the fact that the descending car balances the ascending car must be borne in mind; therefore, the force is exerted only by the coal in the loaded car.

The resistance offered by the rope is caused by (*a*) its weight, and (*b*) the friction due to its weight. To move the rope up the incline regardless of friction requires $2{,}000 \times .04$, or 80 lb. To this must be added the friction, which amounts to $\frac{2{,}000}{40}$, or 50 lb., making the total force required to move the rope equal to $80 + 50 = 130$ lb.

Now, the force required to move the rope must all come from the weight of the coal in the loaded car. On a 4 per cent. incline the 2,500 lb. would exert a force parallel to the incline equal to 4 per cent. of 2,500 lb., or 100 lb. From this must be subtracted the friction due to both the loaded and empty cars, or $\frac{4{,}000 + 1{,}500}{40} = 137.5$ lb. Now, we know that we can not subtract 137.5 from 100, and, therefore, it is evident that the loaded car is entirely too light to start the empty car and rope from the bottom.

To make the matter more clear, let the grade be 6 per cent., and the weights of rope, cars, and coal be the same as in the previous example. Now, the force required to move

the rope will be equal to $(2{,}000 \times .06) + \frac{2{,}000}{40} = 170$ lb. The pull exerted by the 2,500 lb. of coal will be $2{,}500 \times .06 = 150$ lb. The friction due to the coal and the two cars will be $\frac{4{,}000 + 1{,}500}{40} = 137.5$ lb. This must be subtracted from the 150 lb. to obtain the net force due to the weight of the coal; thus, $150 - 137.5 = 12.5$ lb. Since the coal in one loaded car, under the conditions given, exerts a working force of but 12.5 lb., it is plain that it will be necessary to run several cars in a trip to get force enough to overcome the friction of the rope. As the force necessary to move the rope is 170 lb., it will require in each trip $\frac{170}{12.5} = 13.6$, or 14 cars.

2304. When gravity-planes are run with a pair of ropes, the grade should increase as the length increases. This increase, however, can not always be secured, because we must take a grade as we find it. The length of an incline may be increased until the number of cars in the train can not lift the heavy rope. This conclusion is apparent when it is understood that if the weight of the rope per foot remains the same, and if the length of the incline is double, the number of cars in a train must be doubled. This statement, however, still falls short of the exact truth, for as the number of cars in a train increases in number, the weight per foot of the rope for such trains must also increase, and the result is that gravity-planes exceeding half a mile in length are seldom found, except where the pitch is 30° or more.

It is now clear that for an incline to be self-acting the useful gravity force (or the force that remains after the friction due to the weights of a double train of cars and the load in one of them has been subtracted from the weight that gravitates) must exceed the gravity weight of the rope and the friction due to its weight.

2305. There are cases in the local or secondary haulage of a mine where a gravity-plane is of great value. For

instance, where the working face is advancing up grade, self-acting inclines called "jigs" are adopted. These are self-acting inclines in which a balance-weight is pulled up by the descending full car, and the empty car in turn is pulled up to the working face by the balance-weight, or jig-weight, as it is generally called. In some of these, the loaded truck or jig runs on narrow-gauge rails between the rails of the ordinary track, and in other cases the jig is made to run on a track in a parallel opening. Short, self-acting inclines are also used to advantage in running loaded cars from a counter gangway to the main gangway, driven at a lower level.

DESCRIPTION OF DETAILS.

2306. Fig. 811 shows an ordinary self-acting incline, or one in which the weight of the coal in a loaded train acts as a motive force. At the head of the incline is seen the drum, or reel *A*, around which the ropes wind. When a single drum of this character is used, one of the ropes runs off the top side, and the other runs off the bottom side of the drum; a moment's consideration will explain the reason for this. If both ropes were on one side of the drum, they would both run off or on together, but as they coil on opposite sides of the drum, one runs on while the other runs off.

2307. The incline shown in Fig. 811 is provided with double tracks, to allow the empty trains to pass each other without danger of colliding. Between the rails are seen the rope-rollers *I*, *I*, used to prevent the ropes trailing on the ground. Trains on a self-acting incline begin to accelerate in speed at a point midway in the plane, and after the loaded cars have reached the lower side, instead of the weight of the rope reacting against the gravity force of the coal, it now supplements that force, and the result is an increased speed. Unless something is done to provide for checking the acceleration of the cars, dangers of a manifold

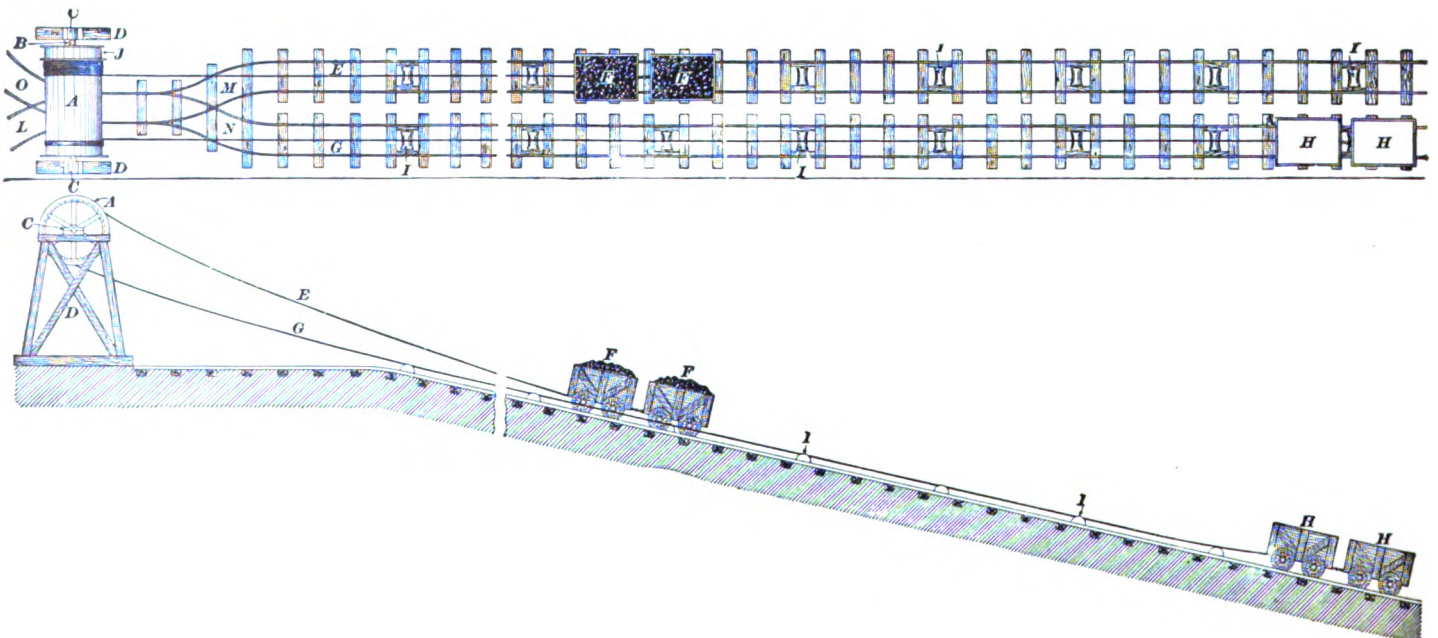

FIG. 811.

character may occur. For this reason, a brake *J* is provided, which is applied by an attendant at the drum. For running the full cars onto the incline and the empty ones off of it, proper branch tracks and switches are necessary. For example, an automatic switch is placed at the head of the double tracks in such a way that the loaded cars, on reaching the top of the incline, may alternately take the tracks *M* and *N*. When the empty train *H H* reaches the head of the incline passing out of the track *N*, it passes on to the empty car line *O*; then two loaded cars passing out of *L* are automatically switched onto *N*, for the empty cars, in passing out of *N*, set the switch for the loaded cars to run onto *N*.

2308. A vertical section of the incline is seen in the lower portion of Fig. 811. The loaded cars are descending at *F F*, and the empty cars are ascending at *H H*. The rope from the top of the reel is attached to the full cars *F*, *F*, and the rope from the under side of the reel is attached to the empty cars *H*, *H*; consequently, the drum, as seen in the end view, is turning in the direction of the hands of a watch; that is, running the rope off the top and running it on at the bottom. The head-frame for carrying the drums is such as may sometimes be seen on the surface, and also in the mine. Grip-wheels and fleet-wheels have in a great many cases displaced the head-frame, but there are cases in thick seams where it is still used with advantage.

2309. Fig. 812 shows an under level grip or fleet wheel, situated under a surface structure. In principle it is the same as the fixings of a grip-wheel under the level of the tracks at the head of an incline in the mine, for there an underground chamber is cut out for the location of the wheel, as shown in Fig. 820. Fig. 812 also illustrates an arrangement of the tracks differing from that shown in Fig. 811. In this case a treble rail is continued to the parting, and from the lower end of the parting to the foot of the incline. In the majority of underground inclines, the arrangement of the tracks is like that illustrated by Fig. 813. In this,

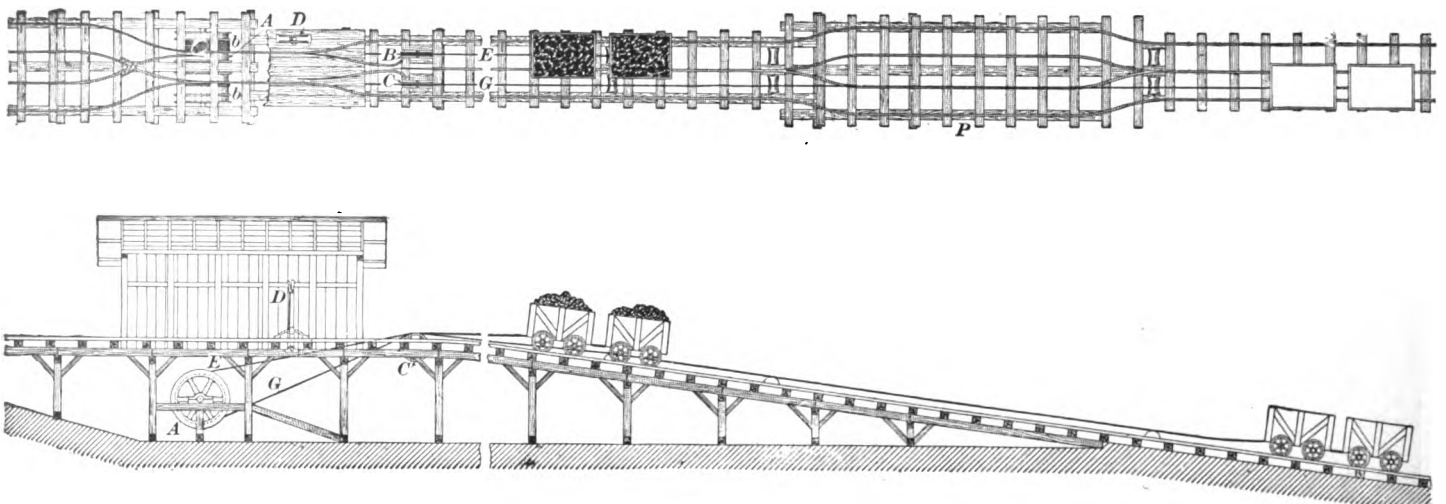

FIG. 812.

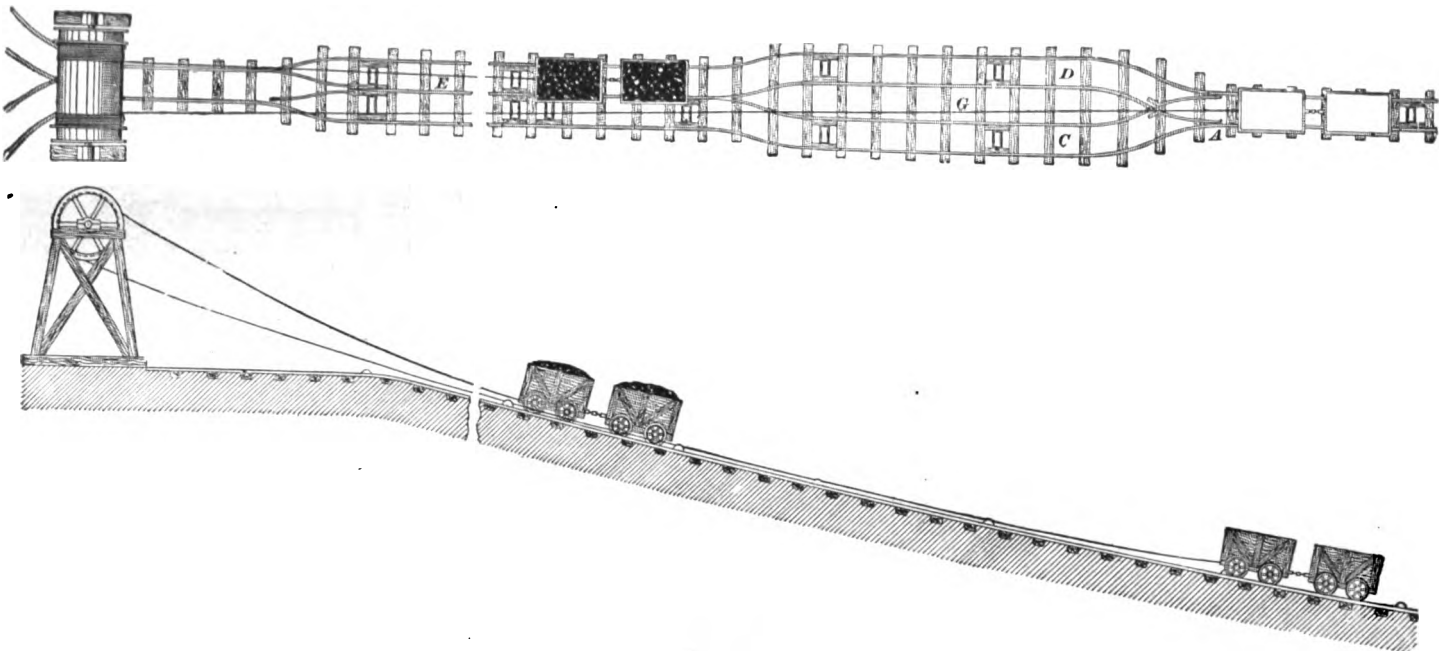

FIG. 813.

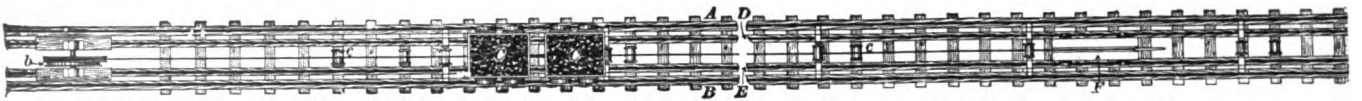

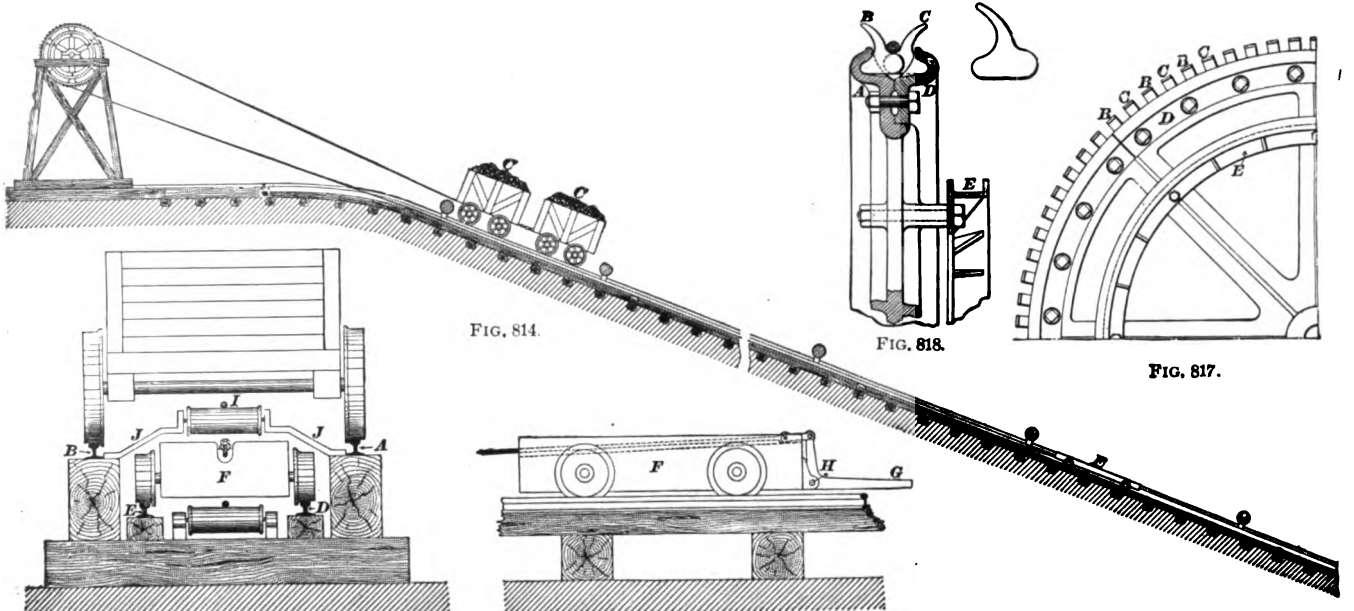

FIG. 814.

FIG. 818.

FIG. 817.

FIG. 815.

FIG. 816.

as in Fig. 812, the treble rails are continued to the partings, but the parting tracks unite in a single one, which is continued to the foot of the incline. These three figures bring before us in a strong light some of the practical difficulties that arise in making tracks for self-acting inclines. In mines where the roof and floor are tender, it is a costly and a difficult matter to keep the roads secure and in good working order, and so much is this the case, that the advantages of gravity-planes must often be disregarded when the conditions will not permit the construction of double tracks.

2310. Timbering should be avoided as much as possible on a self-acting incline, because, in the event of a rope breaking and the cars running away and being derailed, the timber is knocked out and the roof is let down, with the result that a stoppage of work occurs, and great expense is incurred in repairing the road.

2311. Figs. 814, 815, 816, 817, and 818 show some special appliances for self-acting inclines. For example, they show the self-acting jig, in which the full cars *C*, *C* are hauling up the balance-weight *F*. This consists of a cast-iron box running on wheels on a track of small gauge within the wider gauge of the car-track. This may be clearly comprehended by reference to Fig. 815, where the car is seen passing over the balance-truck *F*. In Fig. 814 the loaded cars are shown descending and the balance-truck ascending. To fully comprehend the principles of action involved in this self-acting jig, suppose that the cars have reached the foot of the incline. The man at the top applies the brake; that is, he holds the rope securely with the brake until the loaded cars are detached and a fresh train of empty ones is attached. Then he eases off the brake, and the balance-car is allowed to descend and pull the empty train of cars to the top of the incline. In this illustration the grip-wheel is mounted on a head-frame; but it often occurs in a mine that the grip-wheel is fixed under the level of the road at the head of the incline.

In Fig. 816 a side view of the balance-truck is seen at *F*, with the drop-bar *G* attached to the rope; or, more correctly, the rope is attached to the bell-crank lever at the back end of the balance-car in such a way that when the weight of the truck is hanging on the rope, the lever *G* is elevated, and in the event of the rope breaking or the balance-truck becoming detached, the lever *G* by its weight falls, digs into the ground, and prevents the truck from running down the plane.

2312. A front and end view of a grip-wheel is given in Figs. 817 and 818. In many cases a fleet-wheel, or a wheel with a slight conical tread, on which the coils of rope slightly slip down towards the flange on the lower side, is used instead of a grip-wheel. The grip-wheel, however, has a special advantage which makes it an excellent substitute for a double-rope reel. In case one side of the rope breaks, the grips on the tread of the wheel hold the other side of the rope secure, for the rope is seized by the grips in which it lies. As all the grips surrounding the wheel (as those shown at *B*, *C*, *B*, *C*) act independently of each other, the rope is held as securely as it would be by a reel on which was coiled separate ropes. The grips, it will be seen, are fixed on the periphery of the wheel like so many teeth; one of them is shown in transverse section at *B*, *C*, Fig. 818.

B and *C* are called the jaws of the grip. The rope presses in between them, and in doing so the jaws distend at the bottom and close at the top until the rope is held as in a vise. There are many varieties of jaw actions for grip-wheels, but this is a truly representative one. For self-acting inclines in mines where the pitch of the road is comparatively small and the length of the incline is short, head-wheels are sometimes laid in a horizontal position, under the road, at the head of the incline. In such a case, the diameter of the wheel is made about equal to the distance from center to center between the full and empty tracks. Such a wheel, however, is seldom a grip-wheel, but the groove in which the rope runs is made in the form of an acute angle, so that

the rope fixes itself and grips on the sides of the two enclosing flanges. The wheel carries on one of its sides a brake-flange, so as to keep the running cars under control. Sometimes, however, where the pitch is considerable, separate reels, connected by gear-wheels, as shown in Fig. 819, are used to provide such a lead for the ropes as will not tend to lift the cars off the tracks in coming onto and leaving the top of the incline. When they are set overhead, the running-on and the running-off ropes both come from the under sides of the drums or reels. The one-sided lead of the ropes is caused by the gear-wheels, for these make them turn in opposite directions. These drums may be set under the tracks at the head of the incline with great advantage, if the pitch is considerable and the trains and ropes are heavy. Such an arrangement prevents the excessive bending of the ropes in passing over the head-sheaves; that is, the ropes running off the tops of the reels when set under the tracks make a smaller angle with the line of the haulage-rope than when one of the ropes comes from the under side of the drum. The advantage of these reels, then, may be summarized as follows: When they are set above the tracks, the lead of the ropes is never too high, and when they are set under the tracks the lead of the ropes running on and off the reels is never too low.

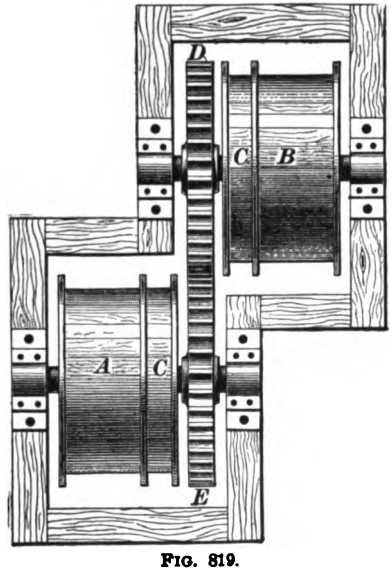

FIG. 819.

2313. The necessity of using deflecting sheaves is plainly shown in Fig. 820. Here two deflecting sheaves must be used, as shown at *E* and *E*. The advantages of

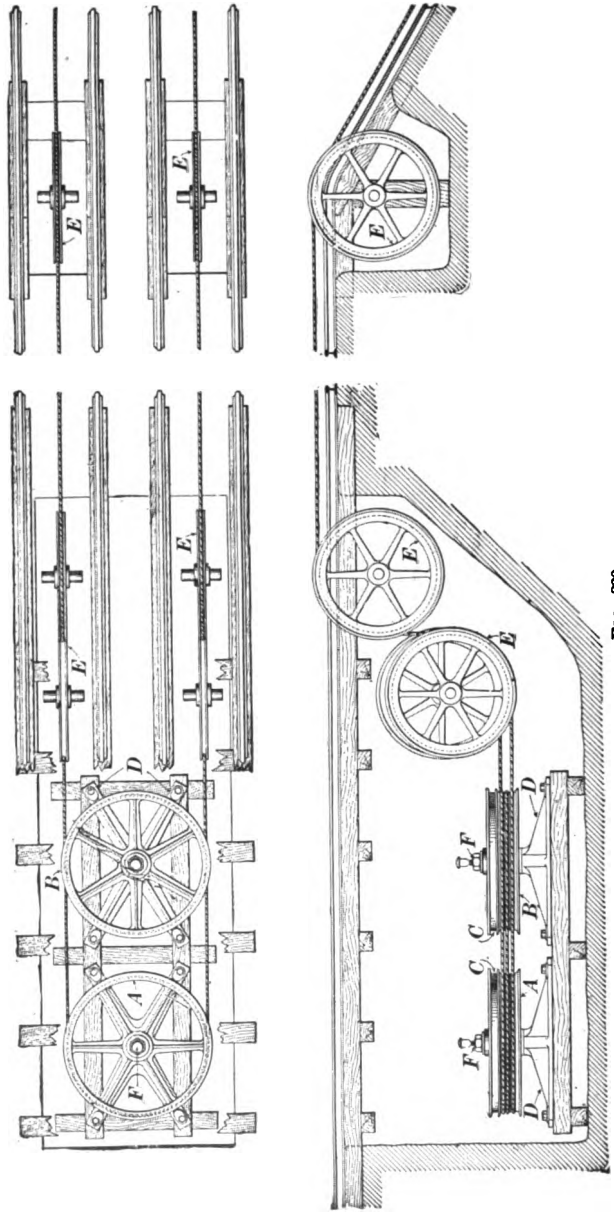

FIG. 820.

grooved sheaves, such as those at *F*, *F*, can not be doubted, for by them the trains on steep inclines can be held as securely with the brake as they can be with drums; however, the damage to the ropes, in suddenly bending them round comparatively small deflecting sheaves, must not be overlooked.

2314. The grooved wheels seen at the lower portion of the figure constitute a most ingenious device for holding heavy trains on an incline. To understand, however, the importance of the two grooved wheels for holding or hauling, an explanation of their construction and mode of action must be made. By referring to Fig. 821, it will be seen that the tread of the periphery of the wheel is made semi-elliptical in section, and the rope is made to run on at the high side of the curve *r*. After a complete coil has been made, the running-on coil and the coil on the left of it begin to surge down onto a lesser diameter; consequently, the coils are always surging over towards *s*, or, as the rope runs on, it keeps gently surging or fleeting downwards until it at last begins to jam on the other side of the curve, as at *o*, the place at which the rope runs off. The disadvantages of the fleet-wheel are, that the surging is not continuous, but intermittent, and the rope jumps and thuds and checks, thus causing considerable wear and tear. When the rope runs on, it is arrested by the flange *A*, and presses and produces the surging or fleeting of the coil on the left of it. Sometimes, however, the intermediate coil slips down onto the middle of the tread, and then a longer interval elapses before the coil *r* presses against the flange of the wheel again, when another knock and surge takes place, and so on, continuously. From this, it is clear that it is impossible to run a rope into the grooves on a single wheel, for, after two or three revolutions, the rope will roll up against the flange and jam there, so that the adjacent coils can not fleet or surge away, and the action of the wheel will be arrested. Two wheels, however, can be used so as to take

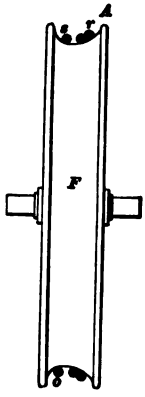

FIG. 821.

the place of one, by taking semicircular coils round each of them, or using the two wheels like belt-wheels. This converts the coils that would otherwise envelop a single drum into belts on two drums in such a way that, if we denote the wheels by A, B, C, and A_1, B_1, C_1, respectively, the rope passes half round A, and from A to A_1; then from A_1 to B, and after passing half round B, to B_1, and after passing round B_1, to C, and after moving half round C, to C_1; finally, after passing half round C_1, the rope proceeds onwards to the haulage.

2315. All that has been said so far relative to a description of the grooved wheels and fleet-wheels of an endless-rope haulage is important and worthy of attention, but there are other things that should be known, and not the least of these is the following:

When ropes are coiled around surfaces of any kind, particularly around wheels, what is called the *hold* or *grip* of the rope increases directly as the square of the number of coils. If there are two coils on a fleet-wheel, the grip or hold of these two coils is 4 times that of one coil, and if there are three coils, the grip is 9 times that of a single coil. The same law holds true with the grooved wheels, for, although there are two wheels, three half coils on each wheel are equal to three whole coils on one. Therefore, when the double wheels are connected by rope belts, as in this case, the friction obeys the same law as that of complete coils, and, consequently, the two wheels shown in Fig. 820, having three grooves each, secure a grip or haulage power of 9 times that of a single coil round one wheel.

2316. The mechanical appliances for the successful working of self-acting inclines, such as reels, grip-wheels, rollers, switches, brakes, etc., etc., are important from a purely engineering point of view, and the best of these in the market can be purchased of manufacturers who make a specialty of them. What is directly important to the mining engineer, as distinguished from the mechanical engineer, is the grading of the roads for self-acting inclines. It is true that what is required to be done is of a comparatively

elementary character, yet the principles involved must be understood, to have their true value appreciated.

2317. In Fig. 822 (*T*) the broken line shows a uniform grade whose angle is equal to *B A C*. It is possible that this uniform grade may be a complete failure, because the weight of the descending coal may not be sufficient to lift the weight of the long, heavy rope and overcome the friction due to the drum, rollers, rope, and cars, and yet the same incline might

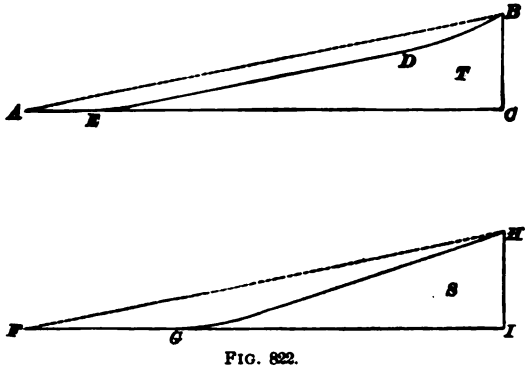

FIG. 822.

be made a complete success by so altering the grade as to give it an increased fall at the top and a reduced fall at the bottom. For example, by altering the uniform grade *A B* to the varying grade *A E D B*, the gravity power of the coal is increased until the loaded train has reached the point *D* and the empty train has reached the point *E*, at which position they will have sufficient velocity or momentum to carry them to the point of parting. Then, as the trains move on, the rope attached to the full cars will so lengthen and the rope attached to the empty cars will so shorten as to make the rope not only move by its own counterpoise, but to make it also assist the gravity power of the coal. Although the trains have acquired such a high velocity as to run the empty cars from *D* up to *B* and the full cars from *E* to *A* by their inertia, the velocity of the empty train, on reaching *B*, and the velocity of the full one, on reaching *A*, is so low as to require no brake-power to unduly strain the ropes. From this it will be noticed that

to make the grade of an incline successful where it otherwise would fail, the inclination must be increased at the top and reduced at the foot of the incline.

2318. In Fig. 822 (*S*) is shown a case where the fall can not be increased immediately from the top, but the pitch is sufficient to run the trains a considerable distance from the foot of the incline *G* on a dead level. Very excellent work may be done in this way. By lengthening the run, the length and weight of the rope are correspondingly increased. As the train leaves the top, it is prevented from being unduly accelerated at the first portion of the run; as the empty train must run a considerable distance from *F* to *G* on a dead level, the momentum acquired becomes sufficient to run the full train at the end of the run along the level from *G* to *F*, and to run the empty train up to and over the top *H*.

2319. The manifest drawback to the extension and rapid action of self-acting inclines on small pitches is the weight of the rope. If this factor could be eliminated, it is easy to see that the incline could be prolonged indefinitely; and it so happens that this can be done by applying the principle of the endless-rope haulage. Inclined planes run by an endless rope have been successful for very long distances on the surface, and in some cases in mines, but for local or secondary haulage in certain places, jigging with a balance-car will be found very effective.

2320. A description of the mechanical appliances necessary in fitting up a self-acting incline is only important to mining students in so far as their mode of action is concerned. The principles of their construction belong to the mechanical engineer; therefore, it is only necessary that somewhat brief attention should be drawn to them. Beginning at the head of the incline, attention is first called to brakes. These are somewhat varied in construction, but the mode of action of all is alike. There are only two general varieties; namely, simple brakes for inclines of small pitch, on which the cars never attain a very high velocity, and brakes for holding greater loads on greater pitches, where the cars

attain high velocities. A brake of the former kind is shown in Fig. 823. Its mode of action is that of a friction-block

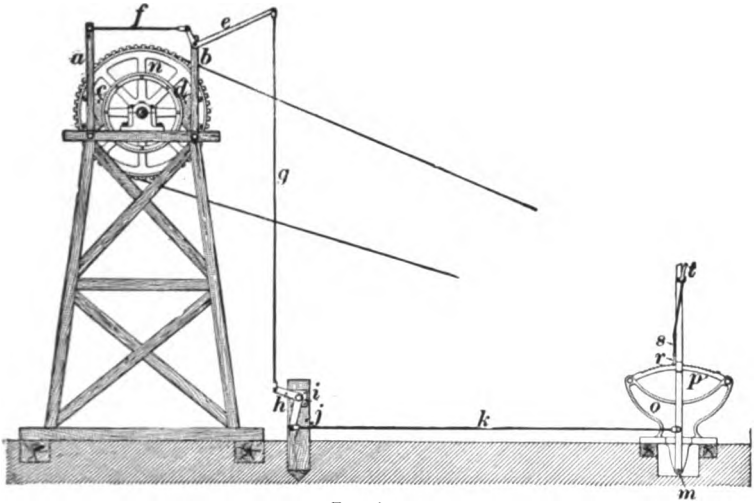

FIG. 823.

such as is found on railway freight-cars. The blocks *c*, *d* are attached to upright levers *a* and *b*, and they are put into action by a series of levers and rods *e*, *g*, *h*, *j*, and *k*. The lever by which the brake is applied is seen at *t m*. This example is fairly representative of brakes for grip-wheels mounted on a standard frame. In mines, however, the grip-wheel is usually fixed underneath the tracks. Brakes of greater holding power are required on inclines of high pitch, and a representative one is shown in Fig. 824. The flange of the brake-

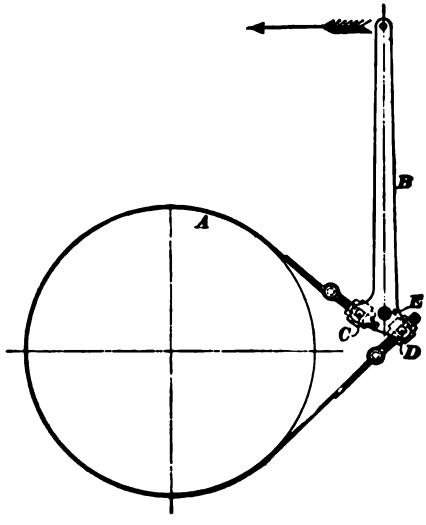

FIG. 824.

wheel is seen at *A*, and is surrounded with the brake-strap which connects with the two short arms of the lever *B*. A brake of this kind is very powerful, and will hold securely a very heavy train.

INCLINATION OF GRAVITY-PLANES.

2321. For gravity-planes to act with safety and economy, the following three important points must be considered:

1. Where the pitch is considerable and the length is short, only a minimum number of cars can be made to run in a train, or otherwise a heavy and expensive rope must be used, and powerful friction-brakes are required to hold the trains securely.

2. When the inclination is considerable, and the plane is a long one, the trains must be made larger to lift the heavy rope, whose increased weight is due to the relatively great length of the plane. Under these circumstances, a powerful brake is indispensable, because, after the loaded cars have passed the parting, the weight of the ropes adds considerable to the gravity of the coal, and, as a result, a powerful brake and a correspondingly heavy rope are required.

3. When the inclination of a gravity-plane is comparatively small, long trains are imperatively necessary; and even then it is necessary to provide, as has been previously shown, an increased fall from the top of the incline and a reduced grade at the foot of the incline, to run off the work with sufficient velocity.

2322. Gravity-planes have been sources of so much trouble and disappointment to those engaged in making them and using them, that it is necessary that the underlying principles should be understood to avoid such mistakes as sometimes are made, in the absence of proper knowledge, of how the earth's attraction becomes the operative force on self-acting inclines. This may be made very clear by a plain statement of facts.

First, the motive force is generated by something falling, and that something falling is the coal in the loaded cars.

Second, the force must do work in overcoming two kinds of resistances; namely, the friction common to the cars, rollers, sheaves, ropes, and coal, and the lifting of the weight of the rope attached to the empty cars at the commencement of the run. The lift in the latter case increases with the length of the plane, and, as has been shown, the rope may become so heavy as to neutralize or counterpoise the weight of the falling coal, and thereby render necessary long trains, or the abandonment of the gravity-plane and the substitution of power haulage.

2323. It is essential that some simple, yet important, calculations should be made to determine when a gravity-plane will be safe and successful in doing the local or general haulage in a mine. The calculations referred to should enable the student to find two results: first, the minimum number of cars in a train that will run with sufficient speed to do the required work, and, second, the maximum length and minimum pitch of a gravity-plane that will act efficiently.

Before proceeding, however, with an explanation of the methods of making the required calculations, it is necessary that the student should understand how the mechanical movements of the power and the work are related to each other.

2324. To understand this matter, the following general definitions are necessary:

1. *The forces on inclines are inversely proportional to the distances through which they move for a given amount of fall.* For example, suppose a body has to move down an incline through a distance of 100 feet to fall a vertical distance of 8 feet; then the force required to support this body on the incline is only equal to eight one-hundredths of its weight. If the body weighs 80 pounds, the force is $\frac{8}{100} \times 80 = 6.4$ pounds.

2. *The forces on inclines are inversely proportional to the lines along which they act when those lines are parallel to the direction of the movements of the balancing bodies.* For

example, in *A*, Fig. 825, the body or weight *L* is moving up or down the incline *a b*; therefore, the force that moves it is acting along the line *g h*, which is parallel to *a b*. Again, the balance-weight *W* is moving in a line *r s*, and this is parallel to the vertical line *b c*. Since *b c* is one-half of the length *a b*, if *L* weighs 120 pounds, *W* must weigh 60 pounds, because $\frac{b\,c}{b\,a} = \frac{1}{2}$. This is true when the velocities of *b c* and *b a* are equal, and when the force moving *L* is parallel to the direction in which *L* moves, assuming that the balance-weight *W* falls through a distance equal to that through which the load *L* moves along the incline.

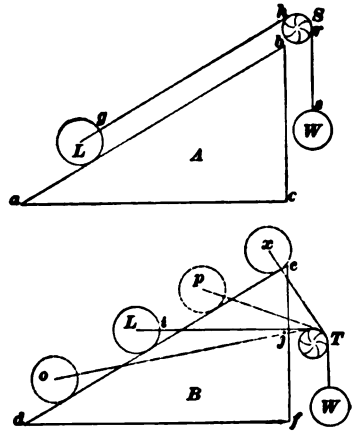

FIG. 825.

Perhaps matters of this kind are better understood by contrasts; therefore, suppose that the force moving the weight *L* does not act along a line that is parallel to the direction in which the load moves. In *B*, Fig. 825, the load is moving from *d* to *e*, and the force is then acting along the line *i j*. The force then acting along the line *i j* must be greater than the force acting along the line *g h* in the diagram *A*, because *d f* is shorter than *d e*, and we know that the forces in this case are inversely proportional to the lines along which they act. (See the *Inclined Plane* in Mechanics.) Again, if the load *L* is in the position *x*, the weight *W*, if infinite, can not move the load higher up the incline, because the force is acting through a cord whose direction makes a right angle with the direction of the incline. Therefore, an infinite force can not move the body, because the reaction of the incline is as great as the action of the force. It is thus seen that the forces on inclines must be taken as acting parallel to the lines along which the weights or forces act.

3. If the weights are equal, that is, if the weight moving along a vertical line is equal to the one moving along an incline, to balance each other, their velocities must be proportional to the lines along which they move; that is, the weight L, Fig. 825, A, will have to move from a to b in the same time that W moves from b to c.

A careful study of these three definitions will remove all perplexity concerning the balancing forces on an incline.

2325. Above all other considerations, there are two that stand out in bold relief in relation to gravity-planes. These are:

1. The inclination must be sufficient for trains of reasonable size to run off the work.

2. There must be a sufficient number of cars in a train on a given incline to overcome the weight of the rope on a given length of plane.

2326. It is first necessary to show how to find the number of cars in a train under the given conditions. To make the reasoning clear, let the following letters represent the given and required values:

W_1 = the weight in pounds of the descending loaded car;
W_2 = the weight in pounds of the ascending empty car;
W_3 = the weight of the hauling-rope in pounds;
a = the percentage of the grade expressed decimally, which is the same as the sine of the angle of inclination;
$\frac{1}{10}$ = the coefficient of friction;
W = the required number of cars in a train.

The force required to overcome the resistance due to the weight of the rope is equal to $a\ W_3$.

The force required to overcome the resistance due to the rope, rollers, and drums is equal to $\frac{W_3}{40}$.

Denoting the total force required to overcome the weight and friction of the rope by F_2, we have

$$F_2 = a W_2 + \frac{W_2}{40}. \qquad (197.)$$

EXAMPLE.—A rope 2,000 feet long weighs 4,000 pounds, and the inclination of the plane on which it is used is equal to a grade of 8 per cent. What force is required to move the rope?

SOLUTION.—Applying formula **197**, we have

$$F_2 = a W_2 + \frac{W_2}{40} = (.08 \times 4{,}000) + \frac{4{,}000}{40} =$$

420 pounds, the tractive force required.

2327. To find the available gravity force for overcoming the required tractive force of the rope, observe that on a self-acting incline, for every load of coal two cars are required, and as the cars and load can not move without being subject to the resistance of friction, the following equation expresses the amount of this resistance:

$$\frac{W_1 + W_2}{40}.$$

Again, as the cars balance each other on an incline, nothing falls but the load, but all of the load is not available for overcoming the tractive force required to move the rope, for the friction due to the cars and the load must be subtracted from the gravity force of the coal, in order to find how much force each pair of cars can supply to move the rope.

Denoting the total gravity force due to the coal by F_1, we have

$$F_1 = a (W_1 - W_2). \qquad (198.)$$

Again, denoting the available gravity force due to the coal by F, we have

$$F = a (W_1 - W_2) - \left(\frac{W_1 + W_2}{40}\right). \qquad (199.)$$

EXAMPLE.—A gravity-plane has a grade of 8 per cent.; it is 2,000 feet in length, the rope attached to the empty cars at the foot of the

incline weighs 4,000 pounds, a loaded car weighs 4,000 pounds, and an empty one weighs 1,800 pounds. What is the number of cars that must run in a train to overcome the resistance of the rope at the start of the run?

SOLUTION.—Applying formula **197**, we have

$$F_2 = a\ W_2 + \frac{W_2}{40} = (.08 \times 4{,}000) + \frac{4{,}000}{40} =$$

420 lb., the force required to move the rope.

Applying formula **199**, we have

$$F = a(W_1 - W_2) - \frac{(W_1 + W_2)}{40} = .08\,(4{,}000 - 1{,}800) - \frac{(4{,}000 + 1{,}800)}{40} =$$

31 lb., the available gravity force due to one pair of cars.

Therefore, the number of cars that must run in a train is equal to

$$\left(a\ W_2 + \frac{W_2}{40}\right) + \left[a\,(W_1 - W_2) - \frac{(W_1 + W_2)}{40}\right] = \frac{420}{31} = 13.54 +;$$

or, 14 cars in a train. Ans.

EXAMPLE.—The grade of an incline is 7 per cent., the length of the incline is 2,000 feet, the weight of the rope is 4,000 pounds, the weight of a full car is 4,000 pounds, and that of an empty one is 1,800 pounds. How many cars must there be in a train for the plane to be self-acting?

SOLUTION.—Applying formula **197**, we have

$$F_2 = a\,W_2 + \frac{W_2}{40} = (.07 \times 4{,}000) + \frac{4{,}000}{40} =$$

380 lb., the tractive force required for the rope.

Applying formula **199**, we have

$$F = a(W_1 - W_2) - \frac{(W_1 + W_2)}{40} = .07\,(4{,}000 - 1{,}800) - \frac{(4{,}000 + 1{,}800)}{40} =$$

9 lb., the available force of the load.

Therefore, the number of cars in a train will be equal to $\frac{380}{9} = 42\frac{2}{9}$, or 43 cars. Ans.

EXAMPLE.—The grade of an incline is 6.6 per cent., the length of the road is 2,000 feet, the weight of the rope is 4,000 pounds, the weight of a loaded car is 4,000 pounds, and that of an empty one is 1,800 pounds. How many cars must there be in a train for this incline to be self-acting?

SOLUTION.—Applying formula **197**, we have

$$F_2 = a\,W_2 + \frac{W_2}{40} = (.066 \times 4{,}000) + \frac{4{,}000}{40} =$$

364 lb., the tractive force required for the rope.

Applying formula **199**, we have

$$F = a(W_1 - W_2) - \frac{(W_1 + W_2)}{40} = .066 \times (4{,}000 - 1{,}800) - \frac{(4{,}000 + 1{,}800)}{40} =$$

.2 lb., the available gravity force due to the load.

Therefore, the number of cars in a train is equal to $\frac{364}{.2} = 1{,}820$ cars. Ans.

It is plain, however, that such a number could not be made to act in practice, for observe the absurdities involved in a case like this. The plane is only 2,000 feet in length, and if the cars were each 7 feet long, then the length of a train of cars would be equal to $1{,}820 \times 7 = 12{,}740$ feet, or a train would be $\frac{12{,}740}{2{,}000} = 6.37$ times the length of the incline.

2328. The self-acting incline that must next engage attention is the jig system. As has been shown, the jig or balance-carriage runs on a narrow-gauge track within the car-track, or it is made to run in a parallel opening. The weight of the jig is equal to that of an empty car plus half the weight of the coal a full car carries. The result is, that when a loaded car descends the incline, only half the weight of the coal it carries is available for gravity force, because the other half of the weight of the coal does the gravity work of raising the jig. The excess of weight in the jig does the work of raising the empty car. As only one-half of the weight of the coal does gravity work during the descent of the coal, and the other half does work in the hoisting of the jig, it is only on inclines of high pitch and relatively short length that the jig system can be adopted.

EXAMPLE.—The grade for a jig incline is 20 per cent., and the length of the road is 200 feet. The weight of the rope per foot of length is 1.2 pounds, the weight of a full car is 4,000 pounds, the weight of an empty one is 1,800 pounds, and the weight of the jig is 2,900 pounds. Prove that this jig incline can not be self-acting.

SOLUTION.—Applying formula **197**,

$$F_2 = a\,W_2 + \frac{W_2}{40} = .20\,(200 \times 1.2) + \frac{200 \times 1.2}{40} = 54 \text{ lb.},$$

the resistance to be overcome in moving the full length of the rope.

Consider the conditions existing when the loaded car is at the top and the jig is at the bottom of the plane. The jig can be considered as an empty car weighing 2,900 lb.; applying formula **199**,

$$F = a(W_1 - W_2) - \frac{(W_1 + W_2)}{40} = .20\,(4{,}000 - 2{,}900) - \frac{(4{,}000 + 2{,}900)}{40} =$$

47.5 lb., the available gravity force at the descent of the full car.

Therefore, the jig incline can not be self-acting, because there are only 47.5 pounds of gravity force available to overcome a resistance of 54 pounds.

One thing, however, can be done, and that is, a level run of 30 feet can be made at the foot of the incline, which will give the loaded car on the one hand and the jig on the other sufficient force to overcome the initial and succeeding resistance. For, at the start of the run, the jig or the empty car does not offer any gravity resistance, since it is on the level run. In consequence, the gravity force is increased in the following large proportion: The weight of the jig is 2,900 pounds; therefore, a force of $.2 \times 2{,}900 = 580$ pounds is required, apart from the traction due to friction, to move it up an incline having a 20 per cent. grade. Here, then, can be seen the great advantage due to the right method of making a level at the foot of an incline to neutralize the resistance due to the weight of the rope at the beginning of the plane. As stated before, the weight of a jig is usually equal to the weight of the empty car plus one-half the weight of the coal it can carry.

EXAMPLE.—A self-acting jig incline is in all respects the same as the last, excepting the grade, which is in this case one of 10 per cent. Prove that it will be self-acting when a short level is provided for the start of the jig or empty car before it begins its ascent.

SOLUTION.—Applying formula **197**,

$$F_2 = a\,W_2 + \frac{W_2}{40} = .1 \times 240 + \frac{240}{40} = 30 \text{ lb.} =$$

the resistance to be overcome in moving the rope.

Applying formula **199**,

$$F = a(W_1 - W_2) - \frac{(W_1 + W_2)}{40} = .1\,(4{,}000 - 2{,}900) - \frac{(4{,}000 + 2{,}900)}{40} =$$

$110 - 172.5 = -62.5$ lb. = the available gravity force when the grade is uniform to the bottom of the incline. This negative result shows that the incline can not act. But if the jig commences its journey for the

ascent of the incline along a level, the resistance due to the ascent of the jig is reduced by $.1 \times 2{,}900 = 290$ lb.; hence, $(110 + 290) - 172.5 = 227.5$ lb., and as the resistance of the rope due to gravity and friction is only 30 lb., the self-acting jig incline will act most efficiently, because, after allowance has been made for all resistances, there remains an excess of force equal to $227.5 - 30 = 197.5$ lb.

2329. The determination of the size of a rope for the working of a self-acting incline is best done by first assuming that a rope of a given size and weight will answer, and then finding the tension due to the movement of the rope. If the tension found is too much for the rope, then a heavier one must be assumed and tested.

EXAMPLE.—Required the tension in a rope under the following conditions: A loaded car weighs 4,000 pounds, an empty one weighs 1,800 pounds, there are 10 cars in a train, the grade is one of 8 per cent., the length of the incline is 1,900 feet, and the weight of the rope per foot of length is 1.2 pounds. What is the tension in the rope at the moment the loaded trip leaves the top of the incline?

SOLUTION.—Let T equal the tension in the rope. Then,

$$T = \frac{(10\,W_2 + W_3)}{40} + a(10\,W_2 + W_3).$$

The weight of the rope is equal to $W_3 = 1{,}900 \times 1.2 = 2{,}280$ pounds.

Then, $T = \frac{(10 \times 1{,}800 + 2{,}280)}{40} + .08\,(10 \times 1{,}800 + 2{,}280) = 2{,}129.4$ lb. Ans.

As the working load of this plow-steel rope is 7 tons, it appears to be too heavy, but really the jerking strains to which such ropes are subjected render it necessary that the rope should be 7 times as strong as the calculated quiet load.

AUTOMATIC SWITCHES.

2330. Every gravity-plane on which the descending loaded cars raise the empty ones should be provided with an automatic switch at the head of the plane. There are two general types of switches for this purpose; both are called automatic switches, although, strictly speaking, only one is automatic, the other requiring the attention of the runner. In Fig. 826 is shown an automatic switch consisting of three tongues a, b, and c, pivoted to the rails as shown. To the tongue a is hung a weight w, in

consequence of which it is always kept closed; i. e., kept against rail *d*. With the tongues arranged as shown in the figure, the loaded cars coming from track *A* force open the tongue *a*, as shown by the dotted lines, and pass over the track *B*, where they may be let down the incline, the tongue being closed by the weight *w* after the cars pass over. The cars coming up the slope on empty track *C* open the tongue *c* and close tongue *b*, as shown by the dotted lines. These tongues always remain in the position placed by the last train of empty cars run over them. On the next trip, the loaded cars from track *A* pass over to track *C*, where they may again be let down the slope, and the empty cars coming up the slope on track *B* move the tongues *b* and *c* to their original position, and pass on to track *D*. The above operation is then repeated, the loaded cars taking alternately the tracks *B* and *C*, and the empty ones always the track *D*.

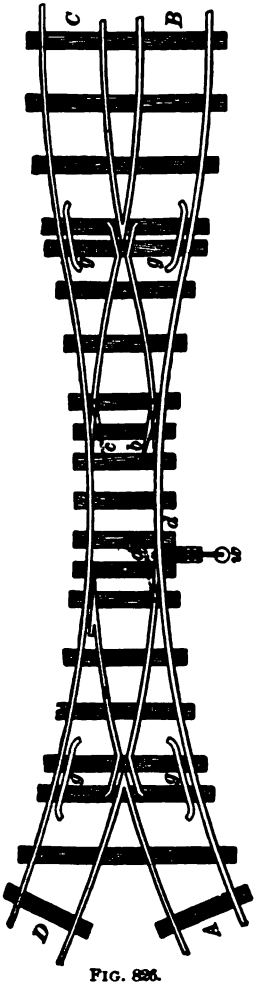

FIG. 826.

2331. In those gravity-planes in which three rails are used from the head of the slope to the parting, and only two from the end of the parting, an automatic switch must be placed at the junction where the two rails unite with the parting. In Fig. 827 is shown an automatic switch, which may be used at such a place. Here two timbers *A* and *B*, pointed at the ends and bound with iron, are pivoted at *C* and *D*, respectively, in such a manner that they may move freely over the tops of the rails.

With the timbers in the position shown, the empty cars coming along track *E* will be pulled up the slope on track *F*, while the descending loaded cars coming down the slope on track *G* will shift the timbers over the rails to the position shown in dotted lines, and go along track *E*. At the next trip the empty cars coming along track *E* will be pulled up the slope on track *G*, while the descending loaded cars coming down the slope on track *F* again shift the timbers to their original position. The above operation is then repeated, the empty cars being pulled alternately up the tracks *F* and *G*. Blocks of wood or iron *a*, *a*, *a* are securely fastened to the ties, to prevent the timbers from moving too far; the timbers being thus blocked, serve for guide-rails, to guide the wheels of the cars to their respective tracks.

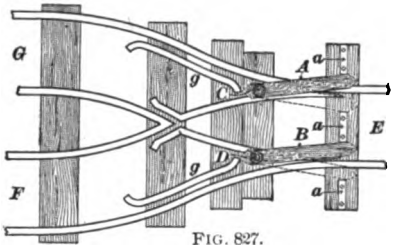

FIG. 827.

SAFETY-BLOCKS.

2332. At the head of the slope near the brink on all gravity-planes should be placed an arrangement called a **safety-block,** for preventing the cars from descending the plane before they are properly attached to the rope. There are various forms of these blocks in use, differing in construction of their details, but representing only one principle in all; namely, that of providing an obstruction, either over the rails or in the center of the track, to prevent the cars from passing, and of removing this obstruction when the cars are to be let down the slope.

2333. One of the best forms of safety-blocks is shown in Fig. 828, in which *A* and *B* are two timbers pivoted at *C* and *D*, respectively. The end of each timber is shaped as shown, and iron-bound. Directly in the center between these timbers is fastened an iron plate *E* having a slot in it through which the vertical part *F* of the rod *G* may be moved back and forth. The timbers *A* and *B* are connected

by two wrought-iron links *H* and *I*, which form a toggle-joint, as shown. The ends of these links, meeting in the center, are fastened to the end of the rod *F* projecting up through the slot in the plate *E*. *J*, *J* are wrought-iron levers placed on the outer sides of the track close to the rails. These levers are pivoted at *K*, and are connected together by a rod *L*, at the center of which the rod *G* is so fastened that when either of the levers is moved the other moves with it. The operation of this arrangement may be explained thus: With the timbers in the position shown, a train of loaded cars coming along track *M* takes track *N*,

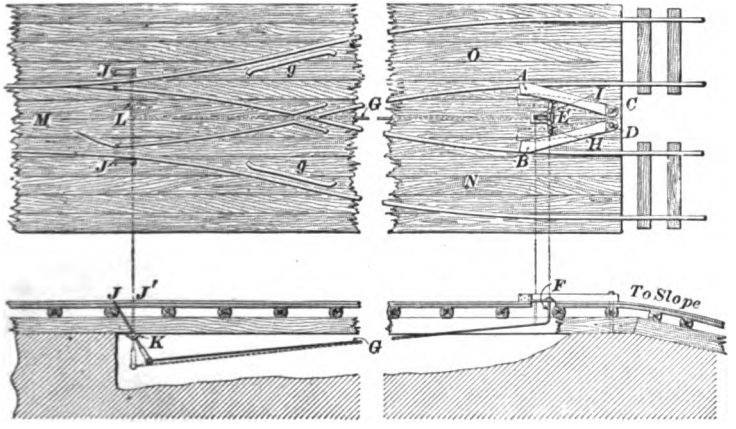

FIG. 828.

and goes along until the wheel on the inner rail of the front car strikes the timber *B*. After the rope has been attached to the cars, the runner shifts either one of the levers *J* to the position *J'*, shown by the dotted lines. In doing this, the rod *G* is pulled to the left, the vertical part *F* of it sliding in the slot of the plate *E* to the left also, which causes the ends of the links *H* and *I* fastened to it to go with it, thereby causing the blocks *A* and *B* to take the position shown by the dotted lines. The tracks being thus freed, the cars may be let down the slope. The empty cars coming up the plane on track *O* pass along until the first car reaches the

lever J on the outside of this track, which is now in the position J' shown by the dotted lines, and moves it to its original position J, in passing to track M, thereby again placing the timbers A and B over the tracks. On the next trip, the loaded cars coming along track M take track O, and are prevented from descending the slope by the timbers being placed over the inner rails by the last train of empty cars. After the rope has been fastened, the timbers are again moved to the dotted position by one of the levers J, and the cars may then be let down the slope. The empty cars coming up this time on track N pass along until the front car reaches the lever J on the outside of this track, which is again in the position J' shown by the dotted lines, and moves it to its original position in passing to track M, thereby again placing the timbers A and B over the tracks. This operation is repeated every trip, the empty cars coming up the plane and automatically placing the timbers over the rails, to prevent the loaded ones from descending the plane.

2334. In Fig. 829 is shown another good form of a safety-block, consisting of a heavy wrought-iron bar A firmly keyed on a shaft B, that is held in position by the bearings C, C, which are bolted to suitable supports. The top of the front end a of the bar is inclined, as shown in the figure, and is caused by the weight W to project up in the center of the track to such a height that it will strike the axle of the cars, this height being governed by the timber H. At one end of the shaft B is keyed a lever D (placed at one side of the track) by which the block is operated. One of the blocks is placed in the center of each track. With the tongues of the switch in the position shown, the loaded cars coming along track E take track F, and run along it until the front axle of the first car strikes the projecting part a of the bar A. After the rope has been attached to the cars, the lever D is pulled to the right, which causes the projecting part a to swing down, when the cars may be let down the slope. The projecting part a should be held down until all the cars have passed over it

the lever D is then released, and the part a is again brought up to its proper height by the weight W. The train of empty cars coming up the slope on track G finds the block in the position shown, the axles forcing the projection a down, which may be readily done, since it is inclined, and the train passes over to track E. After the cars have passed over it, the projection a is again brought up by the weight W to its original position, as shown. On the next trip, the loaded cars coming along track E will run along track G until the front axle of the first car strikes the projection a, and may then be lowered, after the ropes have

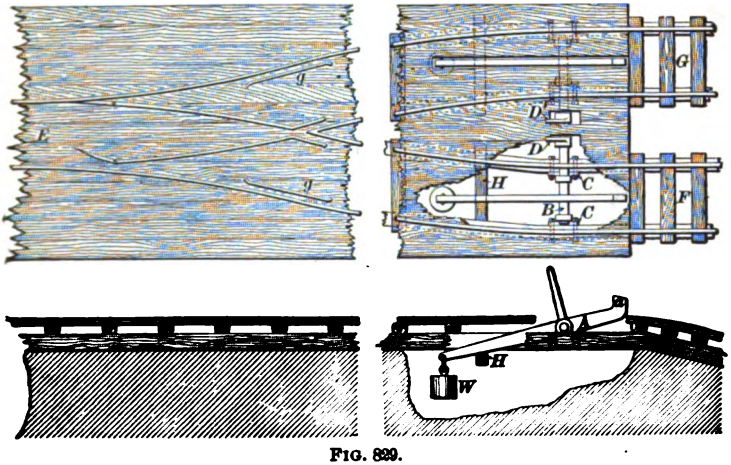

FIG. 829.

been fastened to them, by pulling the lever D' to the right, and holding it until the last car has passed down the plane. The empty cars this time, after coming up the plane on track F and depressing the projection a as before, pass along track E, after which the projection a is again brought to its original position by the weight W. This operation is then repeated, the loaded cars being let down the slope alternately on each track by pulling either the lever D or D', and the empty cars coming up the slope depressing the projection a. When this block is used, it is impossible for the cars arriving at the head of the slope to run down the plane against the will of the operator, since they are always in the proper position to prevent the cars from passing.

2335. In Fig. 830 is shown another safety-block which may be used on gravity-planes where light loads are run. This consists of two iron-bound timbers A and B, pivoted at C and D, respectively, in such a manner that the timber A can be swung over the top of the rail. One of these blocks is used for each track. With the timbers in the position shown, a loaded car coming along track E will be prevented from descending the plane. After the rope has been fastened to the cars, the timber B is swung to one side, so as to allow A to take the position shown by the dotted lines. The empty cars coming up the plane on track F find the

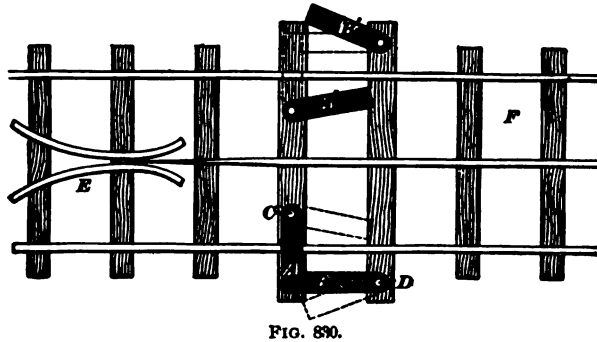

FIG. 830.

timbers in the position shown on that track, and pass along, after which the timber A' is swung over the track, and is locked by the timber B', as shown by the dotted lines. On the next trip the loaded cars coming along track F this time find the track closed. After the rope has been fastened to the cars, the timber B' is swung over, and the cars are let down the slope, the timber A' being moved by the wheels to its original position. The empty cars coming up the slope on track E find the timbers A and B in the position shown by the dotted lines, and pass along, after which the timbers A and B are again placed in their original position by the runner. This operation is then repeated, locking and unlocking the blocks on each track alternately.

2336. At the foot of the gravity-planes before described there should be a slightly inclined surface for the

reception of the cars after they have descended the plane, the cars being prevented from running along the surface by spragging the wheels. If they are to be run in a tipple, the first car may be uncoupled and the sprags removed, thereby letting the car run along the track by gravity to the tipple. Instead of doing this, the safety-block shown in Fig. 831 may be used, which is entirely similar to that

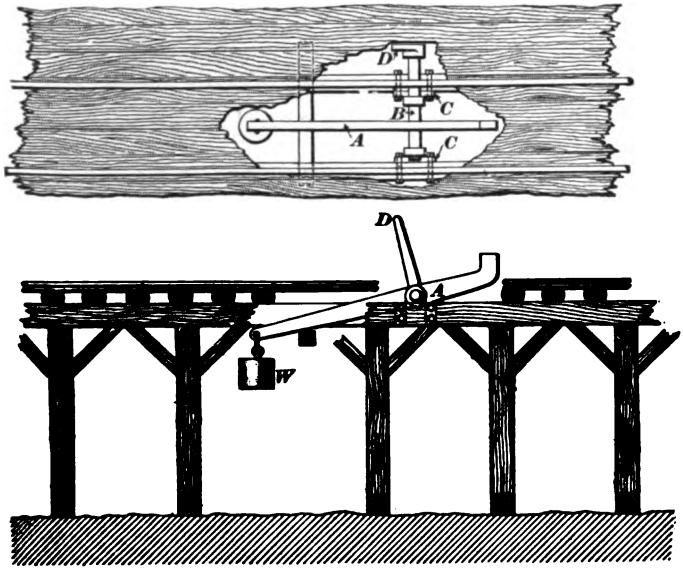

FIG. 831.

illustrated in Fig. 829, except that the short end of the lever *A* is not inclined as shown in Fig. 829. With this arrangement, after the cars have descended the plane and been spragged, they are uncoupled and the sprags are removed, thereby letting them run along the track by gravity until the front axle of the first car strikes the projecting part of the bar *A*. When a car is to be run on the tipple, the lever *D* is pulled to the right, thereby swinging the bar *A*, the projecting curved part clearing the axles, and the car passes. After the rear axle has passed over the projecting part of the bar *A*, the lever *D* is released, and the weight *W* falls down and raises the projecting curved part to its original position

before the axle of the next car strikes it. With this arrangement, the cars can be allowed to run to the tipple as required, it being very easy to handle, and simple in construction.

2337. As a safeguard against life and property, every inclined plane should be provided with some kind of an arrangement to prevent the cars from descending to the bottom of the slope in case the rope breaks. The arrange-

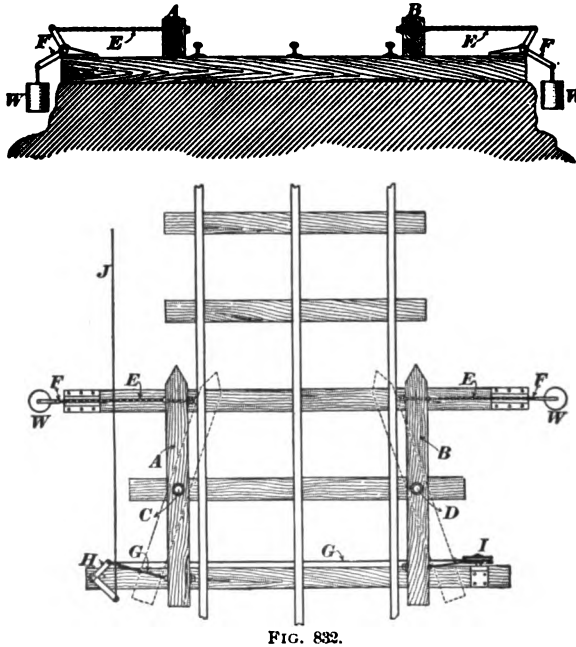

FIG. 832.

ments in general use for this purpose are very crude, either stopping the cars coming down the slope, or switching them off and throwing them from the track. In Fig. 832 is shown an arrangement called a **safety-lock** used for stopping the cars. This consists of two timbers *A* and *B* placed on the outside of the track, having their front ends pointed and iron-bound, and pivoted at *C* and *D*, respectively, in such a manner that the pointed ends may be swung over the rails. At the front end of each timber is fastened a chain *E*. This chain is also connected to one leg of the

bell-crank F, to the other leg of which a weight W is hung, which causes each timber to always take the position shown in the figure. To the other end of each timber are fastened the chains G. Each end of these chains is connected to one leg of the bell-crank H, the chain which is fastened to the timber B being led over the wheel I, which is securely fastened to the ties, and then led under the rails to the bell-crank H. To the other leg of the bell-crank H is connected a wire J, which is led to the head of the slope, where it may be pulled by the runner. The operation of this may be explained thus: Upon the rope breaking and the cars running down the slope, the runner at the head of the plane pulls the wire J, which causes the bell-crank H to swing the pointed ends of the timbers A and B over the rails into the position shown by the dotted lines. The wheels of the cars, upon reaching this point, strike the timbers, and a general smash-up follows. It can well be supposed that this lock must be repaired after each time it has been in use.

2338. An arrangement for switching the cars off the track is shown in Fig. 833, in which two tongues A and B are placed as shown and fastened to a chain C, one end of which is connected to one leg of the bell-crank D, having a weight W hung to the other leg, which causes the tongues to always take the position shown. The other end of the chain C is led around the pulley E, which is fastened to the cross-tie, and is attached to a wire F led to the head of the plane. This arrangement admits of the empty cars being run up the slope, since the wheels force over the tongues A and B to the position shown in dotted lines. When the loaded cars come down the slope, the tongues A and B

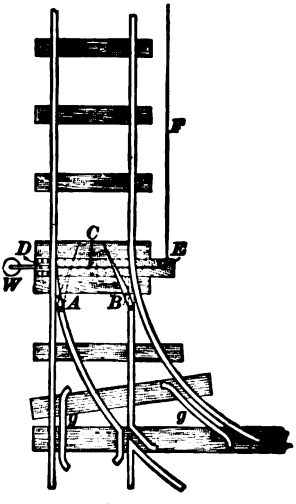

FIG. 833.

must be pulled over by the wire F to the position shown by the dotted lines, so that the cars may pass. In case the rope breaks at any point above the switch, the wire F is not pulled, since the tongues are always in position, or closed, so that the runaway cars will be switched off to one side. This arrangement possesses the property of always being set to switch the runaway cars off the track; but this is done at the expense of an extra amount of labor on the part of the runner, as he must pull the wire F, in order to open the switch when the descending cars reach it, for, otherwise, they would be switched to one side.

ENGINE-PLANES.

GENERAL DESCRIPTION.

2339. This is a system of haulage that is adopted on inclined roads where the pitch is just sufficient to run the trains down grade with the hauling-rope attached, or where

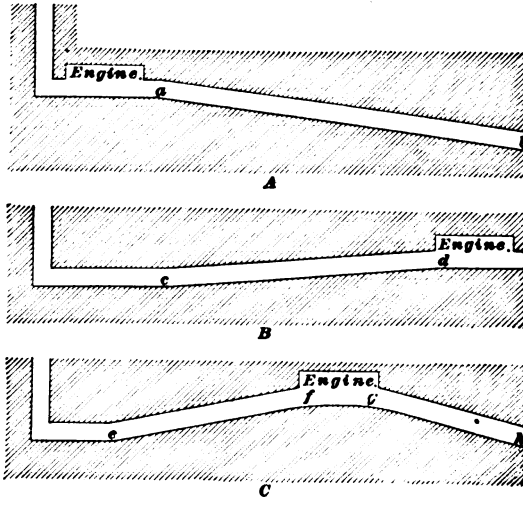

FIG. 834.

the direction of the pitch is such that the loaded cars must be hauled up grade. By reference to A, Fig. 834, the direc-

tion of the pitch is such that the trains must be hauled up grade, whereas in *B* the loaded cars must be lowered, because the direction of the pitch is down grade. Hence in *A* the hauling-engine is located at the shaft, whereas in *B* the engine is located either at head of the incline or at the shaft. In the latter case, the rope is conducted along one side of the track, and carried round a return sheave, as shown in Fig. 835. In *C*, Fig. 834, the hauling is done on two reverse inclines; consequently, the engine must be placed at the highest elevation of the inclined roads.

2340. Fig. 834 shows three distinct classes of engine-planes: (1) Those on which the loaded cars are hauled up grade by the engine, and the empty cars are run back by gravity, as in *A*, where the full trains are hauled up grade from *b* to *a*, and the empty cars are run back from *a* to *b*. (2) Those on which the loaded train runs down an easy grade, hauling the rope with it, and where the empty train must be hauled up grade with the engine. (3) Those on which the engine is located at the head of two reversely inclined roads, as in *C*. In the latter case, the engine hauls the loaded trains up grade from *h* to *g*, and then the loaded trains proceed down grade by gravity from *f* to *e*, and the empty trains are hauled up grade from *e* to *f* by the engine, and then run down grade from *g* to *h* by gravity.

2341. In mine haulage, engine-planes of the character shown in *C*, Fig. 834, are found to furnish the best possible results, for where the seam is undulating the reverse inclines are found to supply excellent conditions for long haulage to be done cheaply and expeditiously, because the engine can be located at the highest point between the two inclines. If the run from the shaft to the engine is a mile, and that from the engine to the foot of the incline *g h* is half a mile, one drum and one rope can be made to run the empty cars first from the shaft to the engine, and, second, to lower the cars from the engine to the foot of the down-grade incline *g h*. In short, a pair of reverse inclines can be made to obviate the necessity of the use of a tail-rope.

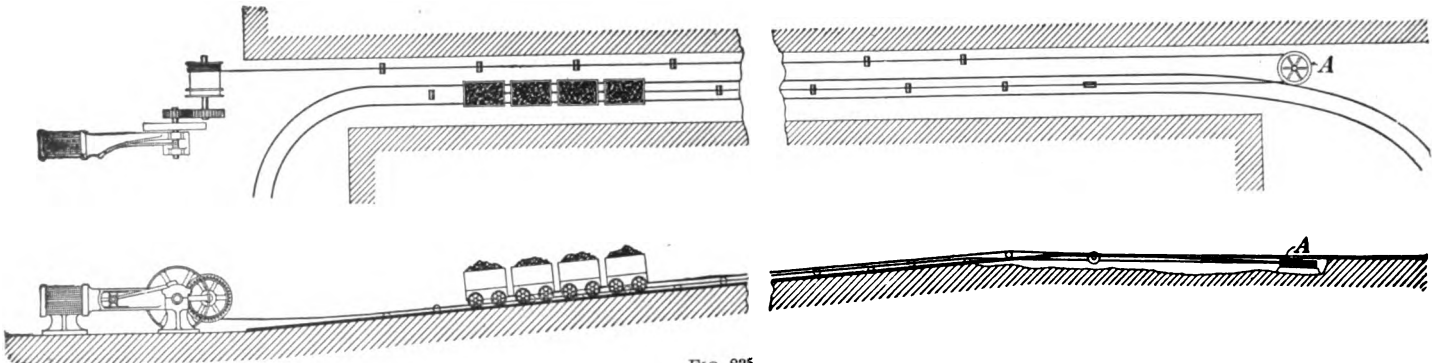

FIG. 835.

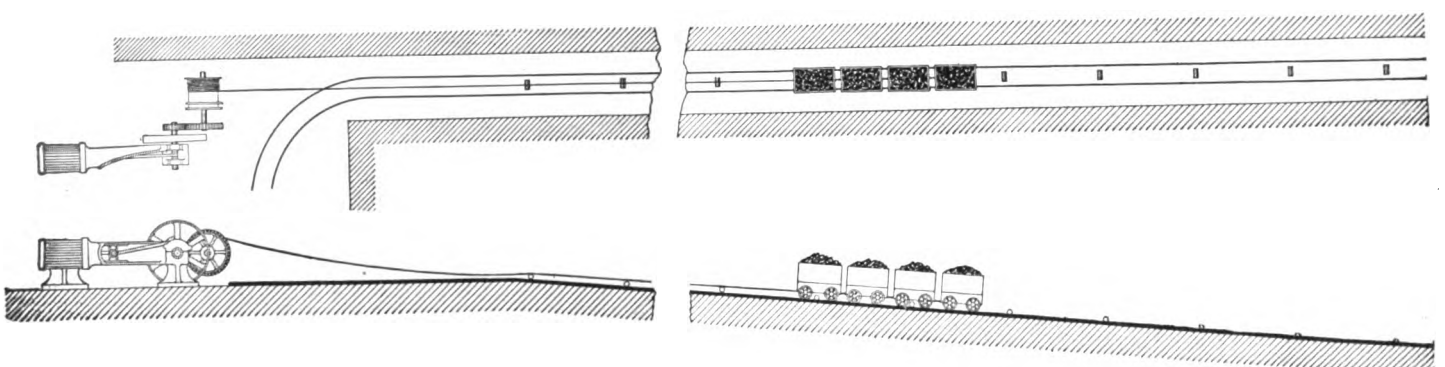

FIG. 836.

2342. There are two cases in which the engine-plane is superior to all other systems. They are: (1) where the seam is pitching heavily from the shaft, for then no type of locomotive can be used to do the haulage as cheaply and quickly; (2) when the road passes over two reverse inclines, where, however, the pitch from or to the shaft is small or just sufficient to run the train back with the rope; then locomotive haulage can sometimes be adopted with better results. Fig. 836 is a good illustration of an engine-plane haulage to the shaft, and shows in plan where the engine is located with reference to the lead or line of the rope.

2343. In some of the later installations of engine-plane haulage, the engine is not located in the mine, but on the surface, and the haulage-rope is conducted down the shaft, or down a bore-hole made for the purpose. Fig. 837 supplies a good illustration of how the hauling-engine may be located at the top of an incline for upward haulage; but this is a surface arrangement, and has attached to it an appliance that is seldom required in a mine. However, as it is used in connection with mine-surface appliances, and sometimes on slopes, it is here considered worthy of notice.

The device in question is the barney or truck M seen behind the full car that has just arrived at the top of the engine-plane. The barney is a little car that runs on rails set between the rails of the coal-car. The rope is attached to the barney, which is thus used to push the full car up the incline in front of it, so that when the full car reaches the top of the incline, it can run away by means of its inertia. Again, when the empty car reaches the foot of the incline at P, the barney dips down into the little pit at N, and becomes disengaged from the empty car, which, by the inertia acquired by the velocity due to its descent, runs into a parting to allow the next full car to run over the barney. When the engine starts, the barney rises out of the pit and bumps against the full car as before.

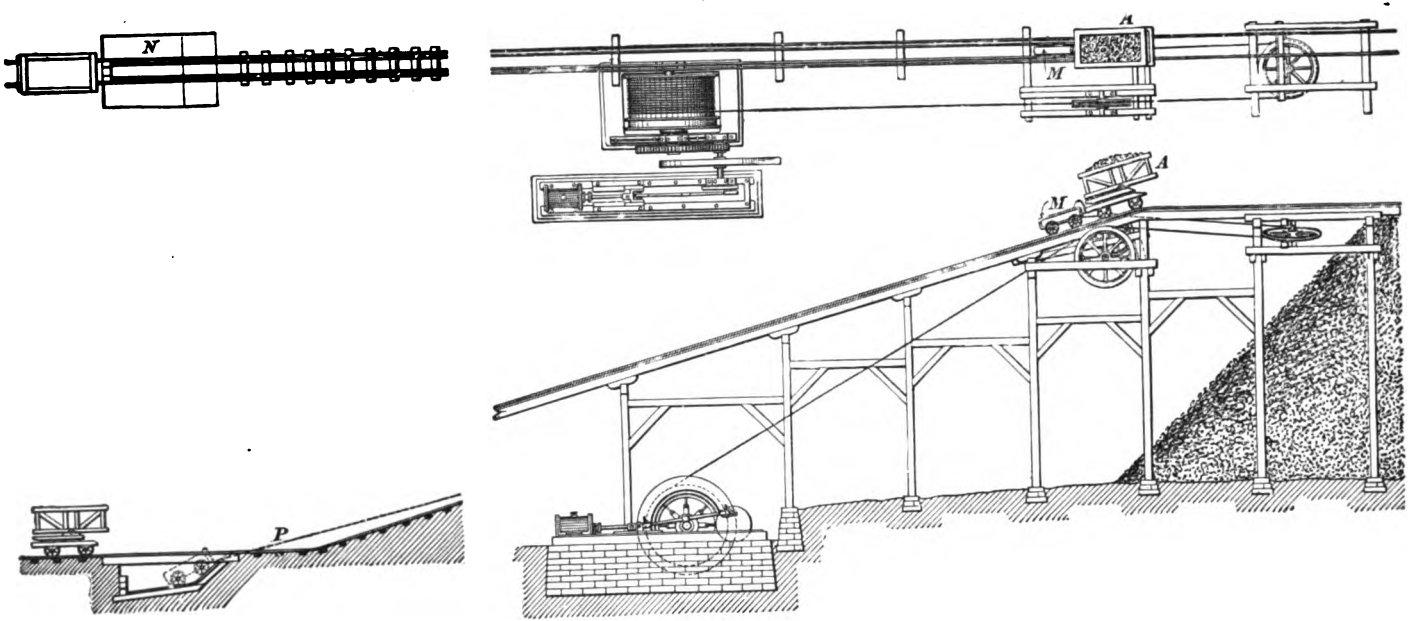

FIG. 837.

2344. Before considering the numerical calculations concerning engine-planes, some other matters of detail in the working of the tracks must be noticed. For example,

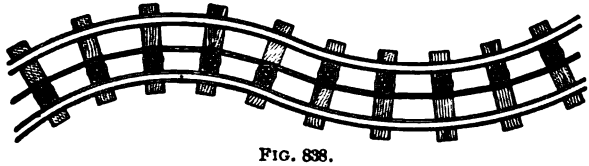

FIG. 838.

where curves occur the guide-sheaves for the rope are so set within the rails that the rope is made to run in the middle of the track, as in Fig. 838; or, if it is desirable to use larger

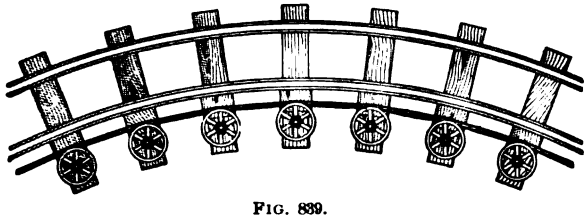

FIG. 839.

sheaves that will not damage or strain the rope by sharp bends, the sheaves are sometimes set on the side of the track that corresponds to the inside of the curve, as in Fig. 839.

2345. The drag-bar, or back-set, shown in Figs. 840 and 841, is a provision made for safety during the ascent of heavy trains on engine-planes.

In the event of a broken rope, this prevents the train

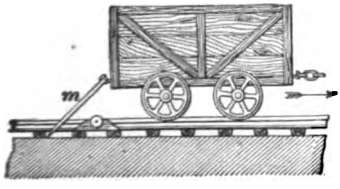

FIG. 840.

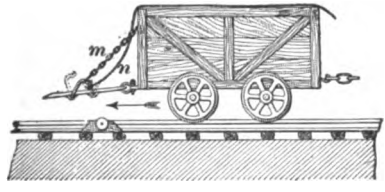

FIG. 841.

from running back, and by this means the damage that would otherwise occur is prevented.

A loose drag-bar is shown in Fig. 840. It is simply a strong iron bar hooked to the rear of the last car in the

train. Its mode of operation is as follows: As the train runs up the incline, the bar trails over the ground. Should the rope or one of the coupling-chains break, it sticks into the ground and prevents the train from running back. The drag-bar shown in Fig. 841 is the same in character as that shown in Fig. 840, except that it is prevented from trailing and knocking against the rollers on the ascent of the train, being suspended by the chain *M*, one end of which is attached loosely to a bent hook, which has the shape shown by the dotted lines. A second hook fits over the end of the first one, and the weight of the bar straightens the chain which supports it by means of the two hooks. In case of accident, the bar is dropped to the ground by the train-rider pulling the rope which is attached to the smaller hook on the right. This pulls the smaller hook over the projection on the end of the bent hook, thereby causing the latter to slip through the end link of the chain, and take the position shown by the dotted lines. This action releases the bar, which thereupon falls and digs into the ground.

2346. In a large mine there can not be a main haulage for which all the loaded cars are gathered at one station. Since this is the case, not only must the system of the main haulage be modified so as to run the work off from different stations, but sometimes a system that appears in all respects the best for the grades of the main haulage-roads must be abandoned for another that will allow the gathering-up stations to be located nearer to the working faces. Fig. 842 furnishes such a case. Here the head of the engine-plane is at the shaft, and the gathering-up stations are located at the entrance to the side entries. If the latter are driven along the strike of the seam, as they happen to be in this case, the main haulage is made to reach no farther than where the main rope is taking hold of the two full cars at *B*. It is clear, then, that the engine-plane haulage here adopted is an expensive one. To avoid expense, either the side entries should be driven on a pitch sufficient to allow the trains to run to gathering-up stations, nearer the working

faces, or another system of haulage, such as main and tail rope, or endless rope, should be adopted to reduce the cost of long and expensive local haulage. Cases no doubt occur in

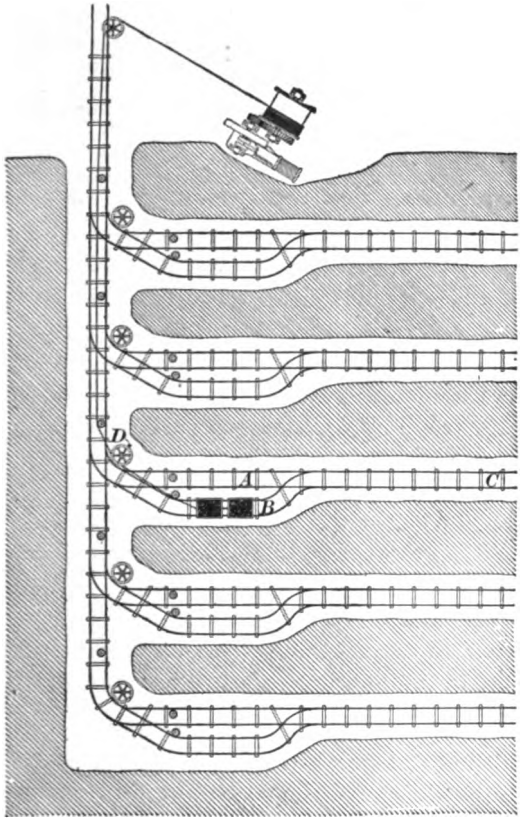

FIG. 842.

which the side entries are so short that the main and local haulage here shown would do, but they are exceptional.

2347. In engine-plane haulage, it is important that trains of reasonable length be run; otherwise a greater number of cars are required than it is prudent to use for the output. The number of cars in a train should not exceed thirty, and the grade should not be less than 3 per cent. to

attain an average speed of 10 miles an hour when running back. A train of empty cars in good working order, and running on a good track, will acquire a good speed on a pitch of 2.25 per cent., and a train of full cars under the same conditions will run at a good speed on a pitch of 2 per cent.; but for all-around good work, a pitch of 3 per cent. is the most reliable, and, therefore, should be the minimum.

CALCULATIONS FOR ENGINE-PLANE HAULAGE.

2348. To find the tension in the haulage-rope when the inclination of the road, the length and weight of the rope, the number and weight of the cars, and the coefficient of traction are given, proceed as follows: First, find the traction due to the friction of the weights of the cars, coal, and rope as follows: Divide the sum of the weights of the cars, coal, and rope by 40, the latter number being the coefficient of traction due to friction. Second, to find the traction required for the gravity due to the incline, multiply the sum of the weights of the car, coal, and rope by the per cent. of grade, and the product is the traction required for gravity. To find the total force required for traction, or the tension in the hauling-rope, add the traction due to friction to the traction due to gravity, and the sum is the tension in the hauling-rope. What has been here said can be shown by a formula.

Let W = the total weight of the train;
w = the weight of the rope;
$C = \frac{1}{40}$ = the coefficient of friction;
a = the grade, per cent.;
T = the tension in the rope in pounds.

Then, $$T = \left(\frac{W + w}{40}\right) + a\,(W + w). \qquad \textbf{(200.)}$$

EXAMPLE.— 20 loaded cars weigh 4,000 pounds each, and the hauling-rope is 5,000 feet long and weighs .88 pound per foot. What is the tension in the rope at the moment the engine hauls away from the bottom of the incline, the grade being 3 per cent.?

SOLUTION.—The tension due to friction is equal to

$$\frac{(20 \times 4{,}000) + (5{,}000 \times .88)}{40} = 2{,}110 \text{ lb.}$$

The tension due to gravity is equal to

$$.03\ [(20 \times 4{,}000) + (5{,}000 \times .88)] = 2{,}532 \text{ lb.};$$

and, therefore, the total tension in the rope is

$$2{,}110 + 2{,}532 = 4{,}642 \text{ lb.} \quad \text{Ans.}$$

The total tension can be found by substituting the values in formula **200**; thus,

$$T = \frac{(W + w)}{40} + a(W + w) =$$

$$\frac{(20 \times 4{,}000) + (5{,}000 \times .88)}{40} + .03\ [(20 \times 4{,}000) + (5{,}000 \times .88)] = 4{,}642 \text{ lb.}$$

EXAMPLE.—Suppose that the train in the previous example is made to run with a velocity of 12 miles an hour. What would be the horsepower required to do this work?

SOLUTION.—The velocity of the train is $\frac{12 \times 5{,}280}{60} = 1{,}056$ feet per minute. The tension in the rope was found to be 4,642 lb. Hence, if 1,056 be multiplied by 4,642, the product will be the number of foot-pounds of work per minute the engine must do, and if this product be divided by 33,000, the quotient will be the horsepower required.

Thus, $$\text{H. P.} = \frac{1{,}056 \times 4{,}642}{33{,}000} = 148.5 \text{ H. P.} \quad \text{Ans.}$$

2349. There is one peculiarity in the solutions that have just been arrived at, and that is the taking of the full weight of the rope. The student will observe that the engine must only overcome the total weight of the rope at the moment of starting the run, and at the finish of the run the weight of the rope has no effect; therefore, the mean weight of the rope against the engine is half the total weight. It would, therefore, appear that the total weight of the rope should not be taken; but it so happens that as the weight of the rope reduces, the leverage against the engine increases. The engine begins to haul with an empty drum, and as the rope rolls on, the radius of the drum increases, and, therefore, if the engine runs at a constant speed, the speed of the train quickens as the rope shortens. For this reason, the correct average of resistance is found by taking the total

weight of the rope throughout the run as an offset to the increasing radius of the drum.

EXAMPLE.— 25 loaded cars weigh 4,600 pounds each, the length of the engine-plane is 6,000 feet, the weight of the rope per foot is 1.2 pounds, the grade of the incline is 5 per cent., and the velocity of the train is 13 miles per hour. What is the tension in the rope and the required horsepower of the engine?

SOLUTION.— $W = 25 \times 4{,}600 = 115{,}000$ lb.;
$w = 1.2 \times 6{,}000 = 7{,}200$ lb.

Substituting these values in formula **200**, we have

$$T = \frac{(W+w)}{40} + a(W+w) =$$

$$\frac{115{,}000 + 7{,}200}{40} + .05(115{,}000 + 7{,}200) = 9{,}165 \text{ lb.} \quad \text{Ans.}$$

The velocity of the train is $\frac{5{,}280 \times 13}{60} = 1{,}144$ ft. per min.; therefore, the horsepower is $\frac{9{,}165 \times 1{,}144}{33{,}000} = 317.7$ H. P. Ans.

2350. The weight of the rope is such an important factor in the loss of useful effect on an engine-plane, that if the work is run off at a high velocity with a rope of light weight, it can be done with a less expenditure of energy. To prove this, suppose the same amount of work must be run off as in the previous example, but at a rate of double the speed and with a rope of one-fourth the weight; what horsepower is required to do the work with the lighter rope?

One-half of W in the preceding example is $\frac{115{,}000}{2} = 57{,}500$. One-fourth of w is $\frac{7{,}200}{4} = 1{,}800$ lb., and the velocity per minute is, for 26 miles an hour, equal to $\frac{26 \times 5{,}280}{60} = 2{,}288$ ft. Using formula **200**, we have

$$T = \frac{(W+w)}{40} + a(W+w) =$$

$$\frac{57{,}500 + 1{,}800}{40} + .05(57{,}500 + 1{,}800) = 4{,}447.5 \text{ lb.},$$

and $$\frac{2{,}288 \times 4{,}447.5}{33{,}000} = 308.4 \text{ H. P.} \quad \text{Ans.}$$

From this calculation, it is plain that the loss of useful effect due to the heavy rope is equal to 317.7 — 308.4 = 9.3 H. P.

2351. Engine-plane haulage, like all other systems, is capable of being modified for special conditions, and sometimes these modifications are of great importance. For example, the modifications may be such as to closely approximate to some of the modes of action of a main and tail rope haulage. In such a case, the haulage from four or more districts in a large mine is done with separate ropes, that are made attachable and detachable with coupling-sockets. The haulage will be done with what are practically tail-ropes, because they are used for hauling from the engine instead of to it, the shafts being situated in a shallow basin of such a character that the loaded trains will run by gravity to the shaft, but have not sufficient fall to haul the empty trains away into the different stations in the workings. Each district rope, therefore, takes the exact form of a tail-rope, for if the cars are hauled into four districts *A*, *B*, *C*, and *D*, at each of the stations there is fixed a return wheel for the district tail-rope. To haul into any one of the districts, the method of coupling is as follows: One end of the rope is coupled with a socket to the rope on the drum, and the other end is coupled onto the inner end of the empty train for hauling in. The engineer then receives the signal, "Haul into *A* station," and when the train arrives the rope is knocked off and attached to a full train, and then the signal is given to the engineer, "Drop away the full train from *A* station."

This is a cheap and efficient system, where the conditions are such as have been stated.

2352. The district rope system of engine-plane haulage is also adopted in cases where the seam and the workings advance up grade from one side of the shaft and down grade from the other, and the seam is pitching sufficiently for the empty train to fall one way and for the full train to fall the other. The power required to do the work of this variety

of engine-plane haulage is worthy of careful consideration. First, the rope is balanced, for, on hauling away from the hoisting-shaft, the rope lies along one side of the track, reaching to the return wheel, and the rope from the return wheel, lying in the middle of the track, reaches to the engine near the shaft. Therefore, no allowance need be made for resistance due to the weight of the rope, further than that twice the weight of one side of the rope is taken to find the resistance due to friction. Second, the only resistance due to gravity is that of the train of empty cars. The following example shows how the horsepower is found for a haulage of this character:

EXAMPLE.—What horsepower is required to haul 30 empty cars along an incline 4,000 feet long, having a grade of 3 per cent.? An empty car weighs 1,400 pounds, the weight of the rope per foot of length is .88 pound, and the maximum velocity of the train is 12 miles per hour.

SOLUTION.—The weight of the rope is $4{,}000 \times 2 \times .88 = 7{,}040$ lb., and the weight of 30 empty cars is equal to $1{,}400 \times 30 = 42{,}000$ lb. $\frac{(W + w)}{40} = \frac{(42{,}000 + 7{,}040)}{40} = 1{,}226$ lb., the resistance due to friction, and $a\,W = .03 \times 42{,}000 = 1{,}260$ lb., the resistance due to gravity. Then, $1{,}226 + 1{,}260 = 2{,}486$ lb., the tension in the rope. Again, 12 miles an hour is equal to $\frac{5{,}280 \times 12}{60} = 1{,}056$ feet per minute; therefore, the required horsepower is $\frac{1{,}056 \times 2{,}486}{33{,}000} = 79.552$ H. P. Ans.

2353. From the foregoing, the following equation gives the tension in the rope of an engine-plane having a return rope:

$$T = \frac{W + w}{40} + a\,W. \qquad \textbf{(201.)}$$

Also, if v = velocity in feet per minute, and H = the horsepower, the following equation gives the horsepower required to operate the plane:

$$H = \frac{T\,v}{33{,}000}. \qquad \textbf{(202.)}$$

The student should here carefully note that in this case the resistance due to gravity is .03 W instead of .03 $(W + w)$, as in the other cases; if he observes the reason for this difference, he will avoid future causes of perplexity.

TAIL-ROPE SYSTEM.

DESCRIPTION OF THE SYSTEM.

2354. There are four classes of roads on which this system of haulage may be adopted with success, namely:

Level roads.

Undulating roads.

Roads of small pitch.

Roads on which alternate levels and relatively high pitches occur.

2355. The mode of action that characterizes this system is that of a special provision for hauling in opposite directions. This is secured by means of two ropes, called, respectively, the main and tail ropes. Another feature of this system is its adaptability for hauling trains of cars to and from all the gathering-up stations of the different districts in a mine. In hauling to the hoisting-shaft, it is clear that the destination is the same for every loaded train, from whatever gathering-up station it may come; and as the hauling-engine is either located in the neighborhood of the shaft, or the hauling-ropes enter the mine through the shaft, it is clear that the rope that is always pulled in one direction towards the shaft will have some specific name, and this name is *main rope;* that is, it is the one rope that does the hauling out of every district to the shaft. Hence its name, *main*, or chief rope, or rope that is always used for hauling to one point. The same can not be said of any of the tail-ropes, for they are used for hauling to different stations. To realize what their use is, suppose that there are five gathering-up stations, A, B, C, D, and E; then, to haul to the A station, a special district tail-rope is required, for this rope must pull in the direction of the A station only, or the station to which the train must go. This being so, the tail-rope for A will not do for B, neither will the B rope do for the A station. The same is true of the other three stations. Therefore, if it is intended to haul out of five districts, five tail-ropes, or one for each station, are required.

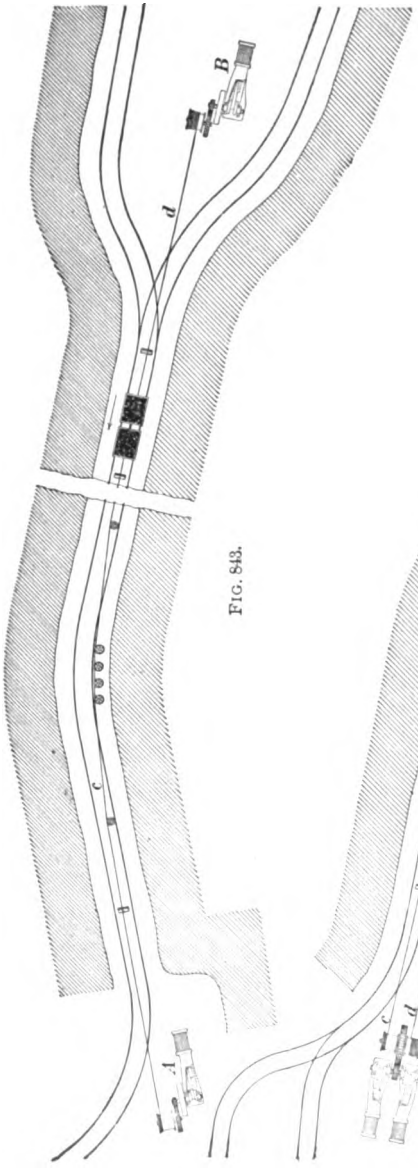

FIG. 843.

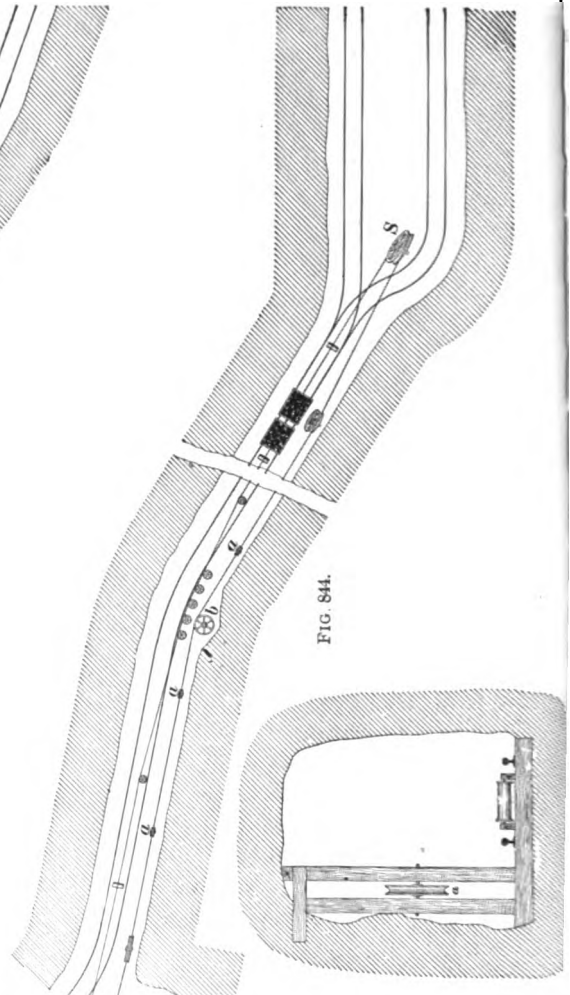

FIG. 844.

The tail-ropes, then, are peculiar to the districts for whose haulage they are used.

2356. A very good idea of the use of the tail-rope may be obtained from a study of Fig. 843. In this case, a train of cars is supposed to be running on a level road hauled by the engine *A* to the shaft. It is clear that without a reverse or tail rope, this engine could not be applied to haul an empty train back to *B*; therefore, in the absence of a tail-rope engine, the engine *B* must do the return hauling. It will readily be seen that the rope running onto the drum of the engine *A* takes the place of the main rope, and the rope running onto the drum of the engine *B* takes the place of the tail-rope; yet, it is not truly a tail-rope, for the one is as much a main rope as the other.

The chief lesson this figure teaches is the difference between this system of haulage and that of the engine-plane. In the latter, gravity did the work that is done in the former by the tail-rope. As on a level plane there is no force like the earth's gravity to return the train to the point whence it is hauled by the engine *A*, the engine *B* is made to do the tail-rope or return haulage.

2357. Fig. 844 shows how the return haulage is done with a tail-rope. It will be noticed that the two drums on the engine at the left-hand side of the figure are for winding the two haulage-ropes. For example, *c* is the drum for the main rope and *d* is the drum for the tail-rope. The main rope is coupled to the front of the train of cars, and is seen to be hauling them to the shaft. The tail-rope, on the other hand, is uncoiling from its drum and passing along the side of the track on rollers at *a*, *a*, *a*, and ultimately it is seen passing around the return sheave at *S* to the rear end of the train to which it is attached.

Fig. 845 is an illustration of how the return sheaves are erected at the gathering-up stations at the ends of the haulage districts.

2358. Having so far given a general description of this system of haulage, it next becomes important to notice the

use and relationship of certain mechanical details with which the student must be familiar before he can claim to have an intimate acquaintance with this system of haulage. For example, it is not enough that he should know that two hauling-drums are used, but he should thoroughly understand the special work for which each is intended. It is not difficult to conclude that one of them is for the coiling and uncoiling of the main rope, and the other to do the same for the tail-rope, for it so happens that while one coils on, the other uncoils. For example, when the main rope is coiling on, the engine is engaged in hauling coal to the shaft from one of the stations, and, therefore, as the main rope is coiling on, the tail-rope must be uncoiling. As the train is approaching the shaft, it is hauling in its rear the tail-rope; when the train has reached the bottom of the hoisting-shaft, the tail-rope is uncoupled from its rear and attached to the front of an ingoing empty train, and at the same time the main haulage-rope is uncoupled from the loaded train and coupled to the rear of what is now the ingoing empty train. To effect a change in the direction of haulage, the tail-rope drum is thrown into gear, the main-rope drum is thrown out of gear, and the engine hauls in the empty train with the tail-rope. The empty train now pulls in the main rope to do the work of hauling out the next loaded train, just as the loaded train pulled out the tail-rope. It has just been stated that the drum for the main rope is uncoupled from the engine, and the tail-rope drum is coupled to the engine to haul in the empty train. This statement suggests some mechanical arrangement for connecting and disconnecting the hauling-drums with the engines. This operation is technically known as clutching in and out of gear. For instance, to haul in, the tail-rope drum is clutched onto the engine, and the main-rope drum is thrown out of gear. To haul the cars out, the drum of the main rope is clutched onto the engine, and the tail-rope drum is thrown out of gear. It might be thought that clutching one drum and throwing the other out of gear is all that the engineer must do. Such, however, is a mistake,

for, when passing over certain inequalities in the road in hauling in or hauling out, the engineer must put the brake on the drum that is out of gear, to keep the rope reasonably tight, and prevent the possibility of it uncoiling and kinking, for it is destructive to a rope to allow it to uncoil itself.

2359. So far, then, as the drums are concerned, the matter is clear enough, but the coupling of the engines to the drums is a matter that requires more than passing attention. There are two modes of gearing up the engines for hauling. In some cases, the hauling is done with second-motion engines; that is, the drum and the engines are on different shafts. In such a case, the engines are said to be on the second motion, the engine and the drums being geared so that the engine makes two or more revolutions to one revolution of the drum. This permits smaller engines to be used than when the engines and the drums are on the same shaft, in which case the engines are on the first motion. If the same amount of work is to be done in each of the two cases, the engines on second motion must be run at a higher speed than the engines on first motion. The latter are made larger in size, and consume the same amount of steam in a given time that the small engines do while running at a higher speed. Now, it might be thought that the question of engines on the first and second motions is not of much importance; but such is a mistake, for in large and extensive mines it is important that the hauling-engines be put on the first motion, where the roads will permit, as they are required to run heavy trains with despatch, and make up, for the extra length of road, for the time occupied in socketing and unsocketing the tail-ropes and for unpreventable delays at the different stations.

2360. The next matter that must be considered is that of the tail-ropes for the different districts, so that the methods of socketing and unsocketing them with the general tail-rope of the engine may be understood. To make the explanation clear, Fig. 846 is introduced. Here the general haulage of the mine is divided into five gathering-up stations;

namely, *A*, *B*, *C*, *D*, and *E*. In the diagram a loaded train is seen to be leaving the gathering-up station *B* on its way to the hoisting-shaft. The drum for the main rope is shown at *R*, and the main rope is seen along the middle of the road. From the tail-rope drum marked *t*, the tail-rope is seen to advance along the lower side of the principal haulage-road, enter the entry *B* by the deflecting sheaves *e*, and then pass up along the right-hand side of the entry to the return wheel *w*, around which it passes, and returns to the rear of the train to which it is attached. On looking at district *A*, it is seen that both sides of the tail-rope from the return wheel reach to the entrance of the station, where the two

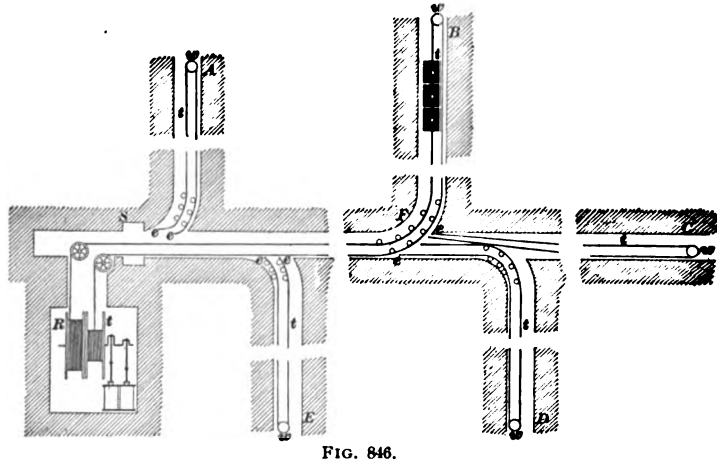

FIG. 846.

ends are seen lying ready for attachment. The same appears in districts *C* and *D*. On looking thoughtfully at these tail-ropes, a moment's reflection will enable the student to understand that if the train is hauled out from the shaft to *F*, it can be disconnected from the *B* tail-rope, and connected with the *C* one by the socket at the off-take station, and by this means hauled into station *C*. In this way, disconnections and connections can be made for running into any of the other stations. It is plain that to haul into any district, a change must be made in the tail-rope sockets at the entrance to it.

2361. There are two methods in practice for socketing and unsocketing the tail-ropes. In the first and oldest one, the connections are made when the train arrives at the entrance to the district into which it is intended to go. In the second method, all the district connections are broken continuously up to the entrance of the district for which the train is destined. For example, suppose the last train arrived out of district *A*. The coupler for station *A* uncouples his district tail-rope and couples up the general tail-rope to run past his station; the other couplers do the same, except the one who has signaled for the next train. He uncouples the general tail-rope, couples up the tail-rope of his district, and then signals for the engineer to "run in," and the train runs continuously from the shaft into the required station without a stop. This system of socketing is decidedly the best, because it prevents all unnecessary delay, and never produces a hitch when an efficient code of signals is adopted. Again, the system secures great economy in steam, for the engine is kept running almost continuously.

2362. Figs. 847, 848, and 849 show different methods of socketing. In cases like these, a main or general tail rope is used for all the entries. The connections, in the case of

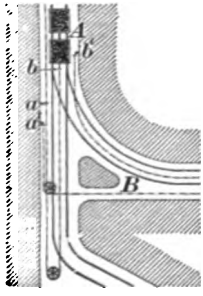

FIG. 847.

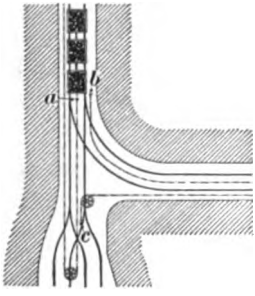

FIG. 848.

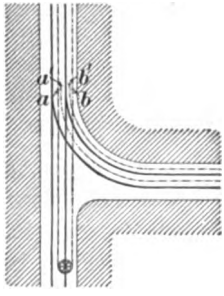

FIG. 849.

Fig. 847, are made when the empty cars come in to *A*. The rider unsockets the lead rope at *b*, and sockets on the entry-rope at *b'*. At the same time he breaks the connection at *a*, and couples on the rope *a'*. He then signals to the engineer to haul into the required gathering-up station.

The pulling out of the loaded cars is done by simply reversing the operation.

2363. In Fig. 848 another method of socketing is adopted; but this can only be put in practice in exceptional cases. The intention of this arrangement is to reduce the number of sockets. The coupling of the parting tail-rope to the main rope is made at *c*. The main rope is also uncoupled at *a*, and the rope *b* is coupled onto the train. Then the train can be hauled into the gathering-up station in the parting. Fig. 849 illustrates the branch connections for coupling-up, so as to run right through from the shaft into the station. The operation of uncoupling and coupling is done at one place. The ropes *a* and *b* are uncoupled from the train coming in the main road, and ropes *a'* and *b'* are coupled on. That portion of the main-roadway rope lying between the coupling-point and the sheaves lies idle in and alongside the road.

CALCULATIONS FOR TAIL-ROPE HAULAGE.

2364. The calculations for the tension in the rope and the horsepowers required for main and tail rope haulage require modifications that are not applied in other systems of haulage. For example, instead of gravity increasing the tension in all cases, it sometimes decreases it, and, therefore, becomes a negative quantity. To make all these differences clear, however, the conditions occurring will be explained in every case. The meaning and use of the letters in the expressions are as follows:

W = the total weight of the loaded train;
W_1 = the total weight of the empty train;
w = the weight of the rope;
$C = \frac{1}{40}$ = the coefficient of friction;
a = the grade per cent.;
T = the tension in the main rope in pounds;
T_1 = the tension in the tail-rope in pounds.

2365. The weights per linear foot of the main and tail ropes are sometimes different; sometimes the main rope is the heavier, and at other times the tail-rope is the heavier.

In all cases, however, the difference is small, and for that reason the weight will be taken as the same in the following examples, unless otherwise stated. Again, when an empty train leaves the hoisting-shaft, the weight of the moving tail-rope is equal to twice that due to the distance from the shaft to the gathering-up station, and when the train reaches the gathering-up station, the weight of the rope moving is still equal to twice the length of the journey, because then one length of the main rope lies in the middle of the track, and an equal length of the tail-rope lies on the side of the track. Therefore, the weight of rope in motion is never more or never less than that due to twice the length of the track from the shaft to the terminus to which the train must be hauled. For this reason, the weight of rope due to twice the length of the track will be taken in each case.

2366. The tensions in the main and tail ropes are calculated on the longest runs and on the maximum up grades of the roads. In cases where the haul to the shaft is down grade, and, conversely, the haul to the gathering-up station is up grade, the greatest tension falls on the tail-rope.

When the ropes weigh the same per linear foot, the tension in the main rope may be found by formula **201.** The tension in the tail-rope is found by the same formula, except that the weight of the empty train is to be used. That is, using the notation of Art. **2364,**

$$T_1 = \frac{W_1 + w}{40} + a\, W_1.$$

EXAMPLE.—The greatest length of main and tail rope haulage in a certain mine is 6,500 feet, and the tracks are perfectly level. The weight per foot of the main rope is .7 pound, the weight per foot of the tail-rope is .6 pound, the full cars weigh 5,000 pounds, the empty cars weigh 1,800 pounds, and the trains consist of 20 cars. What are the tensions in the main and tail ropes? If the average speed of the trains is 10 miles an hour, what is the horsepower of the hauling-engine, due to the maximum tension of the ropes?

SOLUTION.—The weight of the train of loaded cars is $20 \times 5{,}000 = 100{,}000$ lb. The combined weight of the two ropes is $(.7 + .6) \times 6{,}500 = 8{,}450$ lb. The tension in the main rope is

$$T = \frac{(W + w)}{40} = \frac{(100{,}000 + 8{,}450)}{40} = 2{,}711.25 \text{ lb.} \quad \text{Ans.}$$

The weight of the train of empty cars is equal to $1,800 \times 20 = 36,000$ lb. The joint weight of the ropes is $(.6 + .7) \times 6,500 = 8,450$ lb., as before.

Then, $$T = \frac{(W_1 + w)}{40} = \frac{36,000 + 8,450}{40} = 1,111.25 \text{ lb.},$$

the tension in the tail-rope. Ans.

According to the conditions of the example, the horsepower must be calculated from the maximum tension. The speed of the train is 10 miles an hour, or $\frac{5,280 \times 10}{60} = 880$ feet per minute. Then, applying formula **202**,

$$H = \frac{T v}{33,000} = \frac{2,711.25 \times 880}{33,000} = 72.3 \text{ H. P.} \quad \text{Ans.}$$

2367. It sometimes occurs that a portion of a haulage-road is up grade, and there the maximum strain on the rope takes place.

EXAMPLE.—On a short portion of a main and tail rope haulage the main rope must haul a train of 30 loaded cars up a grade of 4 per cent. What is the maximum tension in the main rope when a full car weighs 5,000 pounds, the main rope weighs 1.2 pounds per foot, the tail-rope weighs .88 pound per foot, and the length of the track is 5,600 feet?

SOLUTION.—The weight W of the train is $5,000 \times 30 = 150,000$ lb., and the weight w on the ropes is $(1.2 + .88)\, 5,600 = 11,648$ lb. Then, applying formula **201**,

$$T = \frac{(W + w)}{40} + a W = \frac{(150,000 + 11,648)}{40} + .04 \times 150,000 = 10,041.2 \text{ lb.},$$

the maximum tension in the rope under the given conditions. Ans.

2368. When a haulage-road only runs up grade for a short distance, it is the practice to accelerate the speed of the train a little before reaching the rising ground, and then by its inertia the train is carried over with no other loss than that of a reduced velocity, which it soon recovers. The horsepower is, however, increased for this short length of up-grade work in the following proportion:

Let l = the full length of the road;
l_1 = the short length of the up-grade road;
P = the horsepower required for level track;
P_1 = the increased horsepower.

Then, $$P_1 = \frac{P(l + l_1)}{l}. \qquad \textbf{(203.)}$$

The increased tension in the rope due to the local up-grade inclination of the road will very seldom equal the tension due to friction alone; therefore, the expression given in formula **203** is sufficient; but where the inclination is so great as to require a higher tension than that due to friction, then the increase of power is found by a special calculation.

EXAMPLE.—A main and tail rope haulage-road is for five-sixths of its length level, but in hauling out to the shaft, $\frac{1}{6}$ of the length of the road is up grade. If the road was all level, the haulage could be done with an 80-horsepower engine. What should be the power of the engine according to formula **203**?

SOLUTION.—Substituting in formula **203**, we have

$$P_1 = \frac{P(l + l_1)}{l} = \frac{80 \times (1 + \frac{1}{6})}{1} = 93\frac{1}{3} \text{ H. P.} \quad \text{Ans.}$$

In this connection, it must be understood that the up grade encountered is but slight, and that the speed of the train on the level is accelerated so as to carry the train along by inertia. In any case, the formula gives only approximate results.

2369. EXAMPLE.—In a main and tail rope haulage in a certain mine all the roads leading to the shaft have a mean fall of 3 per cent., the greatest length of run is equal to 4,862 feet, and the mean velocity is 12 miles an hour. The hauling-ropes weigh .88 pound per foot, the trains consist of 25 cars, each loaded car weighs 5,000 pounds, and an empty car weighs 1,900 pounds. What is the tension in the main and tail ropes, respectively, and what is the required horsepower of the hauling-engine?

SOLUTION.—To find the tension in the main rope, the gravity force due to the pitch of the incline must be treated negatively, because it reduces the tension in the rope; then, formula **201** becomes

$$T = \frac{W + w}{40} - a\,W.$$

Since $W = 5{,}000 \times 25 = 125{,}000$ lb., $w = 4{,}862 \times 2 \times .88 = 8{,}557.12$ lb., $a = \frac{3}{100} = .03$, we have

$$T = \frac{W + w}{40} - a\,W = \frac{(125{,}000 + 8{,}557.12)}{40} - (.03 \times 125{,}000) =$$

-411.072 lb., the negative tension in the main rope. Ans.

This means that not only is there no tension in the main rope, but an excess of gravity force equal to 411.072 lb., which will, without the engine, run the train at a high velocity.

The gravity force in the case of hauling the train of empty cars is positive, because they are made to ascend the incline; hence, we can apply formula **201** directly to find the tension in the tail-rope.

$W_1 = 1{,}900 \times 25 = 47{,}500$ lb.; $w = 4.862 \times 2 \times .88 = 8{,}557.12$ lb., and $a = \frac{3}{100} = .03$. Therefore,

$$T_1 = \frac{W_1 + w}{40} + a W_1 = \frac{(47{,}500 + 8{,}557.12)}{40} + .03 \times 47{,}500 = 2{,}826.428 \text{ lb},$$

the tension in the tail-rope. Ans.

No horsepower is exerted through the medium of the main rope, because the tension is negative; but by using formula **202**, the horsepower exerted through the tail-rope can be found. As the velocity is equal to $\frac{5{,}280 \times 12}{60} = 1{,}056$ feet per minute, we have

$$H = \frac{Tv}{33{,}000} = \frac{2{,}826.428 \times 1{,}056}{33{,}000} = 90.44 \text{ H. P.} \quad \text{Ans.}$$

2370. Let us observe the importance of calculating the tensions in the main and tail ropes. It is evident that if the main rope is a very light one, not only will the engine be better balanced, but great economy will accrue from the use of a less costly rope. In a case like this, however, it is better to reduce to a minimum the size of the main rope, and to increase the size and weight of the tail-rope to equalize the work of the engine. This conclusion will be clearly evident in the next example.

Where the haulage-roads have a fall towards the bottom of the shaft, it is evident that the full cars will furnish a gravity force that is negative to the general resistance, and that the difference between the weight of the ascending heavy tail-rope and the descending light main rope will furnish a gravity force that is positive to the general resistance.

Under these conditions, the tension in the main rope becomes

$$T = \frac{W + w}{40} - a\,(W - w_1), \qquad \textbf{(204.)}$$

where w_1 = the difference in the weights of the ropes, and the other letters represent the same values as given to them in Art. **2364.**

To find the tension in the tail-rope, the same formula is used, except that the second term must be added. That is,

$$T_1 = \frac{W_1 + w}{40} + a\,(W_1 - w_1). \qquad \textbf{(205.)}$$

EXAMPLE.—If in the example of Art. **2369,** the main rope and tail-rope weigh .6 pound and 3.65 pounds per foot, respectively, what will be the tension in each rope, and what will be the required horsepower of the haulage-engine?

SOLUTION.—Using formula **204,** we have

$$T = \frac{W + w}{40} - a\,(W - w_1) = \frac{5{,}000 \times 25 + 4{,}862\,(3.65 + .6)}{40} - .08$$

$$[125{,}000 - 4{,}862\,(3.65 - .6)] = 336.46 \text{ lb.} =$$

the tension in the main rope. Ans.

To find the tension in the tail-rope use formula **205.** In this case, $W_1 = 1{,}900 \times 25 = 47{,}500$; hence,

$$T_1 = \frac{47{,}500 + 20{,}663.5}{40} + .03\,(47{,}500 - 14{,}629.1) = 2{,}684.2 \text{ lb.} \quad \textbf{Ans.}$$

Using formula **202,** we have

$$H = \frac{Tv}{33{,}000} = \frac{336.46 \times 1{,}056}{33{,}000} = 10.8 \text{ H. P.},$$

the horsepower required for the haul out with the main rope. **Ans.**

Again, $$H = \frac{Tv}{33{,}000} = \frac{2{,}684.2 \times 1{,}056}{33{,}000} = 85.9 \text{ H. P.},$$

the required horsepower for the tail-rope haulage. Ans.

2371. From the example just worked out, some interesting lessons are learned. The first is, that the tension in the ropes under the greatest stress does not much exceed one long ton; further, the weight of a rope and the weight of a train may become negative to the resistance of friction. Again, the energy that is lost, when a portion of the gravity force due to the inclination of the road is wasted by using a brake, may be utilized by adjusting the weights of the ropes to retain it.

In the example of Art. **2369,** the horsepower was found to be 90.44, and in the example in Art. **2370** it is 85.9. Therefore, $90.44 - 85.9 = 4.54$ horsepower is saved by increasing the weight of the tail-rope. More than this could be saved by further reducing the weight of the main rope, and further increasing the weight of the tail-rope, where, as in this case, there is a down grade to the shaft.

2372. In main and tail rope haulage it is important that the maximum velocity of the trains should never exceed 12 miles an hour, for three very important reasons: (1) the tracks are costly to keep in repairs when the velocities exceed the limit just given; (2) high speeds are destructive to the cars, and, therefore, increase the haulage cost per ton; (3) derailing is more frequent at high speeds than low ones. As the maximum speed must be kept within a safe working limit, the number of cars in a train is determined by five important factors, all of which are variable, or different in different mines. Before estimating the number of cars that should be attached in a train, the values of the factors just referred to must be known. They are:

1. The output of the mine in tons of coal per day.
2. The mean lengths of the roads.
3. The weight of coal a car will carry.
4. The number of trains that can be run out of the different districts.
5. The number of tons of coal each haulage district can produce.

2373. The values of the factors are found as follows:

The prospective output of the mine is found by estimating, on the basis of present practice, how much more is possible.

The lengths of the roads are calculated prospectively from the attainable lengths measured on the map of the available field.

The cars are made to carry such weights as the dimensions of the hoisting-shafts and the heights of the haulage-roads will allow.

The number of trains is found as follows:

(*a*) Find the mean of all the lengths of the districts, each being measured from the shaft to the making-up stations.

(*b*) Multiply the mean length of the districts by 3, for the following reasons: A journey of full cars out and empty cars in is equal to double the length of a district road, and to compensate for unpreventable and unforeseen delays, another addition must be made to the length of the track,

and, therefore, the mean length of the district roads must be multiplied by 3.

(*c*) Find the number of feet a point in the rope will pass through in one working day. Suppose, for example, the mean speed of the rope is 12 miles an hour, and that the time of one day is 10 hours; then, $5{,}280 \times 12 \times 10 = 633{,}600$ feet, the distance a point in the rope will move through in 10 hours.

(*d*) Divide the distance a point in the rope would move through if kept continually in motion by 3 times the mean length of the district roads, and the quotient will be the number of trains that can be hauled out per day.

EXAMPLE.—How many trains can be run out by a main and tail rope haulage in one day of 10 hours, the speed of the rope being 12 miles an hour, and the lengths of five districts being as follows:

$$A = 5{,}012 \text{ feet};$$
$$B = 4{,}654 \text{ feet};$$
$$C = 3{,}278 \text{ feet};$$
$$D = 7{,}101 \text{ feet};$$
$$E = 2{,}794 \text{ feet}.$$

SOLUTION.— $5{,}012 + 4{,}654 + 3{,}278 + 7{,}101 + 2{,}794 = 22{,}839$.

$22{,}839 \div 5 = 4{,}567.8$, the mean length.

Then, $\dfrac{5{,}280 \times 12 \times 10}{4{,}567.8 \times 3} = 46.23$, or, practically, 47 trains per day. Ans.

To find the number of cars in a train, *divide the output in tons per day by the number of trains, multiplied by the tons of coal a car will carry; the quotient will be the number of cars in a train.*

EXAMPLE.—The output of a mine is 2,000 tons of coal per day; the number of trains to haul out this quantity is 47. If one car carries 2 tons, how many cars must there be in a train to do the work?

SOLUTION.— $\dfrac{2{,}000}{47 \times 2} = 21.276$, or, as there can not be a fraction, the number is 22 cars in a train; or, combining the examples,

$$\frac{2{,}000}{2} + \frac{5{,}280 \times 12 \times 10}{4{,}567.8 \times 3} = 21.63, \text{ or } 22, \text{ nearly, as before.} \quad \text{Ans.}$$

EXAMPLE.—The following particulars are required for the construction of a haulage plant on the principles of main and tail rope:

(*a*) The number of trains that can be run out per day.

(*b*) The number of cars in a train.

(*c*) The horsepower of the haulage-engine.

The calculations must be based on the following particulars:

1. Six district haulage-roads, A, B, C, D, E, and F the lengths of which are to be as follows:

$A = 6{,}784$ feet long;
$B = 4{,}250$ feet long;
$C = 8{,}276$ feet long;
$D = 3{,}560$ feet long;
$E = 5{,}720$ feet long;
$F = 7{,}963$ feet long.

2. The mean up grade to the shaft is 2 per cent.
3. The output is 3,000 long tons of coal in 10 hours.
4. The cars each carry $2\frac{1}{2}$ tons.
5. The speed of the train is 10 miles an hour.
6. An empty car weighs 1,900 pounds.
7. The weight of one foot of the rope is 1.56 pounds.

SOLUTION.—(*a*) The distance a point in the main haulage-rope will run in 10 hours is $5{,}280 \times 10 \times 10 = 528{,}000$ ft.

To find the number of trains that can be run out in a day, this last product is divided by three times the mean length of the haulage-roads. The mean length is

$$(6{,}784 + 4{,}250 + 8{,}276 + 3{,}560 + 5{,}720 + 7{,}963) \div 6 = 6{,}092\tfrac{1}{6} \text{ ft.}$$

Hence, the number of trains is

$$\frac{528{,}000}{6{,}092\frac{1}{6} \times 3} = 28.89, \text{ or, practically, 29 trains. Ans.}$$

(*b*) To find the number of cars in a train, the output is divided by the number of trains multiplied by the number of tons a car will carry.

Thus, $\dfrac{3{,}000}{29 \times 2.5} = 41.4$ cars, or, practically, 42 in a train. Ans.

(*c*) Remembering that the output is in long tons, the weight of a loaded car will be $(2{,}240 \times 2.5) + 1{,}900 = 7{,}500$ lb. Therefore,

$W = 7{,}500 \times 42 = 315{,}000$ lb., and $w = 1.56 \times 6{,}092.16 \times 2 = 19{,}007.54$ lb.

Substituting these values in formula **201**, we have

$$T = \frac{(W + w)}{40} + a\,W, \text{ or } \frac{(315{,}000 + 19{,}007.54)}{40} + .02 \times 315{,}000 =$$

14,650.19 lb.; the velocity of the trains is equal to $\dfrac{5{,}280 \times 10}{60} = 880$ feet per minute.

Substituting in formula **202**, we have

$$H = \frac{T\,v}{33{,}000} = \frac{14{,}650.19 \times 880}{33{,}000} = 390.7 \text{ H. P. Ans.}$$

FIG. 850.

TAIL-ROPE COUPLINGS.

2374. Fig. 850 shows a tail-rope coupling for connecting the different sections of the rope to run the train into a given district. There are many different coupling-links in use, and they all aim at securing three things:

First, to make a secure and reliable connection.

Second, to provide a coupling-link that will knock as little as possible on the rollers, and not injure the coils of the rope on the hauling-drum.

Third, to furnish a coupling in which the connection can be made and unmade in as short a period of time as possible.

The coupling shown in Fig. 850 is one of the simplest and oldest in use, and it is here given to explain the general principle involved, but not as a model of a good socket. Sockets and couplings must be seen in use to be understood in their mode of action, but the following figures furnish a general idea for a student in pursuit of a knowledge of the important details. This form of coupling is even yet extensively used; it consists of two goose-neck fastenings *M* and *M* made in the form of a pair of trough-shaped tongs, riveted by three or four rivets to the end of the ropes, and connected by the links *N*, *N*, and *O*, as shown. The wires at the end of the ropes should be either welded or soldered for an inch or so to prevent untwisting, or otherwise the rope will draw out.

2375. The hauling-ropes for engine and gravity planes and for the main and tail rope planes have securely fastened on their ends, caps or sockets for coupling them up with the

trains. Fig. 851 is an illustration of the simplest coupling of this character. It consists of what is called the goose-neck socket *M* and a clevis, or hook, *P*, connected with a cap, or socket, of the rope by means of the link *Q*. This clevis, or shackle, is attached to the coupling-bar of the car by means of the pin *R*. An arrangement of this character, however, is attended with serious difficulties in practice, for,

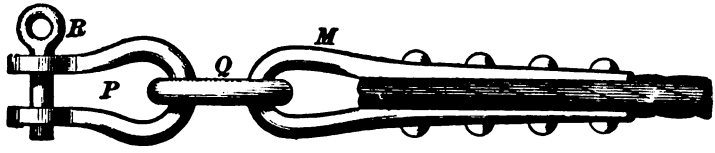

FIG. 851.

in the event of the cars being suddenly stopped, the rope coils under the point of attachment and kinks and becomes permanently injured. To remove the possibility of such an occurrence, a length of 15 or 20 feet of chain is connected with the clevis and the socket *M*, and a swivel *K* (see Fig. 852) is provided to let out any excessive twist that may exist in the rope. It will be seen that the socket attached to chain *b* in Fig. 852 differs in character from that attached to the chain *a*. The socket on the chain *b* is the one preferred in general practice, and, therefore, the mode of securing the

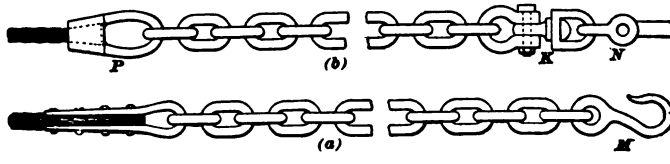

FIG. 852.

rope to this socket is illustrated by Fig. 853. The shell of this socket is something like a hollow conical tube, and for making the connection the mode of proceeding is as follows: The end of the rope is pushed through the shell of the socket, and then partly uncoiled, when one of three things is done. First, tapered wedges are driven in between the strands and the core, as shown in Fig. 853 (*a*); or the core is taken out, and a tapered plug is driven in the center of

the strands, as shown in Fig. 853 (*b*); or the strands are partly uncoiled, as shown in Fig. 853 (*c*), and drawn into the shell tightly, when molten lead or babbitt metal is

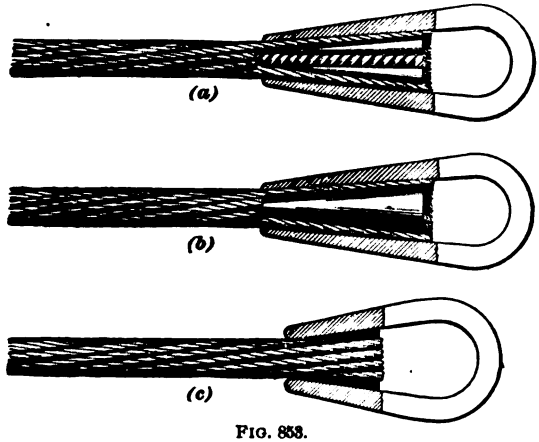

FIG. 853.

poured in, and this fills up the interstices and makes a plug so solid and firm that it can not be drawn through the shell. The result is that the connection is made as strong as the rope.

KNOCK-OFF LINKS OR DETACHING-HOOKS.

2376. It is sometimes necessary to detach the rope from the cars when they are in motion and when the rope is tight. To do this, special knock-off devices are applied. Fig. 854 is an illustration of a knock-off device, in which a

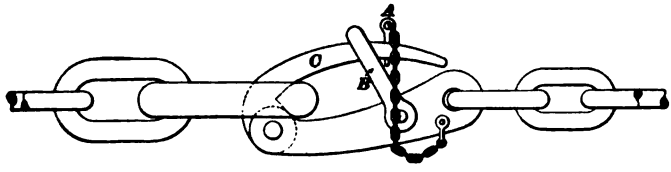

FIG. 854.

pin *A* is set in the bill of the hook; this keeps the link *B* in position. The moment, however, the pin *A* is withdrawn, *B* is forced back into the hinge of the hook at the right side of the figure, and now the bill *C* turns on the hinge underneath the connecting-link, and slips the rope.

In Fig. 855 is shown a knock-off link that can be operated by hand. When a detachment is necessary, the lever *A* is

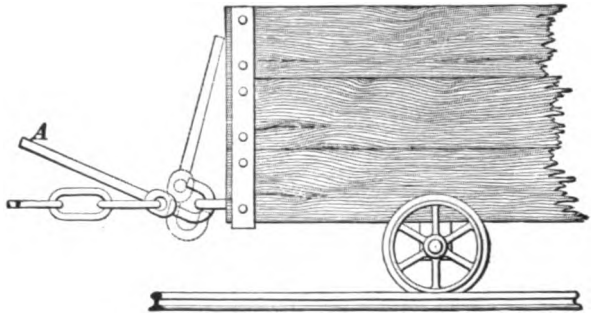

FIG. 855.

pulled upwards, and then the clevis, or hook, takes the position shown by the dotted lines, and the rope slips off.

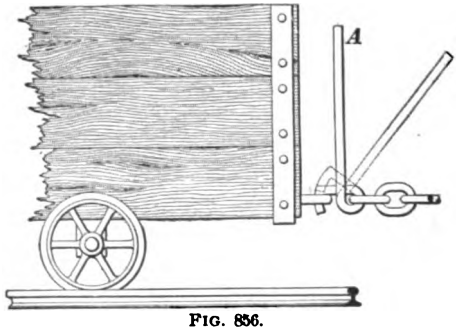

FIG. 856.

Fig. 856 is an illustration of a hand-detaching arrangement very similar in character to the previous one.

Fig. 857 is an illustration of an automatic detaching or disengaging hook. In this case, instead of the lever being operated by hand, one arm of a bell-crank lever is made to detach the rope by striking a beam *B*, as seen in the upper portion of the front end of the car. The knock-off girder *B* is set across the track, and so fixed that a train passing under it causes a bell-crank *A* to strike against *B*, when the lever *C* disconnects the clevis and sets the rope and its coupling free.

Fig. 858 is another illustration of an automatic detachment, but, unlike the others, it does not break the connection until the engine stops. The moment the car attempts to overrun the chain, the clevis detaches the rope, or rather the link *G*

slides off the hook at *H*, and the rope falls to the ground,

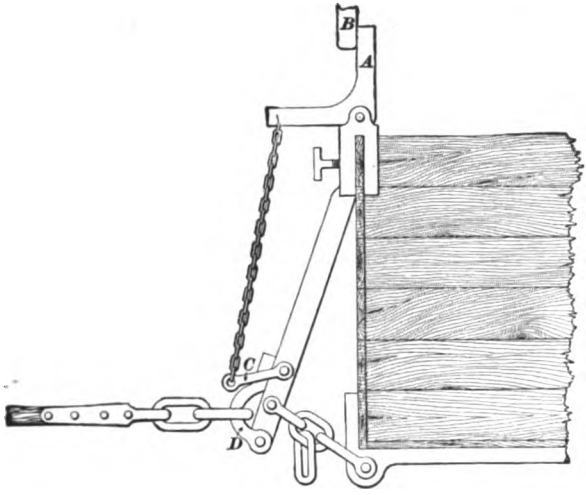

FIG. 857.

and leaves the train free to run farther on by its own momentum.

2377. The engines and drums for main and tail rope haulage are not always situated in the mines, for there the steam is either produced by boilers situated in the mines—which, to say the least, is a dangerous practice—or the steam is conducted in pipes from the surface. However well the pipes are protected, there is a great loss of energy due to the radiation of heat from the steam, and, therefore, it is better, if possible, to locate the hauling-engines at the surface, and conduct the hauling-ropes down the shaft or slopes into the mine. In some cases, the ropes are conducted through bore-holes; where this is done, great advantages are often secured, for sometimes by this method a large amount of local haulage can be effected that would otherwise have to be done by mules. At other times, it secures the advantage of a very much shorter rope. It might be thought that, by locating the engines at the surface and conducting the ropes through shafts or bore-holes, a difficulty would arise with

the signals between the gathering-up stations and the engineer, and between the gathering-up stations and the "make and break" boys at the entrances to the district roads Experience, however, has disapproved the conclusion, insomuch that the signals are found to be as perfectly given and as perfectly received as they would be if given from the gathering-up stations to the engineer in the mine. The necessity of accuracy in signaling can be readily appreciated when

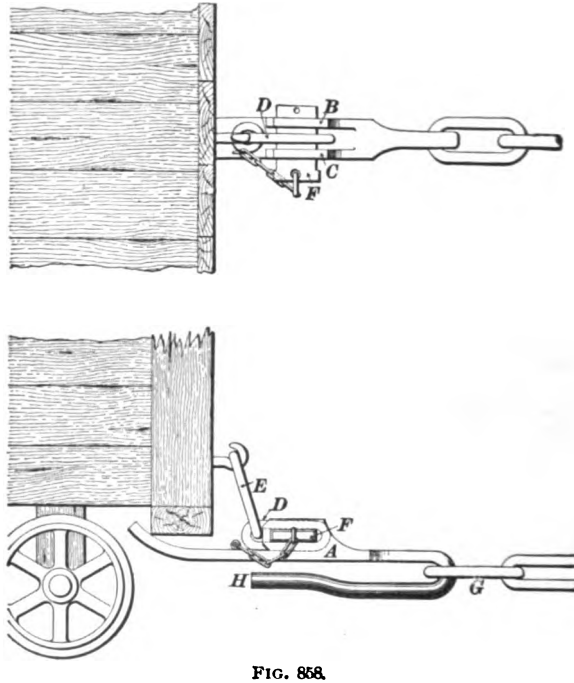

FIG. 858.

the student remembers that many of the roads are undulating, and require, on the part of the engineer, great care to prevent the trains overrunning the main rope on the one hand and the tail-rope on the other, when the trains are running down grade. With a proper code of signals, and with the engineer duly informed of the characteristic down grades of the several districts, the trains are kept well under control. In some cases, double tracks have been tried for main and

tail rope haulage; but, so far, such a mode of proceeding has been found to be neither prudent nor economical, as wide roads must be expensively secured, and in many cases middle-timbered. This is expensive enough, but it is only a fraction of a greater expense that is sure to arise in cases where a train running at a velocity of 10 or 12 miles an hour becomes derailed, and runs into the timber and draws it out. Then, if the roof is at all tender, it caves in, and, before the falling stone can be removed and the roof can be resecured, a great loss arises from the stoppage of the work, in addition to the great expense of retimbering. Single roads are better for main and tail rope haulage, and the single-road system is what gives to the main and tail rope haulage its preference over other systems.

ENDLESS-ROPE SYSTEM OF HAULAGE.

DESCRIPTION OF THE SYSTEM.

2378. The endless-rope system of haulage can often be substituted with advantage for either of the other three systems previously mentioned. The underlying principle of its action is that the haulage is done by a band or a series of bands of rope that operate the cars like an elevator-chain does the elevator-buckets. To realize this, let the loaded cars take the place of the full elevator-buckets, then the inverted and empty buckets are the exact analogue of the empty cars; for on one side of the endless rope there are full cars moving progressively to the shaft, and on the other the empty cars are moving inwards to the workings. In another sense, the principle of action of the elevator and the endless-rope haulage is alike; that is, the buckets on the endless chain of the elevator are set separately and at equal distances along the sides of the chain-belt, and in much the same way the cars attached to the endless rope are set separately at fixed distances along the rope, the full cars being attached to one side of the band of rope and the empty ones to the other.

2379. A good illustration of the arrangement of the rope-band, in reference to three of its most important features, is shown in Fig. 859.

1. The engine and the grooved wheels for clutching the rope for hauling are seen in plan in the upper portion of the figure, and in elevation in the lower portion. It will be noticed that the engine is located at one side of the tracks.

2. The two parts of the endless rope are seen between each of the two tracks, for the purpose of hauling in opposite directions, as shown by the arrows, which indicate that the loaded cars are moving outwards along the lower track to the shaft, while the empty cars are moving inwards to the workings, as indicated by the arrow on the upper track.

3. A tail-wheel *C* is provided to form the inner loop or end of the rope-band; hence, the two sides of the endless rope run along their respective tracks and around the tail-wheel *C* and the grooved wheels of the engine at *A* and *B*.

Two other important provisions designed to keep the rope tight are as follows: First, the tension-weight *D*. This is employed to keep the rope-band tight on the grooved grip-wheels; for if this is not done the rope will slip and the engine will be incapable of doing its work. Second, the tail or return wheel *C* is made, by means of a tension-balance, to keep the inner loop of the rope tight; for should one of the sides of the rope-band be allowed to run slack, then the grips attached to the cars lose their hold of the rope, and the haulage on that side of the band ceases. It will be seen that several deflecting sheaves are required for the engine end that are not necessary for the tail-sheave end. The reason for the difference is evident; for example, the sheave *C* can be made to slide in a frame inwards or outwards as the tension of the band requires adjustment, but the engine and the grip-wheels can not be made to slide in this manner; consequently, the tension-balance truck *D* has a wheel mounted on its top, and this forms a loop on one of the sides of the rope-band. Should the band slacken, the truck *D* descends the incline by its weight and tightens the rope, and should the rope become for a moment over-tight, then the tension-bal-

ance truck *D* rises and releases the stress. The deflecting sheaves *F*, *G*, *H*, *I*, etc., are necessary for the fixed engine, but are not required for the tail-wheel *C*.

2380. Fig. 860 is a plan of a typical endless-rope haulage with a single band. At the right-hand end of the figure the tracks *S* and *s* begin at the hoisting-shaft. The engine is located at *E*, and the sides of the rope from the grip-wheels are seen to pass round the deflecting wheels *w*, *w*. The tail, or return, wheel is shown at *T*. The direction of the motion of the loaded cars *l*, *l*, *l*, etc., is towards the hoisting-shaft, as indicated by the arrows, and the direction of the empty cars *e*, *e*, *e*, etc., is inwards to the working face, as shown by the arrows. In this figure, the similarity of the endless-rope haulage to that of the elevator endless chain and buckets is plainly seen, and yet there are three particulars in the mode of action in which the endless-rope haulage differs from the elevator chain and buckets.

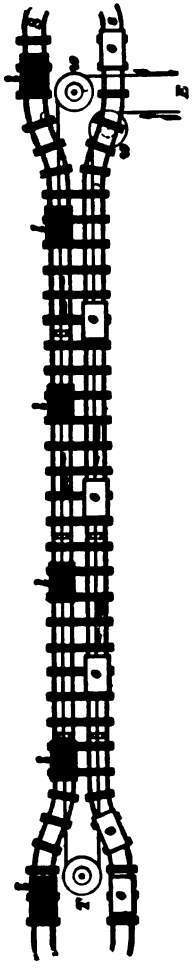

FIG. 860.

1. The buckets of the elevator are permanently fastened to the chain-belt; whereas, in the case of the endless rope, the cars are only temporarily attached.

2. In the case of the endless rope, the cars are detached at the hoisting-shaft end of the loop and passed on to the cage, and the empty cars from the surface are attached to the ingoing side of the rope-band.

3. At the tail-wheel end of the rope-band the empty cars are detached and sent into the workings to be refilled, while loaded cars from the workings are continually being attached to the outgoing side of the rope

to be carried forwards to the hoisting-shaft. The elevator chain and buckets are self-filling and self-emptying, while the cars of the endless-rope haulage are continually in process of being attached and detached. That is to say, at the tail-wheel or inner end the empty cars are continually being detached and the full cars are being attached, while at the outer or shaft end of the endless-rope band the full cars are always being detached and the empty cars are being attached.

2381. Fig. 860 shows an endless rope with a single band. Sometimes surface haulages of this character extend for miles over undulating ground. In the mines, however, it seldom occurs that a single band is sufficient for the entire haulage of a seam, and, therefore, several deflecting bands are necessary. When this is the case, the tail-wheel for the main or principal band is made to act as a grip or fleet wheel, and to rotate by suitable gearing another fleet-wheel, which hauls from the workings the cars coming to the main band. Therefore, the geared fleet-wheel for the local haulage is made so that it can be clutched in and out of action to prevent needless running when the supply of loaded cars from any district is not sufficient to keep this secondary band continually moving. Sometimes the main band is continued forwards in its advance into the workings, and deflecting grip-wheels are fixed at the entrances to all the districts it passes. When this arrangement is used, four or five deflecting bands bring their contents to one main band. The statement of this fact suggests that the cars on the main band must run at a higher velocity than those on the branching bands, and, in addition, that the cars on the district bands must be set at greater distances apart, because the main band must run off the cars from all the districts.

Since qualifications of this character are necessary, it is clear that the relative velocities of the secondary bands of rope must be properly adjusted, or the haulage, instead of being a success, will be a failure. Sufficient has been said to furnish a general description of the points which give to the endless-rope haulage its individuality.

2382. The conditions under which endless-rope haulage can be applied in mines to secure special advantages must next be considered.

1. A gravity-plane worked with an endless rope gives better all-round results than a plane worked with two ropes and two trains, because with the endless rope there is practically no limit to the length of the haulage which can be done by gravity. As was stated previously, when two ropes are used, the weight of the rope attached to the empty train at the commencement of the run soon becomes sufficient to counterbalance the weight of the coal.

2. Ordinary gravity-planes can only be made efficiently self-acting on a down grade for the loaded cars, whereas an undulating plane with endless rope that alternately pitches in opposite directions can be made self-acting by gravity, if it has a general fall sufficient to counteract the friction due to traction.

3. The united advantages of an endless-rope gravity-plane are such that it works efficiently wherever the two-rope system answers, and it works and gives satisfactory results where the two-rope system fails; that is, on very long planes and on planes pitching in opposite directions, yet having a sufficient general fall.

4. The general haulage of a mine can be done by gravity through the medium of an endless rope, where the ordinary gravity-plane could not be applied.

5. More work can be accomplished at a mine by the endless-rope system than by an engine-plane, because the "run back" on an engine-plane is done by gravity, and unless the pitch is sufficient to produce a high speed, only a relatively small amount of work is done, and where the pitch is considerable, a large amount of work is wasted in lifting a long, heavy rope.

6. In some cases, where an engine-plane is down grade to the shaft, and so long that the two-rope gravity-plane will not act, and engine-power must be employed to assist gravity, the endless rope will act and give satisfactory results without the aid of steam-power.

7. All the haulage that is done by the main and tail rope system can, where the roof and floor will permit, be done better and more cheaply by the endless-rope system, because the work can be run out of all the different districts the same as with the main and tail rope, yet with a smaller expenditure of motive power.

8. Haulage by the endless-rope system is cheaper on undulating roads than the main and tail rope, because the only work expended in the haulage is that of traction and the gravity of the mean pitch.

9. With the endless-rope haulage, there is no congestion at the gathering-up stations, and no delays due to several districts calling for cars at the same time; for the endless rope secures a continual output of full cars and a continual income of empty ones to keep the work progressing.

2383. So far, attention has been given to the typical endless-rope system. There are in practice several modifications of it, specially intended to adapt it to conditions in which the double track can not be used, as where the roof and floor are tender, and can not be kept secure without risk and great expense. These modifications aim at using a single track instead of a double one. In this case, the diffusion of the cars along the tracks must be dispensed with, and, in lieu of this, several cars are made to run in trains. For this arrangement to answer with an endless rope, two special provisions must be made. First, partings, or pass-bys, must be provided at frequent intervals along the track; second, automatic grips must be used, so that when a train enters a pass-by, the grip that secures it to the rope is automatically unloosened, and the train stands until a train moving in an opposite direction reaches the point in the track that is exactly opposite to that of the train in the parting. Then the grip of the standing train must automatically reclose, and allow it to move on to the succeeding pass-by. The pass-by and the automatic grip are only different substitutes for securing the advantages of the typical endless rope with double tracks. These modifications, how-

ever, do not remove, but only reduce the danger and expense of making and maintaining double tracks, for double tracks are made at the partings. They are expensive to maintain and keep in good order, and experience has shown that the endless-rope haulage with trains and numerous partings is not only not an improvement on the main and tail rope system, but is not, for an all-round haulage, equal to it.

2384. There are two distinct methods of arranging the ropes for endless-rope haulage. In one of them that has

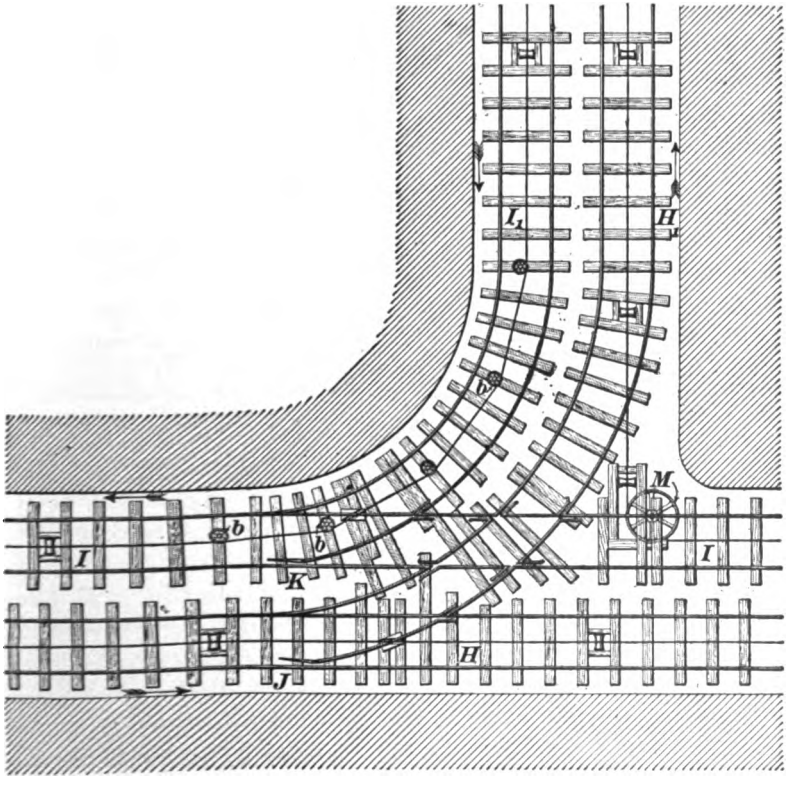

FIG. 861.

been frequently tried, and has never given complete satisfaction, the rope is made continuous, both for the main

roads and the branching roads. To show the meaning of this, Fig. 861 is introduced. Looking at an arrow at the bottom of the figure near the letter *J*, it will be seen that the rope advances to its utmost limit into the mine, and then returns. When it reaches the entrance to a district, a wheel is fixed under the rails at *M* for deflecting the rope into the district. It now advances to the return wheel for that district, and then comes back, as shown by the arrow on the left-hand side of the figure. It then returns by the main haulage-road, as shown by the arrow a little above the letter *I*. For running cars into a district shown in the figure, the empty cars are turned in by the switch at *J*, which is in charge of a switch-keeper. The empty cars run on until they pass over the roller near H_1, where the grips are fixed to the rope. Then they proceed on their journey into the district workings. In the same way, when cars are returning by the main haulage-road, the connection of the grips with the rope is unmade at *I* near the deflecting wheel *M*, and the cars run with their acquired momentum until they nearly reach the roller *I* at the left side of the figure; here the connection is remade, and the loaded cars advance on their journey to the hoisting-shaft.

2385. The chief disadvantage of this system is, that the rope undulates so much with the varying tension that the cars travel unsteadily, and, in consequence, the rope is soon damaged. The unsteadiness arises from two causes: 1. On a long lead of rope resting on rollers sixty feet apart, the vibrations or undulations become deep and rapid. 2. The amount of elasticity increases with the length of the rope. These two causes give to the cars the jerky movement that has just been referred to. The worst of all is, that the longer this continuous band of rope is made, the heavier the rope must be for the increased traction, and the jerks due to such a heavy rope become stronger and more pronounced in their character than those produced by a light rope. The system of using a continuous band for a main and district haulage is not a good one; this becomes more evident

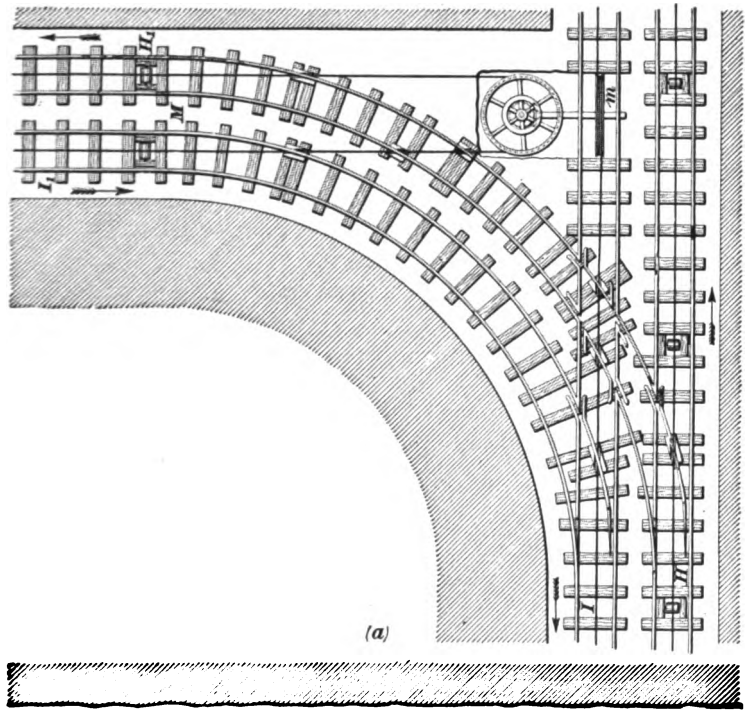

FIG. 862.

when compared with the system in which the haulage is done with a series of bands. When a district rope breaks, it only causes a local stoppage, whereas, when a continuous band breaks, the whole of the mine haulage is interrupted and stopped until the connection is remade.

2386. The endless-rope system that is worked with a series of bands is in practice preferable to all others. Its mode of action is shown in Fig. 862.

For the convenience of explanation, this mode of hauling is called the multiple-band system. Fig. 862 illustrates the character of the mechanism by which the secondary or district bands are actuated. In the figure it will be seen that at the junction of the district bands with the main ones, repeating fleet-wheels are used; for example, at *m*, Fig. 862 (*a*), the main haulage-band makes two complete turns round that fleet-wheel, and then continues its onward course. The wheel *d*, Fig. 862 (*b*), around which the main rope passes, drives the horizontal fleet-wheel *m* through the bevel-gears *g*, *h*.

The horizontal fleet-wheel is seen in the plan at the left-hand side of *m* in the plan of the roads. By this repeating fleet-wheel connection, a separate district band is made to haul the loaded cars out of *M* along the track I_1, and to haul in the empty cars along the track H_1. The levers *q* and *o* are applied to clutch the horizontal fleet-wheel in and out of gear. When no work is coming out of district *M*, the horizontal fleet-wheel is thrown out of gear, and when this district haulage is required it is put in gear. The advantage of this arrangement is that the stress on the rope of the main haulage-band is greatly reduced, for it seldom happens that all the district bands are moving at one time.

2387. Where endless-rope haulage is done by one engine, the stress on the main band of rope is very great, because this rope must sustain the stress due to the whole of the traction of the mine. Therefore, the rope of the main bands must be very large and heavy, or otherwise, after it has been in use a short time, it is liable to break and produce stoppages and delays of a very serious character. If light

ropes are used on the main band, waste can be avoided by taking them off after they have been used a short time, and using them to do lighter work as district bands. It is true that this can be done with heavy ropes, but the waste of energy due to the use of heavy ropes may be at once perceived when the student remembers that the weight of these ropes increases the traction due to friction, and thereby largely augments the cost of generating the motive power. It is, however, evident that if only one engine is employed for a general endless-rope haulage in a large mine with a large output, all the difficulties here pointed out are unavoidable. They may, however, be prevented entirely, and the system of haulage may be immensely simplified by using electric or compressed-air motors, or gasoline-engines, for working the district bands. By this means, two great advantages are secured. First, when a district band is not running, there can be no waste of costly energy, and when the rope is running the haulage can be done quickly or slowly, according to the exigencies of each special case, thus saving a needless waste of power. Besides, the ropes can be of the lightest character, consistent with economy and efficiency, and thus the tractive force can be reduced. Perhaps the following remarks will clearly illustrate the case in question :

Suppose there are 10 bands of rope all connected with repeating fleet-wheels; then the main bands are subjected to the stress due to 10 sectional haulages. Suppose, again, that all the bands are worked by separate motors; then each rope will only require a strength sufficient to do its own special work, which will be one-tenth of the whole. Consequently, ropes of one-tenth the strength will do the haulage as efficiently as the large rope previously noticed. It is sometimes urged that transmitted energy is attended with loss. This is true, but it is far better to lose 25 or 30 per cent. of the motive steam-power to obtain the advantage of transmitted energy by which separate motors are used for each band of ropes, because the tractive force is reduced by the reduction in the weights of the ropes, and the saving of energy is increased by reducing the velocities of the district bands to a

speed within the compass of the work to be done. By using gasoline-engines for the district haulages, however, there is no loss due to transmitted energy, because the energy required is generated in the cylinder of the engine.

2388. Extensive systems of endless-rope haulage are sometimes used on the surface. When, as sometimes is the case, the track is not less than two miles in length, and a great weight of coal must be carried over the road, it is necessary that the cars should be set at relatively short distances apart. The result is that a heavy tractive force falls on the rope. It can scarcely be urged that, in a case like this, a continuous lead should be broken for reducing the weight of the rope. In a mine, however, this reasoning does not apply, because there a single band can not be used, as separate bands are required for each of the districts into which the mine is divided, and as the division is imperative, all the advantages of a multiple haulage can be secured by using separate motors for each band. To do these separate haulages, however, electricity or compressed air must be used to transmit energy, or gasoline-engines must be used. Which of these three plans may be preferred depends upon the conditions met with in different mines. For example, the transmission of electric energy would sometimes take precedence. This being the case, it might be suggested that it would be wise to dispense with the ropes altogether, and introduce in their stead electric or compressed-air locomotives. They could not, however, be used in a large mine with a large output, because the trains running in and out of the different districts would interrupt one another's free passage, and cause great delays in the contracted roads of a mine, or in mines where the haulage is very long, and principally on one or two roads. The same may be said of compressed-air locomotives. Locomotives have their place in small mines, but for a large output, in a large mine with a number of districts, no system of haulage has yet been introduced that furnishes equal facilities with that of the endless rope. It does its work cheaply and efficiently within the limits of the ordinary working

hours. Locomotive haulage in large coal-mines worked in numerous districts is altogether out of the question, but electric or compressed-air motors or gasoline-engines for the main and district haulage give to the endless-rope system merits that are unobtainable by any other means.

2389. Before considering the mathematical questions that arise in reference to endless-rope haulage, there are certain details in the appliances of the system that are worthy of attention, and should be somewhat comprehensively understood by the mining student. These will now be described.

TAIL OR RETURN SHEAVES.

2390. As previously stated, tail or return sheaves are fixed at the inner ends of the tail-rope haulage-roads for reversing the direction of the rope and leading it back to the hauling-drum. Similar sheaves for the same purpose are used for the various bands of an endless-rope haulage system, but in this case the sheaves are mounted on cars, and are known as tension or balance cars. Their mode of action will, however, be taken up under a separate head.

2391. Fig. 863 shows a horizontal tail-sheave which may be used for the engine-plane or tail-rope systems. The cast-iron spider *m* is firmly bolted to the timbers shown, and is provided with a steel or wrought-iron pin *n*, around which the sheave *o* revolves. That part of the pin which passes through the spider has a smaller diameter than that which passes through the sheave, so that, by screwing up the nut, it is firmly held in the spider without clamping the hub of the sheave, and, therefore, offers no resistance to the free turning of the sheave. To prevent the sheave from coming off, and to keep dirt from entering the bearing, the pin is provided with a nut and washer *p*. For properly lubricating the sheave, the pin is provided with an oil-cup *q*, the oil from which flows through the hole of the pin, as shown by the dotted lines.

The sheave should be rigidly anchored, so that there is no

possibility of it becoming loose under a heavy load. The best method of doing this is to bolt the spider to a masonry

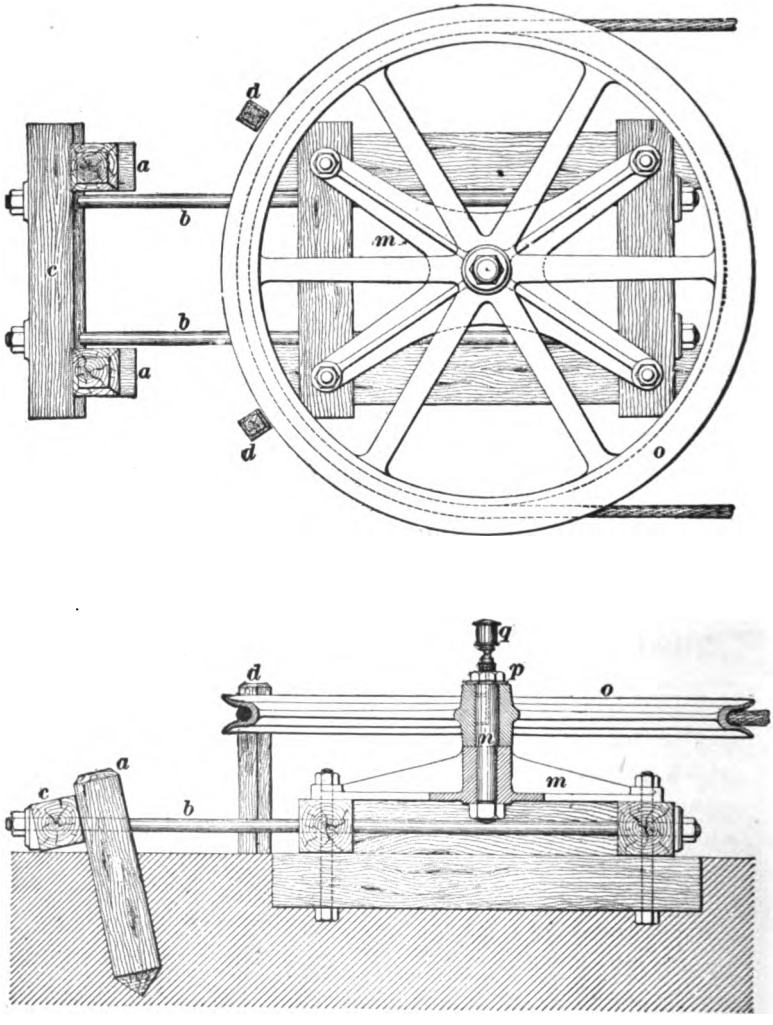

FIG. 863.

foundation built especially for it. This, however, is not always possible, owing to varying conditions; and even if it

were, it would be too expensive, unless the system were to be a permanent one.

In the figure is shown a common method of anchoring a sheave. Here the foundation is built of 12″ × 12″ timbers, to which the spider is bolted, the bolts passing through both timbers as shown. At a distance of about three or four feet from the sheave is firmly secured in the ground, at an angle, two timbers *a* and *a*, to which the sheave is tied by the rods *b* and *b*. One end of each of these rods passes through the upper foundation timbers, and the other through a 12″ × 12″ timber *c* placed on the outside of the two timbers *a* and *a*. The ends of the rods are supplied with nuts and cast-iron washers. For preventing the rope from falling off the sheave when it becomes slack or when the stress is removed, two timbers *d* and *d* are firmly fastened in the ground close to the sheave.

2392. Tail-sheaves are sometimes arranged as shown in Fig. 864. Here, the sheave *O* is in a vertical position

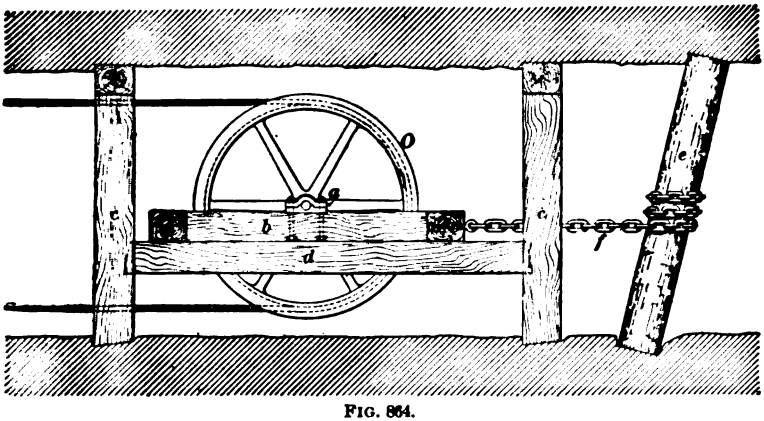

FIG. 864.

and revolves in bearings *a* placed on each side. It is firmly bolted to a strong rectangular frame *b* made of heavy timbers. The sheave is elevated a certain height by a wooden structure consisting of timbers *c* and *c*, rigidly fastened between the bottom and roof of the entry, and the horizontal timber *d*, as shown. This sheave is anchored by

rigidly fastening a post *e* at an angle, and wrapping one end of a chain *f* several times around it, the other end of which is fastened by means of an eye-bolt to the frame-timber *b*.

2393. In Fig. 865 is shown another method of anchoring a vertical tail-sheave. Here, two heavy timbers *a*, which

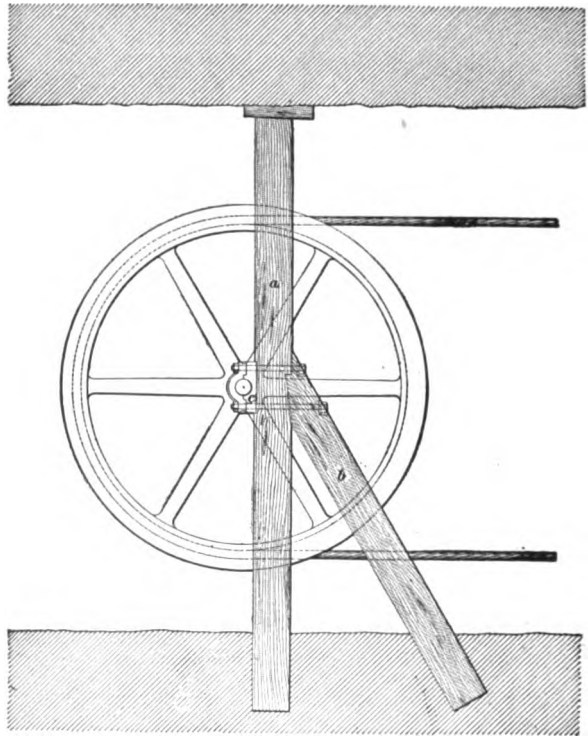

FIG. 865.

are strengthened by braces *b*, are rigidly fastened in a vertical position on each side of the sheave. The joint formed by the timbers and braces should be so made that there will be no liability of the brace slipping when under a great stress. This may be done as shown in the figure. The bolts which hold in place the bearings *c*, in which the sheave revolves, pass through the vertical timbers and the braces *b*.

By making the joint as shown, the bolts are wholly relieved from vertical stress due to the brace *b*.

2394. When it becomes necessary to place the tail-sheave directly under the track, the arrangement shown in Fig. 866 is generally used. A pit *L* of sufficient depth is provided, in which the tail-sheave *O* is placed. At a distance

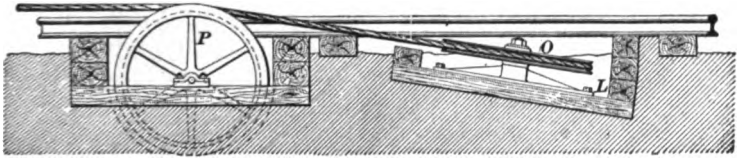

FIG. 866.

of about 30 or 35 feet from the tail-sheave is located a deflecting or guide sheave *P*. The rope, in coming along the center of the track, is deflected by this sheave, and then runs around the tail-sheave as shown.

2395. Tail and deflecting sheaves, around which a rope of 19 wires to the strand is to be run, should have a diameter of not less than 60 times the diameter of the rope; if the rope has 7 wires to the strand, its diameter should be not less than 100 times the diameter of the rope.

2396. When locating guiding or deflecting sheaves around which a rope is to be led, it is best to locate them in such a manner that the angle formed by the two parts of the rope which pass around the sheave is as large as possible, since the greater the angle the smaller the stress on the bearings in which the sheave revolves. That this statement may be clearly understood, reference should be made to Fig. 867, which represents an engine-plane. Here the engine is located at *A* and the cars are at *B*. In order to pull the cars in the direction indicated by the arrow (and for other reasons), it was necessary to locate three sheaves, as shown in the figure.

Assume that the resistance offered by the cars is 5 tons; then, neglecting the friction of the sheaves and the rope,

the tension in all parts of the rope will be 5 tons. To determine the load on the pin of the sheave C, around which it

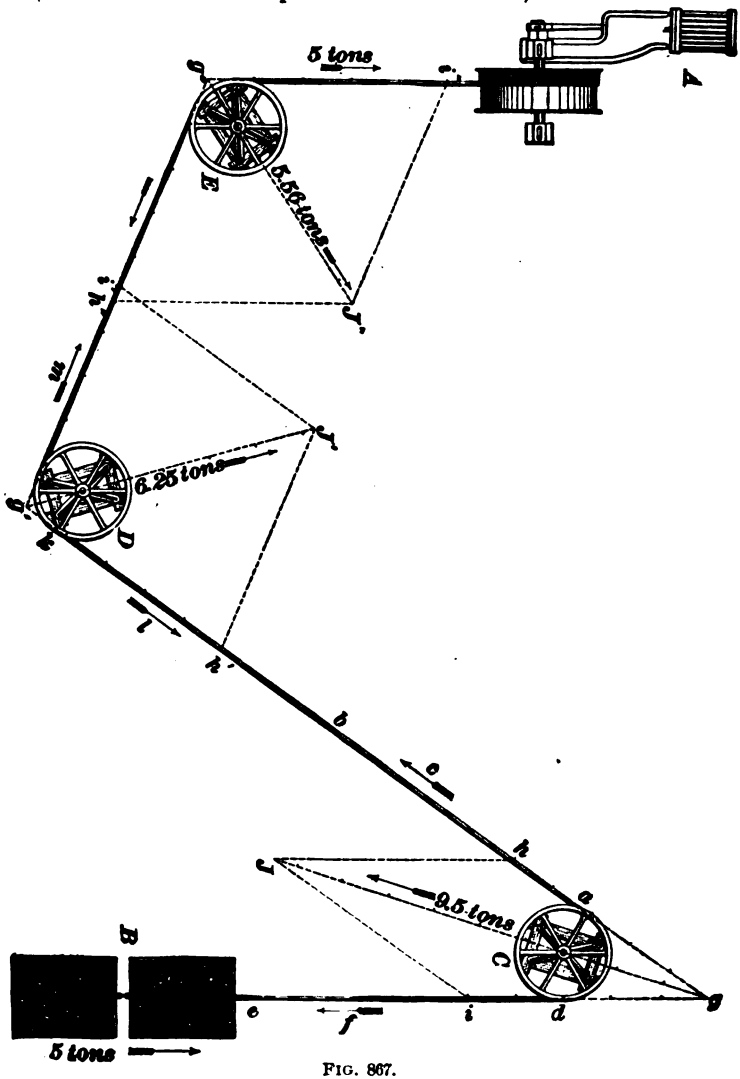

FIG. 867.

revolves, proceed as follows: To move the cars B, a force of 5 tons must be applied to the part $a\ b$ of the rope in the

direction of the arrow *c*. There is also a force of 5 tons acting in the portion of the rope in the direction of the arrow *f* due to the resistance of the cars. The sheave *C*, owing to these two forces in the rope, tends to move towards *J* on the line *g J*, but, as a matter of course, is prevented from doing so by the pin around which it revolves, and by the anchoring. The force which tends to move the sheave *C* towards *J* along the line *g J* may be found by producing the center lines of the portions *a b* and *d e* of the ropes until they intersect at *g*. To any convenient scale, lay off from the point of intersection *g* the points *h* and *i* on the portions of the rope *a b* and *d e*, respectively, each equal to 5 tons. Through the point *h* draw the line *h J* parallel to the portion of the rope *d e*, and through the point *i* draw the line *i J* parallel to the portion of the rope *a b*; then, draw the diagonal *g J* of the parallelogram. This diagonal is the resultant, and represents the greatest force acting on the sheave *C*. Measuring it to the same scale that has been used to lay off the forces *g h* and *g i*, respectively, its value is found to be 9½ tons. This 9½ tons represents the pressure on the journal and on the bearing of the sheave, and is nearly twice the stress in the rope. The pressure acting on the sheaves *D* and *E* is found in a similar manner.

In ascertaining the pressure on the sheave *D*, the direction of the stress in the portion of the rope *k b* must be considered as acting from *k* towards *b a*, as shown by the arrow *l*; that is, it must be regarded as being produced by the resistance of the cars. The direction of the stress in the portion of the rope *g' g''* due to the pull of the engine is from *g'* towards *g''*, or in the direction of the arrow *m*. Constructing the parallelogram of forces as above, and remembering that the tension in the rope still remains five tons, the resultant is *g' J'*, and measuring it to the same scale as has been used to lay off the forces *g' i'* and *g' h'*, respectively, it is found to scale 6¼ tons, a result considerably less than in the case of the sheave *C*. It will also be noticed that the angle *i' g' h'*, formed by the rope led around the sheave *D*, is considerably greater than the angle *h g i* formed by the rope

at the sheave C. In a similar manner is found the resultant stress $g''J''$ on the sheave E; measuring it to the scale used to lay off the force $g''h''$ and $g''i''$, respectively, it is found to equal about 5.56 tons. In a similar manner the resultant stress on any sheave may be found. It matters not whether the sheave be placed in a vertical, horizontal, or angular position.

The above results indicate the best method of placing the spiders to resist the stress on the sheave; namely, as shown in the figure, with the long side of the timbers which support the spider parallel to the resultant gJ, $g'J'$, or $g''J''$.

From the above, it is quite evident that a sheave may be used very satisfactorily in one place and not at all in another. Thus, referring to Fig. 867, a sheave placed at E would be subjected to a load of only 5.56 tons, while, if it were placed at C, it would be subjected to $9\frac{1}{2}$ tons, or would have about double the load on it. The sheave placed at E could be considerably lighter than the one placed at C.

TENSION, OR BALANCE, CARS.

2397. A new wire rope permanently elongates or stretches, on account of the twist of the strands, from about 1 to $1\frac{1}{2}$ per cent. of its total length. Thus, a rope 1 mile, or 5,280 feet, long of an endless-rope haulage plant will continually become longer until it obtains a length of about $5{,}280 + 5{,}280 \times .015 = 5{,}359.2$ ft., or it increases in length about 79.2 ft. There will be a continual variation in the length of the rope due to the temperature of the atmosphere, which will cause the rope to expand or contract. A steel-wire rope will expand or contract .00000599 of its length, and an iron-wire rope .00000686 of its length, for each degree of change in temperature; hence, if the above rope were of steel, it would be $5{,}359.2 \times (100 - 32) \times .00000599 = 2.183$ ft. longer in summer when the thermometer stands at 100° than in winter at 32°; and an iron-wire rope would be $5{,}359.2 \times (100 - 32) \times .00000686 = 2.5$ ft. longer. Were no provisions made for this increase and decrease in the length of the rope, the rope would be slack at one time

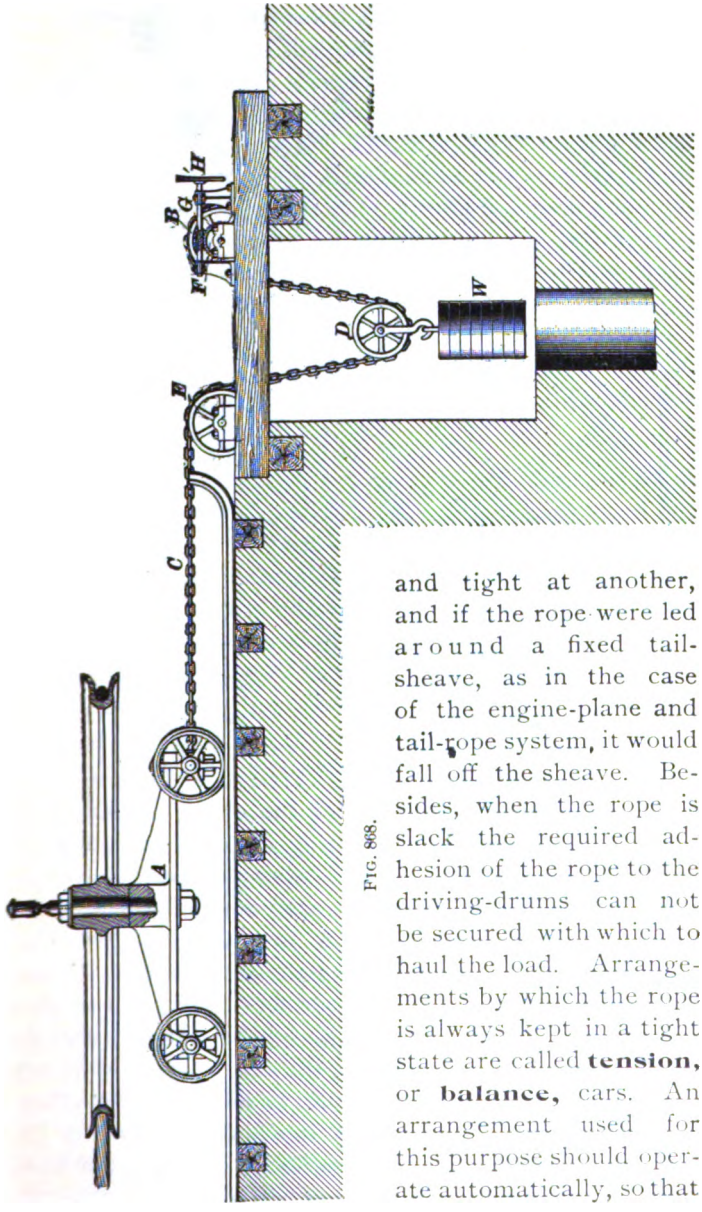

FIG. 868.

and tight at another, and if the rope were led around a fixed tail-sheave, as in the case of the engine-plane and tail-rope system, it would fall off the sheave. Besides, when the rope is slack the required adhesion of the rope to the driving-drums can not be secured with which to haul the load. Arrangements by which the rope is always kept in a tight state are called **tension,** or **balance,** cars. An arrangement used for this purpose should operate automatically, so that

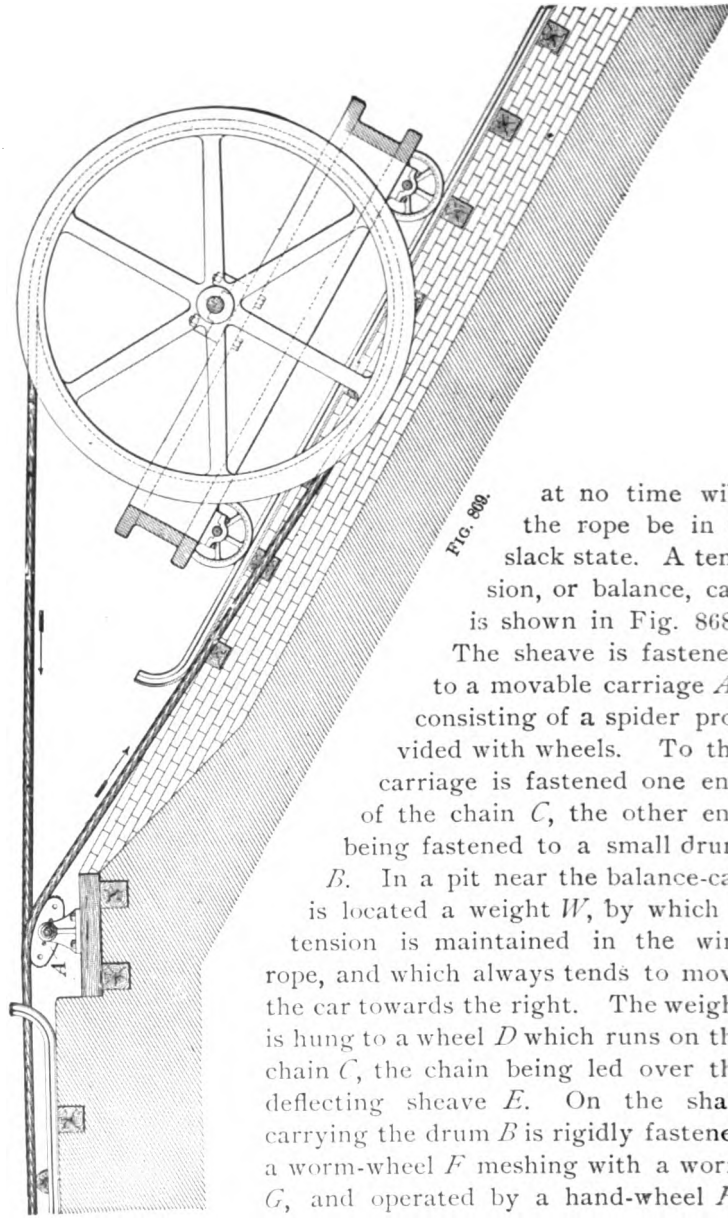

FIG. 868.

at no time will the rope be in a slack state. A tension, or balance, car is shown in Fig. 868. The sheave is fastened to a movable carriage *A*, consisting of a spider provided with wheels. To the carriage is fastened one end of the chain *C*, the other end being fastened to a small drum *B*. In a pit near the balance-car is located a weight *W*, by which a tension is maintained in the wire rope, and which always tends to move the car towards the right. The weight is hung to a wheel *D* which runs on the chain *C*, the chain being led over the deflecting sheave *E*. On the shaft carrying the drum *B* is rigidly fastened a worm-wheel *F* meshing with a worm *G*, and operated by a hand-wheel *H*.

After the wire rope has expanded enough to cause the weight *W* to hang quite low in the pit, the weight is raised by turning the hand-wheel *H*, which causes the drum to revolve through the intervention of the worm and the worm-wheel, thus shortening the chain *C*. The weight *W* in this case has a movement of only one-half that of the carriage, but must be twice as heavy as one that simply hangs at the end of the chain. The rails on which the balance-car travels should be turned up at their ends, as shown in the figure, so as to form an obstruction beyond which the car can not pass. It is well to have a second rope or chain lying loose, having one end fastened to the car and the other to the drum *B*, so that in case the first breaks the second takes its place.

2398. In Fig. 869 is shown another arrangement of a tension-car. A heavy car carrying the sheave is placed on a short inclined plane. The rope coming along the center of one track is carried over the deflecting sheave *A*, then passed around the sheave of the balance-car, and is then led back over the road. The inclination of the plane and the weight of the balance-car are such that the proper tension in the rope is maintained by the tendency of the car to descend the plane; any expansion or contraction of the rope is immediately taken up by the car.

2399. When it is required to provide tension arrangements for the expansion and contraction of the rope only, the permanent stretch of the rope being taken up by other means, the arrangements shown in Figs. 870 and 871 may be used. In Fig. 870, the rope is led over two sheaves *A* and *B*, firmly held by suitable supports. In the center, between these sheaves, is erected timber-work, so constructed that a third sheave *C* can work up and down. The sheave *C* has a weight *W* hung to it, and therefore causes a tension in the rope. When the rope expands, the sheave *C* and weight *W* descend, and when it contracts they ascend.

In Fig. 871 a somewhat different arrangement is shown. Here, cast-iron standards having suitable bearings are

provided for the sheaves *A* and *B*. At the upper extremity of the larger standard is located a lever *C*, carrying a sheave *D*

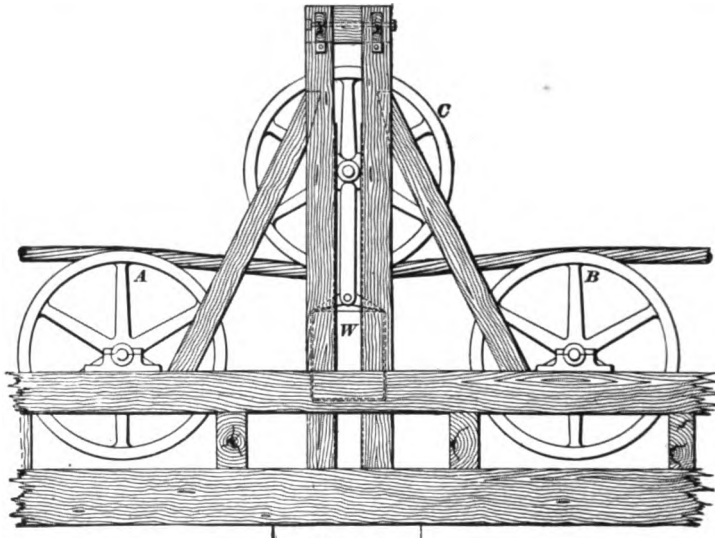

FIG. 870.

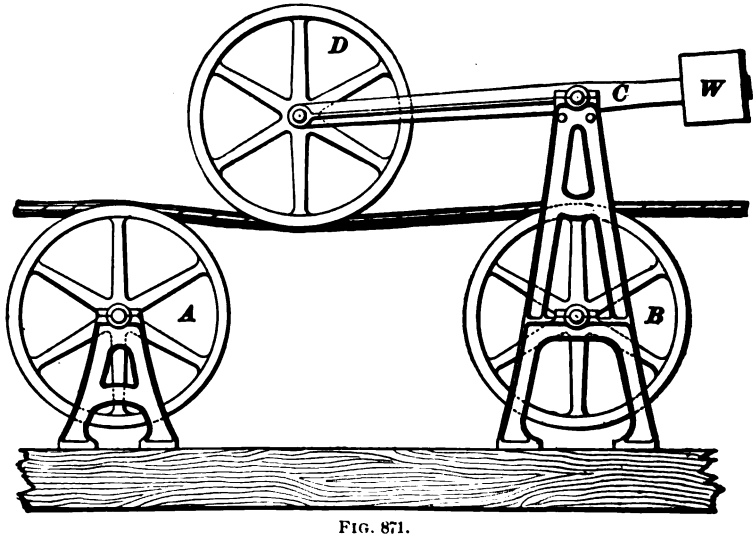

FIG. 871.

at one end and a counterpoise *W* at the other. The counter-

poise is so constructed that it can be moved along the short arm of the lever, so that the tension in the rope can be properly adjusted.

2400. The rope of an endless-rope haulage system should always be led around a tension or balance car located at the far end of the road. Sometimes the rope is led around a tail-sheave firmly fixed, no means of a uniform tension in the rope being provided for. This is altogether wrong, and should not be practised.

A tension-car should always be placed close to the driving machinery. This is very essential for the proper working of the system, as otherwise it would be impossible to secure the requisite adhesion of the rope to the drum in order to haul the load. The slack or running-off portion of the rope should always be led around the sheave of the balance-car, for the slack can not be taken up on the loaded side.

CABLE-GRIPS FOR ENDLESS-ROPE HAULAGE.

2401. Fig. 872 furnishes an illustration of the mode of attaching a car to a cable in an endless-rope haulage system.

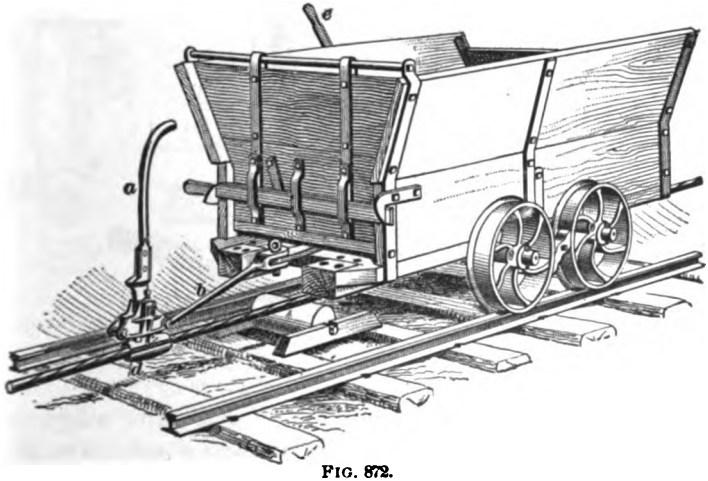

FIG. 872.

The grip, it will be seen, is coupled by a bar *b* to the car. At the moment the coupling is made, the lever *a* is lying

down on the coupling-bar *b*, so that, when *a* is raised, the jaws of the grips close, and immediately the car advances with the cable. To disconnect the car, the lever *a* is pushed down, the jaws are released, and the car is brought to rest. Sometimes, however, its momentum must be destroyed by inserting sprags in the wheels.

2402. One of the simplest of the grips is the old-fashioned grip-tongs shown in Fig. 873. It consists of two jaws *a* and *b*, having handles *a'* and *b'* respectively. The jaws

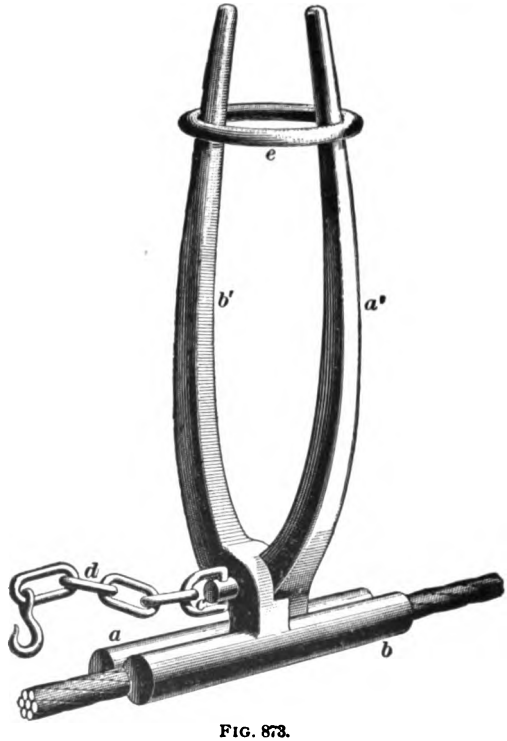

FIG. 873.

are held together by a pin *c*, having a nut on its other end. That part of the pin which passes through the handles is of smaller diameter than the part to which the chain *d* is fastened. A shoulder, therefore, is formed on the pin which prevents any side movement of the jaws. The grip is fast-

ened to the car by the chain *d*, the hook being attached to the draw-bar of the car. The jaws of the grip have a crescent shape, so that the cable can be held between them. The friction between the jaws of the grip and the cable being greater than the resistance of the car, the latter is moved along with the speed of the cable. To obviate the necessity of continuously holding the jaws together so as to haul the load, a link *e* is wedged over the handles. Notwithstanding that this grip is very simple in construction, it is found to be very cumbersome; it can only be used for hauling light loads.

2403. Where heavy loads are to be hauled, it is necessary that the construction of the grip be such that a greater pressure can be exerted on the cable by the jaws of the grip than in that shown in Fig. 873. A grip which will do this, and one which is extensively used, is shown in Fig. 874.

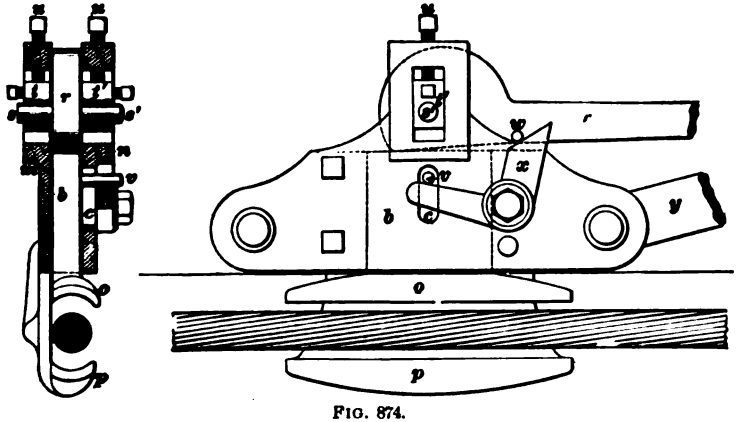

FIG. 874.

This consists of two plates or frames *m* and *n* bolted together. Each frame has on its inner side a channel; these lie opposite to each other, forming a recess in which the shank *b* of the upper jaw *o* can slide up and down. The lower jaw *p* is part of the frame *m*, and, therefore, remains stationary in relation to the frames *m* and *n*. Between the upper extremities of the frames is provided a lever *r* for operating the sliding-jaw *o*. This lever has trunnions *s* and *s'* which

work in bearings *t* and *t'* fitted to the frames. That end or part of the lever which works between the frames is of such a shape that, when the lever is swung over to the opposite sides, it forces the jaw *o* downwards, and causes it to grip the cable firmly. After the jaws *o* and *p* are worn, so that the pressure required to haul the load can not be secured by swinging the lever *r* to the opposite side, the end of the lever between the frame is lowered by forcing the bearings *t* and *t'* downwards by means of the set screws *u*, *u*, after which the cable can again be gripped firmly. To cause the jaw *o* to clear the cable after the grip has been released, a pin *v* is fastened to the shank *b* of the jaw *o*, which projects through an elongated hole *c* in the frame. Firmly secured to the lever *r* is another pin *w*, and to the frame *n* is pivoted a bell-crank *x*, having the upper edge of the arm, which is nearly perpendicular, inclined. As the lever *r* is raised to a vertical position, the jaw *o* is moved downwards, also the pin *v*, thereby causing the bell-crank *x* to swing on its center. In returning the lever *r* to its original position, the pin *w* strikes the nearly perpendicular arm of the bell-crank *x*, causing it to take the position shown in the figure, thereby raising the jaw *o* by the pin *v*. The grip is made of steel, excepting the jaws *o* and *p*, which are lined with soft metal; these, when worn out, can easily be replaced. This grip is fastened to the car by a rod having a hook at one end, part of this bar being shown at *y*.

2404. When the cars are run singly, each car must be provided with a grip; but if they are run in trains, a powerful grip may be attached to the first car, or the grip may be mounted on a special car, to which the whole train of cars may be attached. The special car carrying the grip is called the grip-car, and the grip is applied to the rope by either a combination of levers or a hand-wheel. In Fig. 875 is shown a grip-car, which consists of a strong timber-frame mounted on wheels. The grip is fixed in the center of the car in such a manner that no longitudinal movement can take place; it may, however, be moved sideways automatically, in order to clear the guiding-sheaves when passing

around curves. The car is provided with brakes *b* and *b* for stopping the car more quickly, and to prevent any movement of the train on slight inclines when the grip is released

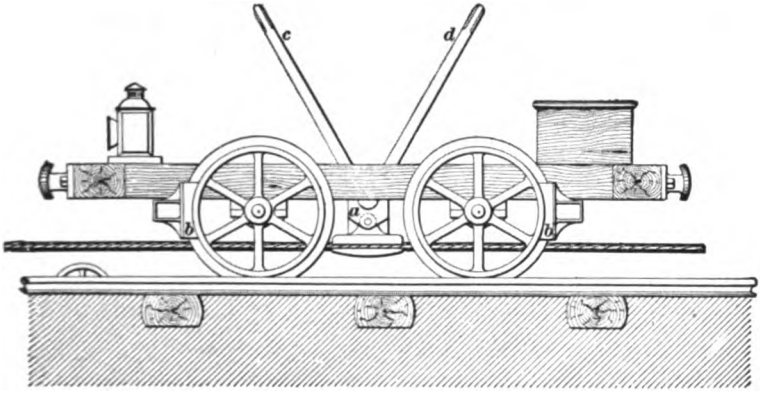

FIG. 875.

from the rope. The grip is operated by the lever *c*, and the brakes by the lever *d*; it is placed sufficiently high to clear the track-rollers.

CALCULATIONS RELATING TO ENDLESS-ROPE HAULAGE.

2405. The Number of Cars and the Distance They Are Set Apart on a Main Haulage-Band.

Let O = the output of coal in tons per day;
o = the weight of coal in tons a single car will carry;
o_1 = the weight of coal in the cars attached to the haulage-band;
D = the distance traveled by a point in the rope in one day;
d = the distance traveled by the rope from the return sheave to the hoisting-shaft;
n = the number of full cars on the main-rope band;
r = the distance between cars on the rope.

Then,

$$o_1 = \frac{O\,d}{D}. \qquad \textbf{(206.)}$$

$$n = \frac{O\,d}{D\,o}. \qquad \textbf{(207.)}$$

$$r = \frac{d}{n}. \qquad \textbf{(208.)}$$

To understand these expressions, notice that if d is the distance a point in the rope moves through in passing from the return wheel to the hoisting-shaft, and that if D is the distance a point would move through in a day, supposing it always to be traveling shaftwards; then, $\frac{d}{D}$ will represent the fraction of the coal hauled in one outward journey of the point; that is, $o_1 = \frac{O\,d}{D}$.

Again, $n = \frac{o_1}{o}$, because if the weight of coal hauled in one journey is equal to o_1, and o is the weight of coal one car will carry, then $\frac{o_1}{o}$ is equal to the number of loaded cars on the rope, for the rope will throw off at the shaft that number for each distance.

Hence, $n = \frac{O\,d}{D\,o}$ and $r = \frac{d}{n}$, the distance the cars are apart on the rope, for if d is the distance from the return sheave to the bottom of the shaft, and n is the number of cars on the main rope, $\frac{d}{n}$ must be equal to the distance the cars are apart.

EXAMPLE.—It is intended that the output of a mine shall be 3,000 tons of coal per day. The length of the road from the return wheel to the shaft is 6,600 feet, the amount of coal a car carries is 1 ton, the velocity of the rope is 3 miles an hour, and the time of one day is 10 hours. If the mean time of running, when allowance is made for stoppages, is 90 per cent. of the given working day, what will be the number of loaded cars on the main haulage-band, and what will be their distances apart, the weights being given in long tons?

SOLUTION.— $O = 2{,}240 \times 3{,}000 = 6{,}720{,}000$ lb.; $o = 2{,}240$ lb.; $d = 6{,}600$ feet; $D = 5{,}280 \times 3 \times 10 \times .90 = 142{,}560$ ft. Hence, by substituting these values in formula **207**, we have

$$n = \frac{O\,d}{D\,o} = \frac{6{,}720{,}000 \times 6{,}600}{142{,}560 \times 2{,}240} = 138.888, \text{ or } 139,$$

the average number of cars on the main-rope band. Ans.

From formula **208**,

$$r = \frac{d}{n} = \frac{6{,}600}{138.888} = 47.52 \text{ ft.},$$

the mean distance the loaded cars are set apart on the rope. Ans.

2406. To realize the meaning and value of the equations in the last example, consider another example similar to the last, except that the length of the main band, or what is the equivalent of that, the length of the main haulage-road, is changed. Under such conditions it will be found that, although the length of the band is shortened and the number of cars on it is less, the distance they are apart is the same.

EXAMPLE.—Suppose that in the example given in Art. **2405** the length of the road from the return wheel to the shaft was 3,300 feet, instead of 6,600 feet, what would be the number of loaded cars on the main haulage-band, and how far apart would they be placed?

SOLUTION.—Applying formula **207**, we have

$$n = \frac{O\,d}{D\,o} = \frac{6{,}720{,}000 \times 3{,}300}{142{,}560 \times 2{,}240} = 69.444 =$$

average number of cars on the main-rope band. **Ans.**

Also, by applying formula **208**, we have

$$r = \frac{d}{n} = \frac{3{,}300}{69.444} = 47.52 \text{ ft.} =$$

the distance the loaded cars are apart on the rope. **Ans.**

From the above example, it is plain that, by halving the length d, the number of cars on the rope is halved, and yet the distance the cars are apart remains the same. From these facts an important point is learned; that is, that if none of the factors are altered but the length, a long band delivers as many cars at the hoisting-shaft as a short one. That is, if the cars are set at the same distances apart on the rope, and the velocity remains the same, the output is alike for all distances. This principle of action is the same, however, in relation to gravity-planes, engine-planes, and main and tail rope haulages; for if the lengths of the trains are made proportional to the lengths of the haulage-roads, then with the same velocity equal weights are hauled to the shaft in equal times. Consequently, when the length of the endless-rope haulage is doubled, and the number of cars on the band is doubled, and where the length of a main and tail rope haulage is doubled, and the number of cars in a train are doubled, if the velocity remains the same, the output will be the same in equal times in each case.

2407. The Weights of Haulage-Ropes in Relation to Their Velocities.—*For equal outputs in equal times, the weights of the haulage-ropes* vary inversely as the velocities. For example, when the velocity is doubled, the weight of the rope is halved, for two reasons: (1) the safe working loads of ropes vary directly as their weights; (2) as the velocity of a rope increases, the load on it is reduced; that is, when equal amounts of work are done in equal times.

Let l = the load or tension in the rope;

v = the velocity;

u = the units of work done.

Then $$U = l\,v. \qquad \textbf{(209.)}$$

EXAMPLE.—In one case a tension of 4,000 pounds on a haulage-rope is required to move a train of 25 loaded cars with a velocity of 20 miles an hour, and in another case a tension of 8,000 pounds is required to move 50 loaded cars with a velocity of 10 miles an hour. Prove that if the diameter of the rope that hauls with a velocity of 20 miles an hour is 1 inch, the diameter of the rope that hauls with a velocity of 10 miles an hour must not be less than 1.414 inches.

SOLUTION.— $4{,}000 \times 20 = 8{,}000 \times 10$; therefore, U in one case is equal to that of the other.

Again, as the tension on a rope is equal to the load, and as the safe working load of a rope varies as its transverse or sectional area or its weight per unit of length, it follows that the diameters of ropes will vary as the square roots of the loads or sectional areas. Then, if the diameter of the rope for a load of 4,000 pounds is 1 inch, the diameter of the rope for a load of 8,000 pounds will be

$$\sqrt{\frac{8{,}000}{4{,}000}} = 1.414 \text{ inches.} \quad \text{Ans.}$$

This means, also, that if equal weights of coal are hauled in different numbers of trips through equal distances in equal times, the diameters of the ropes vary inversely as the square roots of the numbers of trips. To make this clear, suppose one engine A hauls out four trips while another B hauls out one, and that in 10 hours they both haul out 1,000 tons through a distance of 5,000 feet; then the tension on the A rope is only one-fourth of that on the B rope, because A's load is only $\frac{1}{4}$ that of B's. Therefore, the diameter of A's rope requires to be only $\frac{1}{4}$ that of B's, because $\sqrt{\frac{1}{4}} = .5$.

2408. From the conclusions here arrived at, it might be considered that fast running would secure considerable economy in hauling, for not only would the traction due to the friction of a heavy rope be reduced by hauling with one of much less weight, but first cost of ropes would be much reduced. But such is not the case, because another factor of stress is introduced by high speeds that is hardly felt in low ones. For example, when an endless-rope haulage is done with a velocity of even four miles an hour, the ropes soon become kinked, flattened, and permanently injured by the grips. To start a heavy car from a state of rest, and give it a velocity of 4 miles an hour, greatly strains the rope; therefore, for this velocity, ropes must be made larger than those required for the stress due to ordinary traction. Some idea of this stress may be obtained by noticing that it varies as the square of the velocity. The stress due to starting a car in motion at 4 miles an hour is equal to the square of 4, or 16, as contrasted with the stress due to starting one with a velocity of 3 miles an hour, which is equal to $3^2 = 9$. To further show the importance of this stress, let an endless-rope haulage be run at 6 miles an hour; for this speed, the number of cars on the rope in a given distance would be half the number required to be put on a rope moving with a velocity of 3 miles an hour. Then, from this point of view, the diameter of the rope subject to half the former load would for a velocity of 6 miles an hour be reduced to $\sqrt{\frac{1}{2}} = .707$ of its original diameter.

On the other hand, the stress due to setting the cars suddenly in motion on a 6-mile velocity, as contrasted with a 3-mile velocity, would be as the squares of the velocities; consequently, if the diameter of a rope for a 3-mile velocity were one inch, that for a 6-mile velocity would be $\sqrt{\frac{3}{6}} \times \frac{6^2}{3^2} = 2.828$ inches, assuming that the tension on the rope due to traction is equivalent to the energy required to suddenly set a car in motion from a state of rest to that of a velocity of 3 miles an hour.

2409. From what has been shown, it is evident that the velocity at which the cars should run on an endless-rope haulage requires calculation. For example, if an endless rope has a velocity of 4 miles an hour, the damage done to the ropes by the grips is very serious; but there are other troubles that require notice. In the first case, it is not safe for a person who is inspecting the road to cross a double track of this character. Again, the cars leave the rope at too high a velocity, and are, therefore, not sufficiently under control at the period when they are detached. The best results of the endless-rope haulage are obtained with a velocity not exceeding 2 miles an hour; for then persons having to work on the tracks, such as oiling the rollers, inspecting the roof, sides, and timber, and doing the necessary inspection and repairs of rails, ties, etc., are able to take care of themselves. This is an important matter, for great delay and expense is saved by proper inspection and repairs. It is true that a velocity of 2 miles an hour necessitates the use of heavier ropes for traction; but the damage to ropes produced by the car-grips is reduced to a minimum, and, indeed, becomes so small a matter that in practice its consideration may be neglected.

2410. These remarks refer to underground haulage, but on the surface a velocity of 3 miles an hour may be used with good results. This velocity should never be exceeded on a typical endless-rope haulage, even on the surface. Running trains of a number of cars together with endless rope is not worthy of much consideration; for if the student considers the heavy weights being suddenly jerked into motion by the rope, he will have some idea of the great destruction of ropes that must arise from an inert resistance of this character.

2411. In the English mines, the endless ropes generally lie on the tops of the cars, called tubs; in the United States, the ropes generally lie under the cars, and, in cases where this system of haulage is modified for hauling groups of cars in trains, the ropes are sometimes gripped to the sides of the cars.

2412. Tension on the Ropes and the Horse-powers of Endless-Rope Haulages.

Let W = the weight of the loaded cars on one side of a rope band;

w_1 = the weight of the empty cars on the ingoing side of a rope band;

w = the weight of a rope band;

$C = \frac{1}{40}$ = the coefficient of friction;

a = the mean grade per cent.;

T = the tension in the rope in pounds.

The following expression is the equivalent of the tension on the haul-out side of the rope, and it is true for the same side of all the bands in the series:

$$T = \frac{(W + w_1 + w)}{40} + a\,(W - w_1). \qquad \textbf{(210.)}$$

Observe that the weights of the cars carrying the coal are balanced by the weights of the empty cars. Again, the weight of the rope on one side of the band is balanced by the rope on the other side of it, and, therefore, the only weight that develops a gravity force is that of the coal; hence, in equation **210**, $a\,(W - w_1)$ represents the gravity force.

EXAMPLE.—The track of a single endless-rope haulage-band is 1 mile in length, and the rope hauls out 800 long tons of coal in 10 hours. The cars carry 1 long ton of coal, and an empty car weighs 1,760 pounds. The velocity of the rope is 2 miles an hour, and the size of the rope is such that it weighs 2 pounds per foot of length. What is the tension on the rope and the horsepower of the hauling-engine, supposing the mean grade of the road to be level?

SOLUTION.— O, the output, $= 800 \times 2{,}240 = 1{,}792{,}000$ lb.; o, the weight of coal carried by one car, $= 2{,}240$ lb.; d, the length of the track, $= 5{,}280$ ft.; D, the travel of the rope in 90 per cent. of 10 hours, $= 5{,}280 \times 2 \times 10 \times .90 = 95{,}040$.

Applying formula **207**,

$$n = \frac{O\,d}{D\,o} = \frac{1{,}792{,}000 \times 5{,}280}{95{,}040 \times 2{,}240} = 44.44,$$ the number of loaded cars.

$W = 44.44 \times 4{,}000 = 177{,}760$ lb.; $w_1 = 44.44 \times 1{,}760 = 78{,}214.4$ lb.; and $w = 5{,}280 \times 2 \times 2 = 21{,}120$ lb.

Applying formula **210**,

$$T = \frac{(W + w_1 + w)}{40} + a(W - w_1) = \frac{(177{,}760 + 78{,}214.4 + 21{,}120)}{40} + 0 =$$

6,927.36 lb., the tension required. Ans.

Observe that the expression $a(W - w_1)$ becomes 0 in this case, because the road is level, which makes $a = 0$.

Again, the horsepower can be found as follows:

v, the velocity in feet per minute $= \frac{5{,}280 \times 2}{60} = 176$ ft.

Substituting in formula **202**,

$$H = \frac{Tv}{33{,}000} = \frac{6{,}927.36 \times 176}{33{,}000} = 36.95 \text{ H. P.} \quad \text{Ans.}$$

EXAMPLE.—Let the given values be the same as in the previous example, except that the road has a mean up grade to the shaft of 2 per cent. The tension on the rope and the horsepower of the haulage-engine is required.

SOLUTION.—Applying formula **210**,

$$T = \frac{(W + w_1 + w)}{40} + a(W - w_1) =$$

$$\frac{(177{,}760 + 78{,}214.4 + 21{,}120)}{40} + .02\,(177{,}760 - 78{,}214.4) = 8{,}918.27 \text{ lb.},$$

the tension required. Ans.

Applying formula **202**,

$$H = \frac{Tv}{33{,}000} = \frac{8{,}918.27 \times 176}{33{,}000} = 47.56 \text{ H. P.} =$$

the horsepower required. Ans.

EXAMPLE.—Let all the values be the same as in the first example, except that the road is down grade to the shaft at the rate of 2 per cent. Find the tension on the rope and the horsepower of the engine.

SOLUTION.—Applying formula **210**,

$$T = \frac{(W + w_1 + w)}{40} - a(W - w_1) =$$

$$\frac{(177{,}760 + 78{,}214.4 + 21{,}120)}{40} - .02\,(177{,}760 - 78{,}214.4) = 4{,}936.45 \text{ lb.} =$$

the tension required. Ans.

Here the gravity force $a(W - w)$ is minus, because it acts towards the engine.

Applying formula **202**,

$$H = \frac{Tv}{33{,}000} = \frac{4{,}936.45 \times 176}{33{,}000} = 26.33 \text{ H. P.},$$ the required horsepower. Ans.

EXAMPLE.—All the values for a main haulage-rope band are the same as those given in the first example, and, like it, the track is level, and, therefore, the tension due to that rope alone is the same as first

found, namely, 6,927.36 pounds. Two districts bands A and B, however, deliver in the present case to the main band; the band A hauls out, along a track 769 feet long, $\frac{1}{3}$ of the 800 tons. This road has an up grade to the main road of 3 per cent. The band B hauls out $\frac{1}{3}$ of the 800 tons, along a road 2,312 feet in length, with a down grade to the main haulage-band of 4 per cent. What is the tension in the A and B ropes? What is the total tension on the main rope? What is the required horsepower to do the haulage, if the rope on the band A weighs .88 lb. per foot, and the rope on the band B weighs 1.2 lb.?

SOLUTION.—First find the number of loaded cars on the A band.

$O = 800 \times \frac{1}{3} \times 2{,}240 = 716{,}800$ lb.; $d = 769$ ft., and $D = 5{,}280 \times 2 \times 10 \times .90 = 95{,}040$ ft.

Applying formula **207**,

$$n = \frac{O\,d}{D\,o} = \frac{716{,}800 \times 769}{95{,}040 \times 2{,}240} =$$

2.589 = the number of loaded cars on the band A.

To find the tension in this rope, formula **210** is applied.

$W = 4{,}000 \times 2.589 = 10{,}356$ lb.; $w_1 = 1{,}760 \times 2.589 = 4{,}556.64$ lb.; and $w = 769 \times 2 \times .88 = 1{,}353.44$ lb.

Then, $$T = \frac{(W + w_1 + w)}{40} + a\,(W - w_1) =$$

$$\frac{(10{,}356 + 4{,}556.64 + 1{,}353.44)}{40} + .03\,(10{,}356 - 4{,}556.64) = 580.63 \text{ lb.},$$

the tension in the A band. Ans.

Next, the number of loaded cars on the B band is found by again applying formula **207**. In this case, $O = 800 \times \frac{1}{3} \times 2{,}240 = 1{,}075{,}200$ lb.; $d = 2{,}312$ ft., and $D = 5{,}280 \times 2 \times 10 \times .90 = 95{,}040$ ft.

Then, $n = \frac{O\,d}{D\,o} = \frac{1{,}075{,}200 \times 2{,}312}{95{,}040 \times 2{,}240} = 11.6767$ = the number of loaded cars on the band B.

The tension in this band is also found by formula **210**.

$W = 11.6767 \times 4{,}000 = 46{,}706.8$ lb.; $w_1 = 11.6767 \times 1{,}760 = 20{,}550.992$ lb., and $w = 2{,}312 \times 2 \times 1.2 = 5{,}548.8$ lb.

Then, $$T = \frac{(W + w_1 + w)}{40} - a(W - w_1) =$$

$$\frac{(46{,}706.8 + 20{,}550.992 + 5{,}548.8)}{40} - .04\,(46{,}706.8 - 20{,}550.992) = 773.93,$$

the tension required for B. Ans.

Here the gravity factor is minus again, because it works with the engine. The total tension in the main rope is $6{,}927.36 + 580.65 + 773.93 = 8{,}281.94$ lb. Ans.

Finally, applying formula **202**,

$$H = \frac{T\,v}{33{,}000} = \frac{8{,}281.94 \times 176}{33{,}000} = 44.17,$$

the total horsepower required to run the engine. Ans.

GENERAL APPLIANCES.

WIRE ROPES.

2413. Having considered the different methods of haulage, we will now give a description of the various appliances more or less common to all of the above systems, and which have not already been considered in detail.

2414. The wire rope used in mine haulage is usually made of six strands of iron or steel wires laid around a central core of hemp. Each of these strands is made up of either 7 or 19 wires, and, therefore, a wire rope is made up of either 42 or 114 wires, the final size of the rope depending upon the size of the wire used. It is evident that a one-inch rope containing 42 wires must be made of larger wires than a one-inch rope containing 114 wires. The former rope, on account of the larger size of the individual wires, is well adapted to service involving much wear; while the latter rope, being made of smaller wires, is more pliable, and is thus adapted to service in which the rope is required to do much bending. Thus, in the tail-rope system, the main rope has 7 wires to the strand, and the tail-rope 19 wires to the strand. Ropes are made with either a short or a long twist, according to the use for which they are intended. Ropes with a long twist work smoothly over the rollers and sheaves, and stretch but little, thus adapting them for tail-ropes. The short twisted rope is much more elastic, and should be used where the rope is liable to sudden jerks, as in the case of main ropes on engine and tail-rope planes. The short twisted rope in such a case acts as a sort of a spring, and stands without injury a shock which would break the more rigid long twisted ropes. The lay of the wire is generally opposite to the lay of the strands, although a rope has been recently introduced with the lay of both strands and wires in the same direction.

2415. A style of rope known as locked-wire rope has been introduced by some manufacturers. This rope has a

smooth surface approaching that of a round bar, in consequence of which it wears longer than the ordinary ropes, and, besides, does not wear out so quickly the wheels over which it is led; it also has a greater strength than the ordinary wire ropes, but has one disadvantage, in that it can not be spliced.

2416. The strength of the ordinary wire rope is about 75% of the strength of the individual wires composing it, the wire losing about 25% by bending. The working strength of a wire rope may be taken at from one-fifth to one-seventh the breaking strength.

2417. Tables 46 and 47 give the diameters, weights, and breaking loads of iron and steel wire ropes of six strands wound around a hemp center, having 19 and 7 wires to the strand.

TABLE 46.

IRON AND STEEL WIRE ROPES, 19 WIRES TO THE STRAND.

Diameter in Inches.	Weight in Lb. per Ft.	Breaking Load in Tons of 2,000 Lb.		
		Iron.	Cast Steel.	Plow Steel.
$\frac{1}{2}$	0.35	3.48	7.00	10.00
$\frac{9}{16}$	0.44	4.27	9.00	13.00
$\frac{5}{8}$	0.60	5.13	12.00	18.00
$\frac{3}{4}$	0.88	8.64	18.00	27.00
$\frac{7}{8}$	1.20	11.50	25.00	37.00
1	1.58	16.00	33.00	47.00
$1\frac{1}{8}$	2.00	20.00	42.00	60.00
$1\frac{1}{4}$	2.50	27.00	52.00	75.00
$1\frac{3}{8}$	3.00	33.00	63.00	90.00
$1\frac{1}{2}$	3.65	39.00	77.00	110.00
$1\frac{5}{8}$	4.10	44.00	86.00	123.00
$1\frac{3}{4}$	5.25	54.00	106.00	157.00
2	6.30	65.00	125.00	189.00

TABLE 47.

IRON AND STEEL WIRE ROPES, 7 WIRES TO THE STRAND.

Diameter in Inches.	Weight in Lb. per Ft.	Breaking Load in Tons of 2,000 Lb.		
		Iron.	Cast Steel.	Plow Steel.
½	0.31	2.83	6.00	9.00
9/16	0.41	4.10	8.00	12.00
⅝	0.57	5.80	11.00	16.00
11/16	0.70	7.60	14.00	21.00
¾	0.88	8.80	17.00	25.00
⅞	1.12	12.30	22.00	33.00
1	1.50	16.00	30.00	45.00
1⅛	1.82	20.00	36.00	
1¼	2.28	25.00	44.00	
1⅜	2.77	30.00	52.00	
1½	3.37	36.00	62.00	

2418. The durability of a wire rope depends very largely on the diameter of the drum or sheave over which it is wound. When a rope is bent around a drum, the outer strands must be in tension and the inner strands in compression. This tension, due to bending the rope around the drum, added to the tension to which the rope is already subjected on account of the load, gives the total tension on the part of the rope passing around the drum. This total tension must not exceed the elastic limit of the material composing the wires. *It is just as detrimental to the rope if it be bent partly around the drum or sheave as though bent completely around it.*

2419. From the nature of the rope, it is evident that the diameter of the drum or sheave does not depend upon the diameter of the rope, but only upon the diameter of the wires of which it is made; and we may, therefore, calculate the size of the drum which would be safe for a single wire.

It may be stated, as a general rule, *that the diameter of*

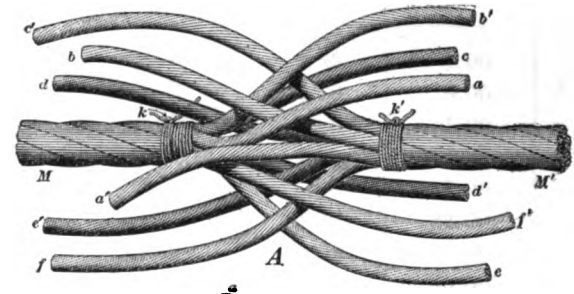
c'
b'
b
c
d
a
k
k'
M
M'
a'
d'
c'
f'
f
e
A

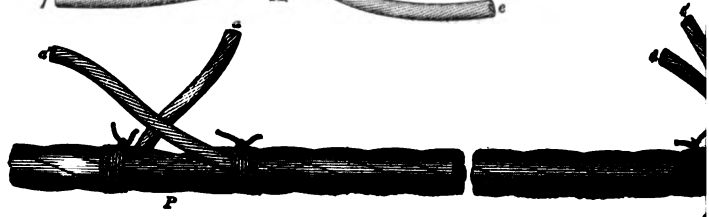
P

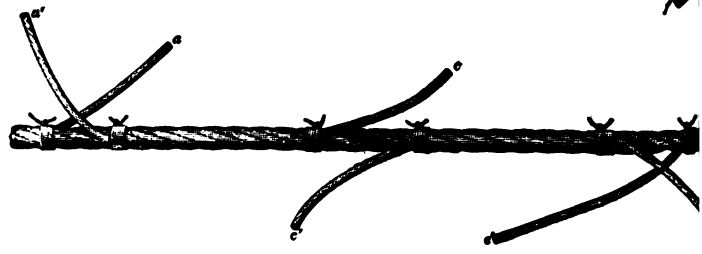
a'
c
c
c

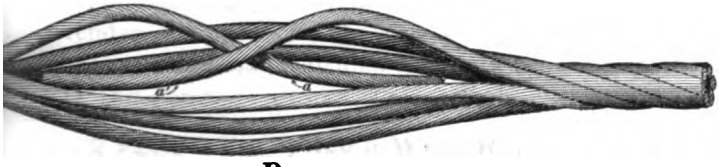

D

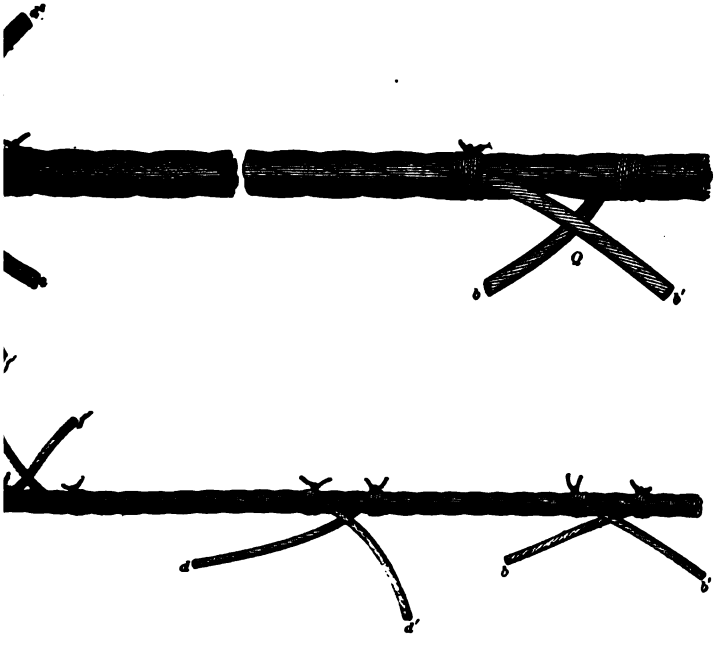

the drum on which a rope containing 19 wires to the strand is to be wound should not be less than 60 times the diameter of the rope, and one on which a rope containing seven wires to the strand is to be wound should not be less than 100 times the diameter of the rope.

It is, of course, preferable to use, if possible, a drum larger than given by the above rule. Circumstances may render it necessary to use a drum smaller than given above, but smaller drums can only be used at the expense of the rope.

2420. To Splice a Wire Rope.—The length of the splice depends upon the size of the rope. The larger ropes require the longer splices. The splice of ropes from $\frac{5}{8}$ inch to $\frac{7}{8}$ inch in diameter should not be less than 20 feet; from $\frac{7}{8}$ inch to $1\frac{1}{8}$ inches, 30 feet, and from $1\frac{1}{8}$ inches up, 40 feet. In Fig. 876 are given a number of illustrations showing the manner of splicing a wire rope. To splice a wire rope, proceed as follows:

Suppose it is desired to splice a rope $\frac{5}{8}$ inch in diameter. The length of the splice for this size rope is, as above given, 20 feet. Tie each end of the rope with a piece of cord at a distance equal to one-half the length of the splice, or ten feet back from the end, after which unlay each end as far as the cord. Then, cut out the hemp center, and bring the two ends together as close as possible, placing the strands of the one end between those of the other, as shown in Fig. 876 *A*, in which *k* and *k'* are the cords tied around the rope ends *M* and *M'* respectively, at a distance of ten feet from each end. Now remove the cord *k* from the end *M* of the rope, and unlay any strand, as *a*, and follow it up with the strand of the other end *M'* of the rope which corresponds to it, as *a'*; that is, *a* is unwound, leaving a channel in which *a'* is wound. About six inches of *a'* are left out, and *a* is cut off about six inches from the rope, thus leaving two short ends, as shown at *P* in Fig. 876 *B*, which must be tied for the present by cords, as shown. The cord *k* should again be wound around the end *M* of the rope, Fig. 876 *A*, to prevent the unraveling of the strands; after which remove

the cord k' on the other or M' end of the rope, and unlay the strand b; follow it up, as above, with the strand b', leaving the ends out, and tying them down for the present, as before described in the case of strands a and a' (see Q, Fig. 876 B); also, replace the cord k', for the same purpose as stated above. Now again remove the cord k, and unlay the next strand, as c, Fig 876 A, and follow it up with c', stopping, however, this time within four feet of the first set. Continue this operation with the remaining six strands, stopping four feet short of the preceding set each time. We have now the strands in their proper places, with the ends passing each other at intervals of four feet, as shown in Fig. 876 C. These ends must now be disposed of by increasing the size of the rope. Clamp the rope in a vise at the left of the strands a and a', Fig. 876 C, and fasten a clamp to the rope at the right of these strands; then remove the cords tied around the rope which hold these two strands down; after which turn the clamp in the opposite direction to which the rope is twisted, thereby untwisting the rope, as shown in Fig. 876 D. The rope should be untwisted enough to allow its hemp core to be pulled out with a pair of nippers. Cut off twelve inches of the hemp core, six inches at each side from the point of intersection of the strands a and a', and push the ends of the strands in its place, as shown in Fig. 876 D. Then allow the rope to twist up to its natural shape, and remove the clamps. After the rope has been allowed to twist up, the strands tucked in generally bulge out somewhat. This bulging may be reduced by lightly tapping the bulged part of the strands with a wooden mallet, which will force their ends farther into the rope. Proceed in the same manner to tuck in the other ends of the strands.

2421. Preserving Wire Rope.—It is highly essential that wire ropes be oiled, so as to keep them free from rusting, as on this depends in a great measure the life of the ropes. The oil best suited is that which is free from acid, and which will not gum or harden. Oil which hardens greases the outer wires very well, but forms a scale around

them through which the liquid oil can not pass to the inner wires, which therefore go on rusting. Raw linseed-oil has been found to be one of the best oils for this purpose, although a mixture of vegetable tar and raw linseed-oil is extensively used. Either of these may be applied to the rope by saturating the woolly side of a piece of sheepskin. It is well, before applying fresh oil to the rope, to first clean off the old by running the rope between brushes. When the rope is endless and has a continuous motion, as in the case of the endless-rope haulage systems, a different method may be pursued. In this case, the rope may be greased by allowing the oil, which has been placed in a barrel supplied with a cock, to drip on it as it leaves the engine-room on its outward passage.

THE ROADBED.

2422. The roadbed for a haulage system is made in practically the same manner as for ordinary railroads. The cross-ties are generally of wood, either 3 in. × 5 in. or 4 in. × 6 in.; they are laid from 18 to 36 inches apart, from center to center, on the solid floor of the mine, and are ballasted. T rails, weighing from 16 to 40 lb. per yard, depending upon the service required, are laid from 30 to 48 inches apart. The wider gauges allow heavier and wider mine-cars to be used, while the narrow gauges permit the cars to run more easily around the curves. The rails laid on slopes should be somewhat heavier than those laid on the level. Gutters should be provided at the lower side of the roadbed, to allow the mine water to flow away, and not destroy the ties. Curves should be made of as large a radius as possible, and it is well never to make the radius less than 25 feet. The gauge of the track should be slightly wider around the curves, and, in case of endless or tail rope haulage, the inside rail should be slightly elevated. In other cases, such as engine-planes, where the empty cars are run by gravity at high velocities, the outer rail should be slightly elevated.

In wire-rope haulage, trouble arises with curves on the roads where the main and tail rope system of haulage is employed. Unless due care is exercised in giving the rails on

a curve the requisite elevation to resist the tendency of the ropes to pull the ends of the train off the rails at the curve, the train will frequently be derailed. If, however, the inside rail is made the higher, the stress due to the inward pull of the ropes falls on the tread of the wheels and on the upper sides of the rails. On the other hand, if the rails are equal in height, the flanges of the inside wheels are pulled against the inward edge of the inside rail, and then the least jerk produced at a joint is sufficient to derail the whole train. When a curve occurs on a highly inclined portion of the road of a main and tail rope haulage, it is necessary to warn the engineer to keep the ropes taut when rounding the curves, or otherwise the high rail may become a source of danger. On the roads of other haulages, however, the inside rail should not be raised above the level of the outside one ; for on an engine-plane and the roads of a self-acting incline, while the elevation of the inside rail would provide complete security for the ascending train, it would be a sure means of derailing a descending one. Therefore, in these cases it is better to provide a guard-rail set within the rail on the outside of the curve. For curves on endless-rope haulages, a guard-rail is required only where the radius of the curve is very short ; otherwise they are not necessary, since the running velocity is always low.

2423. An arrangement called a covered tube, or conduit, which may be used at points where a haulage-road crosses highways, to enable vehicles to pass over the rope while it is in motion, is shown in Fig. 877. It consists of two castings A and A' of the form shown, which constitute the sides of the tube, or conduit, and which are riveted to ordinary I beams B. Over these castings are placed two covers C and C', in the manner shown in the figure. To strengthen the tube, or conduit, the braces I and I' are riveted to it and to the eye-beams. D and D' are projections riveted to the castings A and A', respectively, to keep the covers in their places. The legs of the covers C and C' are connected by links E and E', forming a toggle-joint; these

links are joined in turn to a rod F, which is connected, through the intervention of a system of levers, to a hand-lever placed at the outside of the track. By giving an upward movement to the rod F, the links E and E' are forced apart, in consequence of which they cause the covers C and C' to take the position shown by the dotted lines. It

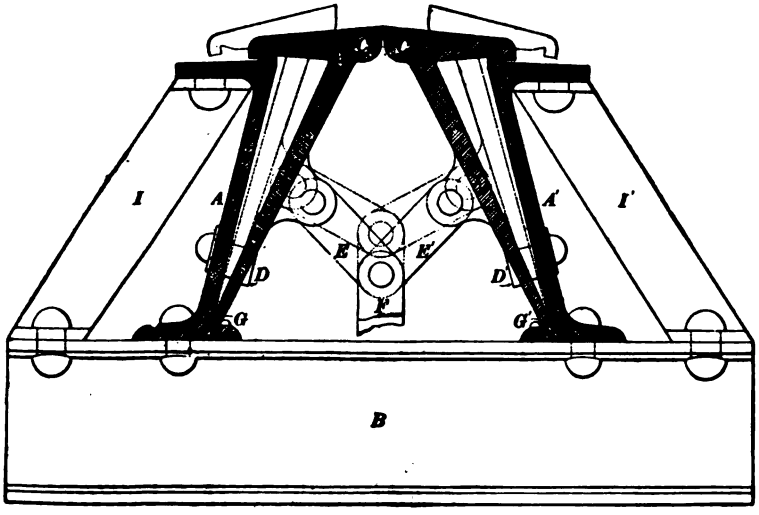

FIG. 877.

is well to construct the conduit in such a manner that vertical lines through the center of gravity of each cover will fall between the points G and G', respectively, when the covers are raised, i. e., in the position shown by the dotted lines, since the covers will then close automatically, it being only neeessary to open them.

2424. Fig. 878 shows the conduit in position. It will be seen that the length of the conduit is equal to the width of the highway. Since the cross-ties can not be laid at this point, short rails M and M', having a length equal to that of the conduit, are used. They are riveted at their ends to chairs P and P', which in turn are riveted to the eye-beams B. This construction can be built complete in the shop, and put in place as shown in the figure. The ends of the

rails abutting the short rails M and M' rest on the chairs P and P', and are bolted to them. The covers of the conduit

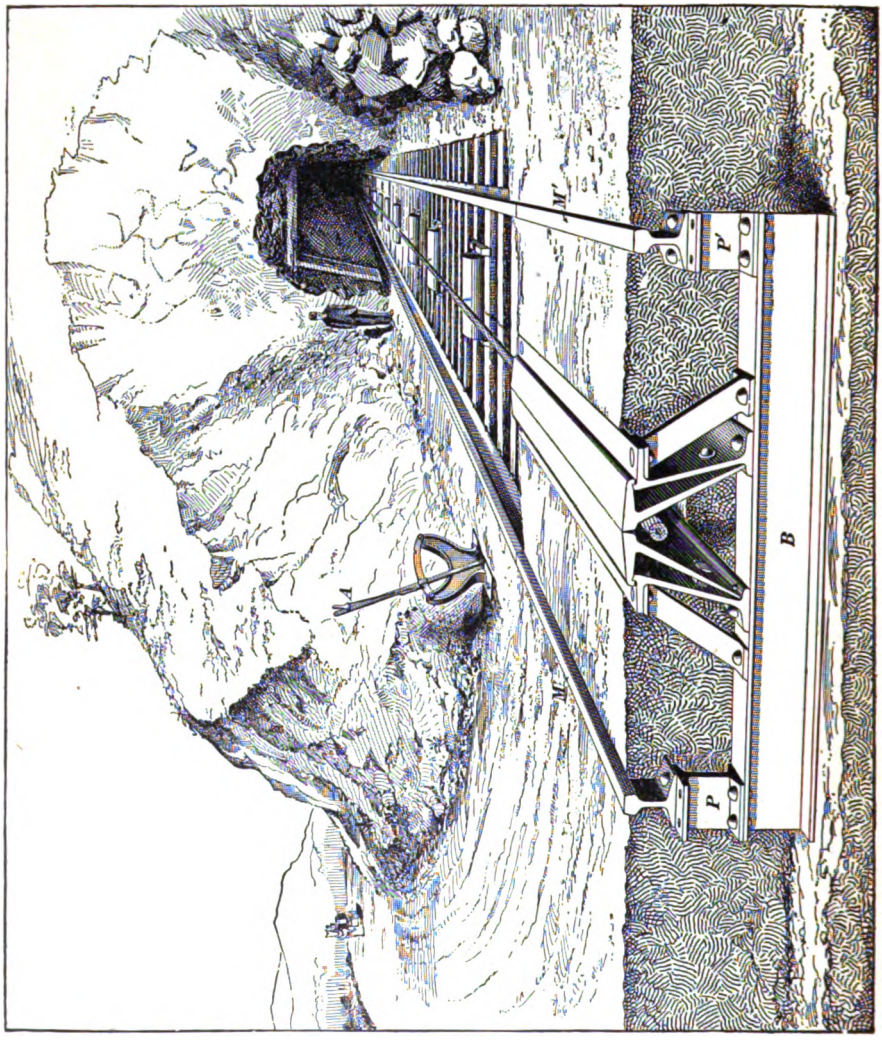

FIG. 678.

are always closed when no train is to pass, and thus allow vehicles to run across the roadbed. When a car comes along, the hand-lever A located at the side of the track is

pulled to the right, thereby causing the covers of the conduit to open, as before explained, and allowing the train to pass, after which the covers are again closed by the hand-lever.

TRACK MATERIALS.

2425. To find the weight of one mile of two rails in tons of 2,240 pounds, the weight in pounds per yard of the rail being given :

Rule.—*Divide the weight in pounds per yard of the rail by 7, and multiply the quotient by 11.*

EXAMPLE.—How many gross tons of rails, weighing 20 lb. to the yard, are required for one mile of single track ?

SOLUTION.— $\frac{20}{7} \times 11 = 31\frac{3}{7}$ tons. Ans.

2426. To find the number of cross-ties required for one mile of single-track road, the distance between the centers of the cross-ties being given :

Rule.—*Divide 5,280 (the number of feet in a mile) by the distance in feet between the centers of the cross-ties.*

EXAMPLE.—How many cross-ties are required for laying one mile of single-track road, if the cross-ties are laid 21 inches apart from center to center ?

SOLUTION.— 21 inches reduced to feet $= 1\frac{3}{4}$ feet. Then, $5{,}280 \div 1\frac{3}{4} = 3{,}017$, nearly. Ans.

2427. The spikes ordinarily used for spiking different size rails to the cross-ties, and the average number of spikes contained in a 200-pound keg, are given in the following table :

TABLE 48.

Size of Spike in Inches.	Weight in Pounds per Yard of Rails Used.	Average Number of Spikes per Keg of 200 Lb.
$4 \times \frac{1}{2}$	25	600
$4\frac{1}{2} \times \frac{1}{2}$	35	525
$5 \times \frac{1}{2}$	35 to 45	448

TRACK-ROLLERS, OR CARRYING-SHEAVES.

2428. To prevent the wire rope of a haulage plant from dragging on the roadbed, or, when the plane is very concave, to prevent it from coming in contact with the roof, **rollers**, or **carrying-sheaves**, are used. These are essential, since otherwise, were the rope permitted to drag on the ground, a greater force would be required to move it, and, besides, its life would be shortened considerably. Rollers, or carrying-sheaves, are made either of wood or cast iron. A form of wooden roller extensively used is shown in Fig. 879, which consists simply of a wooden roller Q having a $\frac{3}{4}$-inch or $\frac{7}{8}$-inch diameter wrought-iron axle R through it. The roller is held in place by the bearings S and S, which are usually nailed to the cross-ties. Ordinarily these bearings are made of wood, and are of such length that they rest on two cross-ties. The bearings should be so located in the center of the track that the rope runs near one end of the roller, so that when the rollers are partly worn they may be turned end for end or shifted sideways, so that the rope will have a new surface to run on. Wooden rollers are also frequently constructed by boring a hole through the center of the roller, and then driving into each end a short length of $\frac{3}{4}$-inch or $\frac{1}{2}$-inch gas-pipe, which acts as the axle of the roller. These rollers are generally made of maple, gum, oak, ash, or beechwood, and vary in diameter from 5 to 8 inches, and in length from 18 to 24 inches. The life of such rollers varies from six to eighteen months.

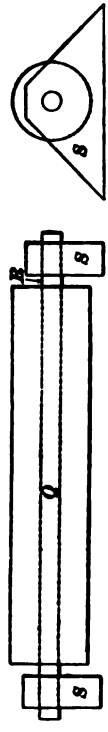

FIG. 879.

2429. In Figs. 880 and 881 are shown the common forms of cast-iron rollers, or carrying sheaves. In Fig. 880 the roller consists of a cylindrical shell about $\frac{3}{4}$ inch thick, having a flange at each end, as shown, to prevent the rope from being shifted off the rollers sideways. Instead of using

wooden bearings, as already described, iron bearings are used here. These bearings are provided with caps *a* and *a*, which can be taken off when the rollers are to be removed. The journals of the shaft are smaller in diameter than the shaft proper, so as to form shoulders on it, in order to prevent the rollers from moving sideways. These rollers are generally made about 6 inches in diameter.

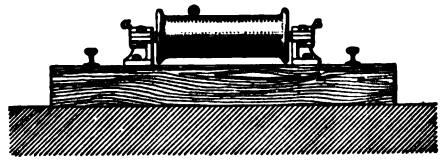

FIG. 880.

2430. In Fig. 881 is shown another form of cast-iron roller. Here the cylindrical shell of the roller *Q* is somewhat tapered, and has a small groove in its center, in which the rope runs. The roller is tapered, so that the rope will always slide down to the groove. The shell *Q* of the roller is fastened to the shaft *R* by means of the arms and hub *S* of the roller. The journals *t* of the shaft are smaller in diameter than the remaining part of it, thus forming shoulders, and preventing the rollers from moving sideways. The bearings *U* and *U* are of cast iron, of the form shown in

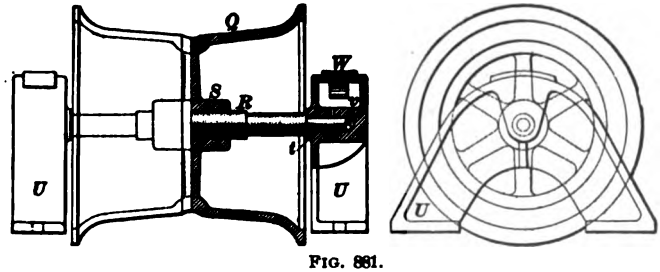

FIG. 881.

the figure, having such a width that they may rest on two cross-ties, to which they are generally bolted. The bearings are provided with a receptacle *v*, in which oil is poured through the top (by removing the cap *W*) for lubricating the journals. These rollers, or carrying-sheaves, are generally made 10 or 12 inches in diameter.

UNDERGROUND HAULAGE-ENGINES.

2431. There are two kinds of hauling-engines in use for mine haulage, each specially fitted for different classes of work. For example, engines on the first motion, or those connected directly to the drum-shaft, are best adapted for long runs and level roads; on the other hand, engines on the second motion do the best work on short runs, or in hauling loaded trains up steep inclines pitching from the shafts. The engine and drums illustrated by Fig. 882 furnish an example of an engine on the second motion. Here the drums are seen mounted on a heavy shaft, and are geared

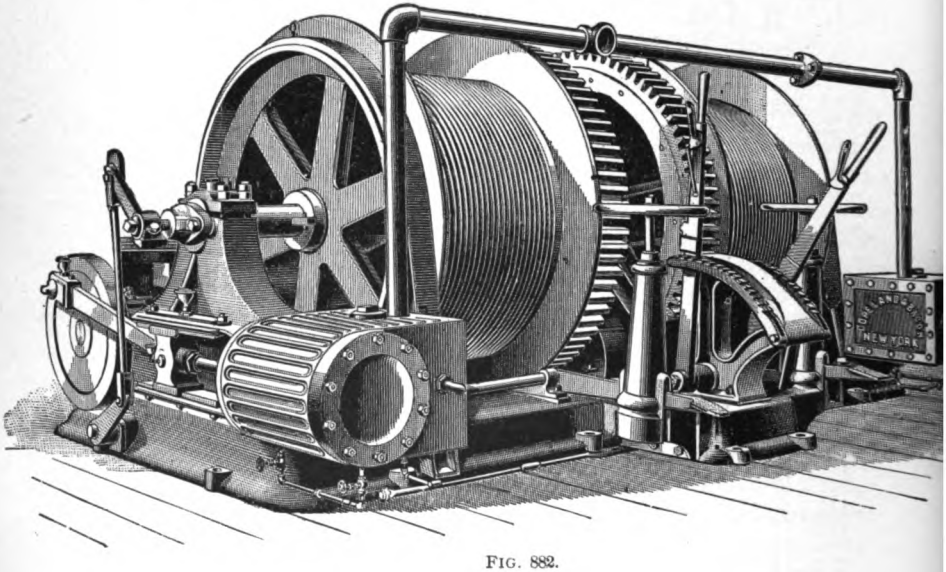

FIG. 882.

to the engine by massive spur-gears and pinions. This arrangement is designed for main and tail rope haulage; consequently, the drums are both made to run loose on the shaft when not required for hauling. When the main-rope drum is required to haul out a train of cars to the shaft, it is secured to the spur-wheel with a friction-clutch, or other-

wise the pinion-wheels on the engine-shaft are made to slide in and out of gear. The pinions are made to lock onto the engine-shaft with strong keys and slots, and so connected that, as one pinion is put into gear, the other is thrown out. These changes are made by a lever and slot and fork arrangement, which is controlled by the engineer. After a train has been hauled out with the main rope, the main-rope drum is thrown out of gear and made to run loose, so that, during the hauling in with the tail-rope drum, the main rope is hauled in with the train; *vice versa*, to haul out, the main-rope drum is put into gear, and, consequently, the tail-rope drum is thrown out of gear when the tail-rope is hauled out with outgoing trains of loaded cars.

The friction-clutch connection is common where the engine is on the first motion, for then the drums are mounted on the engine-shaft. The braking of the main and tail rope drums requires special care and attention on the part of the engineer, for otherwise he may hold the loose running drum too tight, and in that case unduly strain the rope engaged for the time in hauling, and at the same time waste the available energy of the engine and reduce the velocity of the train. On the other hand, if the running-off rope is not kept comparatively tight, it may overrun and kink and be destroyed. Not only should the engineer be a man of prudence, but, for safety and economy, the brake arrangement should be so constructed that it will secure in action the following good points:

(1) It must be strong and reliable; (2) the friction generated must be sufficient to stop and hold the train secure on any part of the road; (3) the brake must be actuated by a compound lever, so as to exert a great stress with the power of an ordinary man's arm; (4) the brake-handle must be fixed in a position so near the throttle-valve of the engine that the engineer can turn from one to the other without changing his position. Fig. 883 shows a brake and lever arrangement that possesses all the good points just referred to.

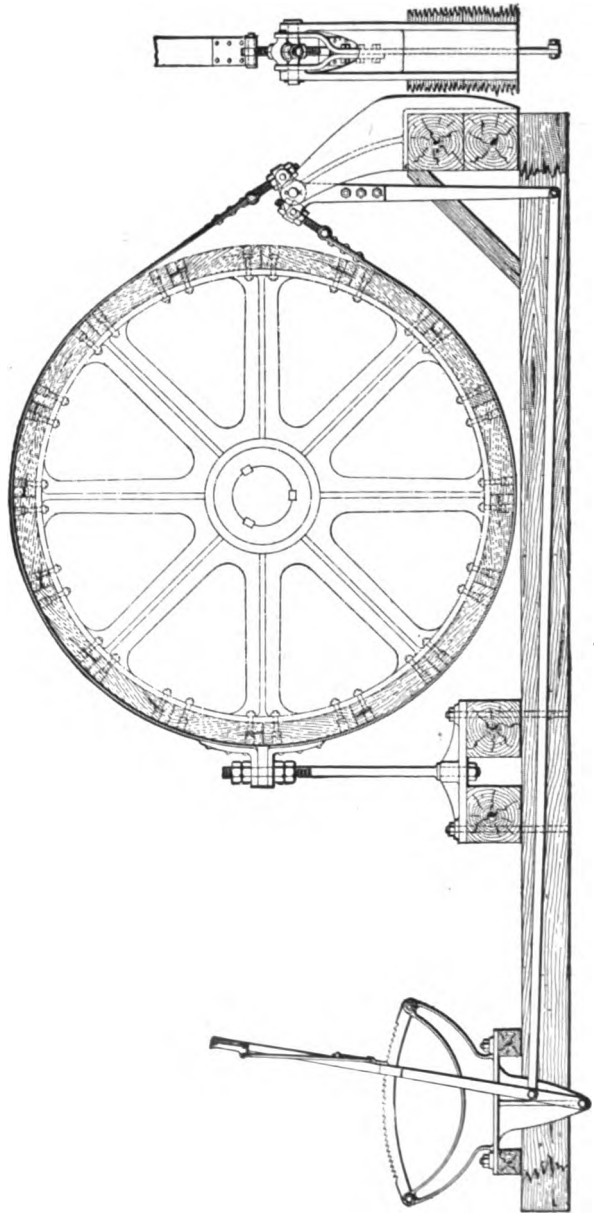

FIG. 883.

UNDERGROUND HAULAGE BY ENDLESS ROPE.

2432. Haulage-drums can not be used for an endless-rope haulage, as in this case two ropes must run continuously in opposite directions; therefore, it is out of the question to even think of using reels. Reels, or drums, however, can not be disposed of without substituting wheels that not only coil on but coil off at the same time, and yet seize the rope for hauling as securely as a drum would do. Now it is clear that a single-grooved pulley could not seize the rope sufficiently for hauling against a resistance greater than the friction due to a rope slipping in the groove whose length is equal to half the circumference of a wheel. Again, it is not possible to make two or more turns of the rope round a wheel, and haul continuously by this means, because the rope would all run on at one side, and, therefore, after a turn or two, would coil on itself. It is true that fleet-wheels have been contrived by which the coils are made to continuously slip and surge from one side of the tread of the wheel towards its center; but the surging and slipping on such a wheel generates a heavy strain on the rope, and this, added to the wear by the friction due to slipping, soon destroys a good rope, and renders this system of gripping the rope a practical failure.

2433. By a principle in mechanics, two grooved-heels can be made to secure sufficient gripping force, and run the rope on and off without injury from surging or any other cause. To understand the mode of action, suppose that a rope is made to perform the circuits of eight semicircular grooves on two four-grooved pulleys, as shown in plan at the top of Fig. 884. Now let us follow a point of the rope throughout its journey, from the time it enters the first groove to the moment of leaving the last one. The rope runs half round the first wheel, and then runs off to the first groove of the second wheel. It advances to the second groove of the first wheel, and then passes half round and runs off to the second groove of the second wheel. The point passes round the second groove of the second wheel,

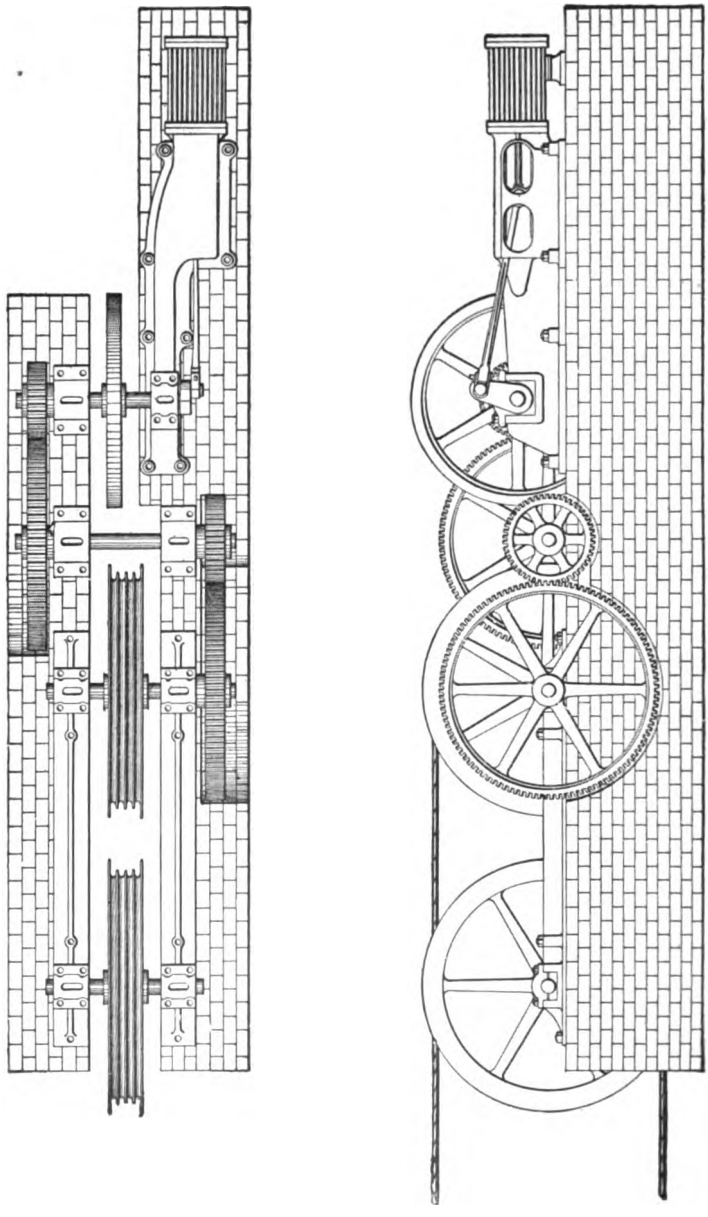

FIG. 881.

continues its journey to the third groove of the first wheel, from that to the third groove of the second wheel, and so on. It will be found that the rope leaves the fourth groove of the second wheel, and pursues its journey in the line of the haulage. The eight semicircles are equal to four complete turns round one drum, and the grip due to the four turns is nearly equal to the breaking strain of the rope. The two grooved wheels solve the problem of providing a secure grip for a haulage that is equal to that provided by a drum for hauling on an ordinary engine-plane. In the lower portion of the figure, the engine is seen to be on the third motion; this means that a small engine is made to run at a high velocity and thus develop as much power as could be developed by a large engine on the first motion.

2434. In hauling and hoisting, the position of the train or the cage can not be seen by the engineer, and, as safety is required, it must be secured by some mechanical contrivance for indicating the position of the train or the cage. It is important that the engineer should know how to regulate his supply of steam, and when to apply the brake, in case the road over which the train is running is pitching. He also should know to a foot where to stop the train at the different stations on the haulage-roads. Again, the engineer at the hoisting-engine must know the exact position of the ascending cage, so that he can run at a maximum speed without fear, and stop the cage within an inch of the level of the landing-stage. From this it can be seen that the shaft or haulage-road indicator is indispensable. Fig. 885 is an indicator for a haulage-road. The velocity ratios of the train and the indicator-weight are so proportioned that the latter only moves over a space of one foot while the train on the haulage-road is running a distance of 300 feet. The velocity ratios are 1 for the indicator to 300 for the train. This reduction in the velocity of the indicator-weight is secured as follows: A worm on the end of the drum-shaft runs in the teeth of a worm-wheel, and this wheel makes only 1 revolution for 30 turns of the drum. Again, the

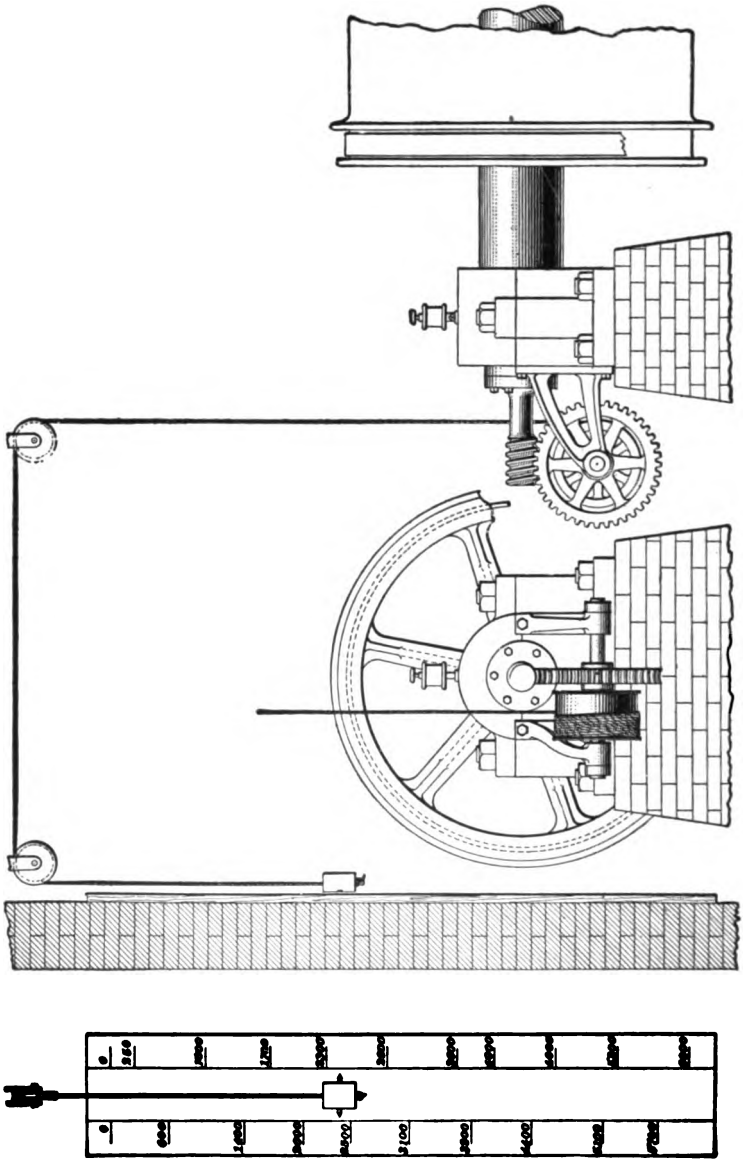

FIG. 885

diameter of the barrel for winding on the indicator-cord is only one-tenth of the mean diameter of the drum for the haulage-rope, and, therefore, $30 \times 10 = 300$, the velocity ratio of the haulage-rope. The worm-wheel and the drum for the indicator-cord are plainly shown in the figure.

HAULAGE BY MINE LOCOMOTIVES.

2435. There are three types of mine locomotives, each of which has been successfully used in mine haulage; and there will shortly be on the market a fourth type, which promises to be, in a measure, a competitor of the other three. The first three types are: steam locomotives, compressed-air locomotives, and electric locomotives. The fourth is a locomotive operated by a gasoline-engine.

2436. The steam locomotives used in mining work are practically small locomotives of the ordinary type; they usually have two driving-wheels, and sometimes three, on each side; the water-tank is set over the boiler, and the smokestack is shortened so that it does not extend above the top of the boiler; in short, the smokestack, top of boiler, and top of small cab are on the same level, and low enough to permit the locomotive to enter the mine-passages. They are usually made with a short wheel-base, so as to enable them to run around sharp curves.

2437. While these small locomotives are convenient, and very efficient around mines for outside haulage, they

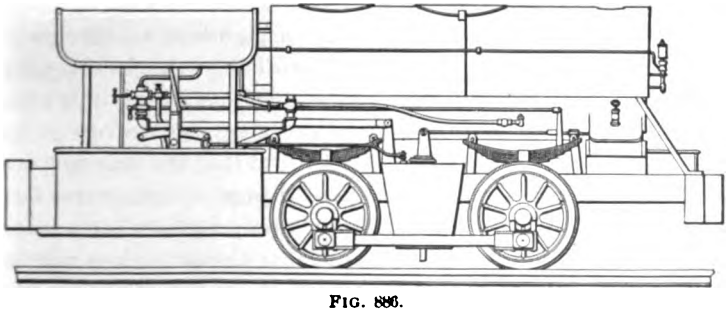

FIG. 886.

should not be used for inside haulage if their use for such

haulage can be avoided, because the exhaust from the smokestack vitiates the mine air, and the fire under the boiler is extremely dangerous in any mine in which explosive gas is generated. When steam locomotives are of necessity used in mine haulage, the haulage-road should always be the return-air course; they should never be used in mines in which explosive gas is found. Fig. 886 shows a view of a typical steam mine locomotive. Where such locomotives are used, the track should be as smooth and well ballasted as possible.

2438. The compressed-air locomotives used in mine haulage have their working parts built very similar to those of steam locomotives, the main difference being that the boiler and fire-box are replaced by one or two compressed-air tanks, which are usually charged with compressed air at suitable intervals along the haulage-road. The compressed-air locomotive can be operated with safety in any part of a mine where grades will permit, and is not dangerous in the event of the mine producing explosive gases. However, the installation of a compressed-air locomotive is much more expensive than that of the steam locomotive.

2439. The compressed-air locomotive requires a stationary plant on the surface, consisting of an air-compressor of proper design for the quantity and pressure of air necessary to run the locomotive; in addition, unless water-power is available to run the compressor, a boiler to generate steam for that purpose is required. The air from the air-compressor must be conveyed through a pipe-line to the point or points where it is convenient to charge the locomotive. Each charging-station consists of a heavy valve with a metallic flexible coupling, bleeder-valve, and screw-joint, which couples to a similar screw-joint on the locomotive. While it is entirely practicable to charge a compressed-air locomotive direct from the compressor, without any intermediate storage-reservoir, it is not economical unless a number of locomotives are used, so that, while one locomotive is being charged, the rest are making trips.

2440. The best and cheapest method is to operate the compressor at a nearly uniform speed, pumping continuously in the storage-reservoir from which the locomotive is charged. If the compressor is only run while the locomotive is charging, the wear and tear on the compressor and boiler are greater, steam and fuel are wasted, an unnecessarily large compressor is required, and the locomotive is held idle longer than desirable. One or more stationary tanks may be used for storage-reservoirs, but a pipe-line is preferable, because it is handier, and provides opportunity for a number of charging-stations at different points, and also makes it easy to charge different locomotives in different places or on different levels of the mine, besides conveying the air wherever desired.

2441. The whole operation of stopping the locomotive, connecting it to the charging-station, charging it to the required pressure, and disconnecting, and starting on its trip, can usually be performed in less than one and one-half minutes.

2442. The pressure and cubic capacity of the pipe-line or tank should be so proportioned that, when the locomotive returning for a new charge is connected, the pressure of the locomotive and of the pipe-line equalize almost instantly to the required pressure. It is, therefore, necessary to carry a higher pressure in the pipe-line than is needed for the locomotive. The necessary pressure of air and capacity of the pipe-line can very easily be determined. For instance, if the locomotive-tanks have 100 cu. ft. capacity, the charging pressure needed for the locomotives is 500 lb., and the average pressure remaining in the locomotive, when returning for the new charge, is 50 lb., a pipe-line of 300 cu. ft. capacity and 650 lb. pressure will, when connected with the locomotive, charge it instantly to 500 lb. This is shown by the following calculation:

The pressure in the locomotive-tank is 50 lb. and that in the pipe-line is 650 lb.; the volume of the tank is 100 cu. ft. and that of the pipe-line is 300 cu. ft. The resulting

pressure, when the two are connected, may be obtained from formula **19** in Gases Met With in Mines. Thus,

$$P = \frac{pv + p_1 v_1}{V} = \frac{50 \times 100 + 650 \times 300}{100 + 300} = 500 \text{ lb. per sq. in.},$$

the pressure needed for the locomotive. Practically the same result would be reached by a pipe-line of 400 cu. ft. at 610 lb. pressure, or 250 cu. ft. at 680 lb. pressure.

2443. In actual practice, for the sake of economy, the air-compressor may be regulated so as to charge the pipe-line to a lower pressure, whenever it may be desired to run the mine at less than its full output. The compressor can be made automatic, and may be set for any required maximum pressure, and to retard its speed as this limit is approached. Relief-valves should be used for both the pipe-line and for the locomotive, as a protection against over-charging. In some cases, where the pipe-line extends beyond the charging-station quite a distance, a less pipe-line pressure may be used; and after the locomotive has been connected with the pipe-line, and the pressure has been equalized, that part of the pipe-line beyond the charging-station may be shut off by a valve, and the locomotive may continue, connected by the remaining part of the pipe-line to the compressor, until the required pressure is reached, when the locomotive can be disconnected and the valve opened. There is no difficulty in obtaining and laying pipe strong enough to stand 500 to 1,000 lb. pressure to the square inch, and this form of reservoir costs very nearly the same as equivalent storage in tanks. Four to six inches diameter is usually the best size for pipe-line. Air may be conveyed several miles through a pipe of as small diameter as two inches with scarcely appreciable loss of pressure. For a pressure of 500 to 600 lb. or more, a three-stage compressor is generally preferred. If a low-pressure compressed-air system is also used for operating mine machinery, such as drills, pumps, hoists, etc., it is often economical to supply the locomotive with air from the low-pressure system, at, say, 60 to 100 lb. pressure; in this case, a special auxiliary two-stage compressor is used.

For extra light work, short trips, and easy grades, a pressure of 80 to 100 lb. may be sufficient for the locomotive.

2444. Air-compressors are now so constructed that they may be used during the daytime to furnish high-pressure air from 400 to 800 lb. for operating the locomotives, and during the night to furnish air at low pressure—60 to 100 lb.—for operating drills, etc. This arrangement is convenient for night-work, whether it consists in driving entries or in getting mine faces ready for the miners.

2445. As stated before, the mechanical construction and practical operation of the compressed-air locomotive is similar to that of the steam locomotive. Air-tanks take the place of the boiler, and the air is applied and used in much the same manner as steam; the details, however, are modified to secure the most economical and convenient use of the air. The main air-tanks should be made of a special quality of heavy steel plates, with heavy butt-riveted welt-strip horizontal seams, and with both heads flanged convex. The front head should be provided with a manhole. The usual range of charging pressure for compressed-air locomotives is 500 to 800 lb., although heavier pressure can be used in case of long hauls and heavy work, with but one charge of air.

2446. Experience has shown, in well-constructed air pipe-lines, that slight changes in temperature cause greater

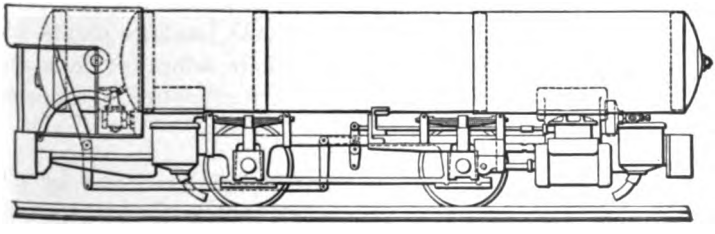

FIG. 887.

variations in pressure than are produced by leakage. A properly constructed pipe-line, with heavy connections, carefully fitted, and supplied with special valves, will lose very little, if any, through leakage. While the first cost of a

compressed-air haulage plant is greater than that of a steam locomotive, the cost of maintenance is less; the cost of operating, however, exclusive of repairs, is slightly more when but one locomotive is used. When several compressed-air locomotives are used, the difference in cost of mere operation becomes less, until it reaches a point at which it is really cheaper than the operation of the same number of steam locomotives. Figure 887 is a side view of a modern compressed-air mine locomotive.

2447. Electric mine locomotives consist essentially of a heavy truck, the wheels of which are rotated by a mechanism operated by an electric motor. The operation of the electric mine locomotive is very similar to that of an electric trolley-car; in fact, the power to run the locomotive is conveyed along the haulage-road through a conducting wire on which a trolley connected with the locomotive runs.

2448. The electric locomotive possesses one great advantage over the steam locomotive: there is no exhaust to vitiate the air of the mine. It is, therefore, an excellent haulage-machine for use in mines free from explosive gas. Its use requires the erection of a plant for generating electricity on the surface. The power thus generated is very convenient, and the current carried along the conducting wires can be utilized for many purposes in mines. For instance, coal-cutters, pumps, drilling-machines, hoists, etc., etc., can be operated by it. This gives electric haulage plants advantages which have resulted in their adoption in many mines. Actual results prove them very efficient and economical in operation.

2449. Gasoline mining locomotives have not as yet been used, although the successful utilization of gasoline-engines for other purposes makes it evident that one manufacturer's claim of his ability to produce a gasoline locomotive is well founded. Such a locomotive, however, will be open to one of the objections for mine use that applies to a steam locomotive, viz., the vitiation of the mine air by the

products of the combustion of the gasoline vapor in the cylinders, which must pass out through the exhaust.

2450. All the types of mine locomotives mentioned require for successful operation that the grades of the roads over which they run be comparatively light; in this respect, they are less advantageous than rope haulage. Again, as stated before, with mine locomotives the haulage is performed in a more intermittent manner than by rope haulage, more especially than by the endless-rope system. In the construction of mine-tracks for locomotive haulage, the same general rules apply as in the construction of tracks for rope haulage, the only difference being that, when locomotives of any type are used, the outer rail of all curves should be slightly elevated. The same rule regarding the size of curves applies in the case of locomotive haulage as in rope haulage, namely, that they should be of as large radius as possible, though it must be said that well-designed mine locomotives with a short wheel-base will run and pull trips around sharp curves better than any type of rope haulage.

HOISTING AND HOISTING APPLIANCES.

MOTORS.

INTRODUCTION.

2451. In order that we may study hoisting machinery to the best advantage, we will divide it into its component parts and consider these separately. They are as follows:

Motors,	**Cars,**
Drums,	**Rope Carriers,**
Ropes,	**Tracks.**

In other words, a hoisting plant, generally speaking, consists, first, of a *motor* to supply power and to rotate a drum; second, of a *drum* to be driven by the motor and to wind upon itself a rope; third, of a *rope* to be wound upon the drum and to carry at its end a car; fourth, of a *car* to be carried by the rope and to contain the material to be hoisted; fifth, of *rope carriers* to guide and control the rope; and, sixth, of a *track* to guide and control the car during its travel.

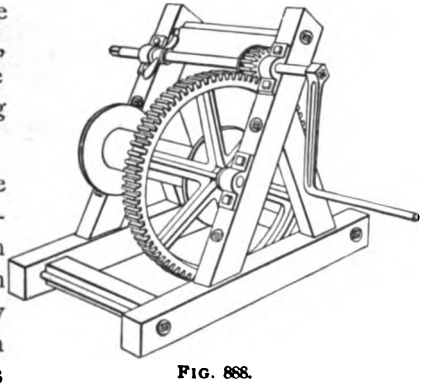

FIG. 888.

2452. As we have said, the motor of a hoisting plant is that part which supplies the power. In the case of an ordinary **windlass,** as shown in Fig. 888, the motor is a man, who turns the crank-handles, and thus applies power

For notice of the copyright, see page immediately following the title page.

to the drum. In the case of a horse-gin, as shown in Fig. 889, the motor is a horse, which is hitched to the end of the horizontal lever, and, by walking around the gin, supplies power to the drum. These motors answer their purposes, but they are only capable of exerting small amounts of power; as it becomes necessary to hoist heavy loads from great depths, more powerful motors must be employed. In Fig. 890 is shown an electric motor, or dynamo, arranged as a motor for a hoist; in Fig. 891 is shown a duplex or double-cylinder

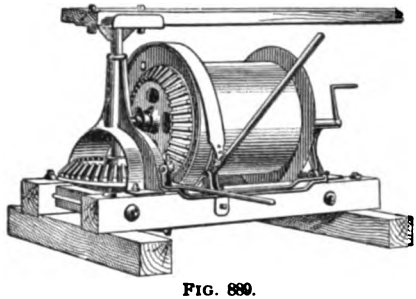

FIG. 889.

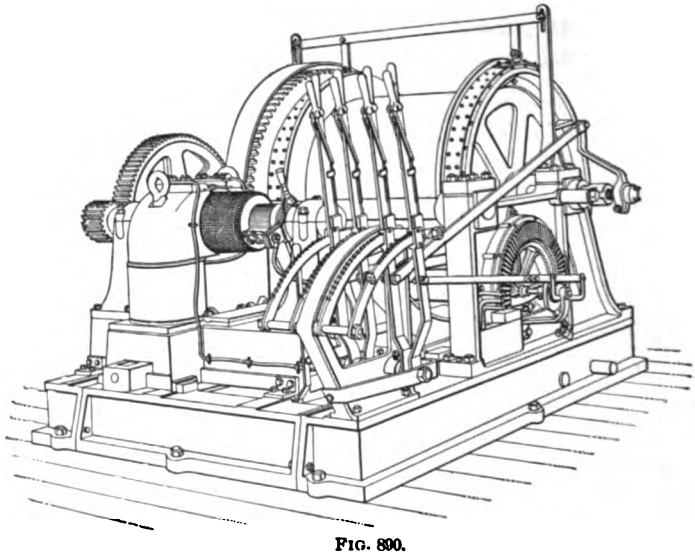

FIG. 890.

engine similarly arranged. We have before us, then, two powerful motors applicable to a hoisting plant; namely, electric motors and engines. In actual practice, these are found to fill all requirements, and, under certain conditions, each has advantages over the other.

It would be well to note here that there is a fundamental difference between the first two motors cited and the last two. The first two—that is, the man and the horse—actually supply the power that is transmitted to the drum. The last two—that is, the dynamo and the engine—do not actually supply the power, but simply transform it. The electric motor is supplied with electrical energy from some other source and transforms it into mechanical power, which is then transmitted to the drum. The engine is supplied with energy in the form of steam or compressed air, and

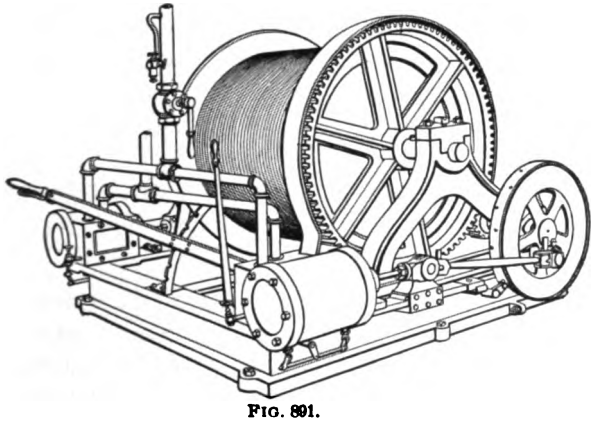

FIG. 891.

transforms it into mechanical power. As far as the hoisting plant is concerned, however, these motors, the electric motor and the engine, do supply the power.

ELECTRIC MOTORS, OR DYNAMOS.

2453. Of late years electricity has found its way into almost every branch of engineering, and mining engineering is not an exception to the rule. We find it taking the place of steam and compressed air in driving drills and mining machines, locomotives for underground haulage, pumps, and hoisting-engines. For the latter purpose it is well adapted and, under certain conditions, has many advantages. Some of these are due simply to the use of an electric motor in place of an engine; others are due to the use

of electricity instead of steam; and still others are due to the system of electrical transmission and transformation itself.

2454. By using an electric motor for a hoist a rotary motion is obtained directly, and can be reduced and transmitted to the winding drum simply through spur-gearing; whereas an engine gives a reciprocating motion that must be transmitted to the drum by means of cross-heads, connecting-rods, and cranks. The reason why the motion of an electric motor must be reduced, in transmitting it to the drum, is because the speed is necessarily too high for the drum. An electric motor is a less complicated piece of mechanism than an engine, and it consequently requires less attendance and less repairs. It has no valve-gear to get out of order, and it is more compact and occupies less room than an engine of the same power. The speed and power of an electric motor are regulated by means of a controller as readily as the speed and power of an engine are regulated by the throttle.

2455. By using electricity instead of steam the necessity of steam-pipes is avoided, their place being taken by two wires. These are much more easily laid and carried than steam-pipes. They take up little or no room, and can be carried along the most tortuous passageways when the power is wanted underground. There is no heat from them as there is from steam-pipes, and the loss due to the resistance of the wire to the current, known as *line loss*, is very small compared with the loss due to the condensation of steam in the pipes. If the hoist is to be underground, there is no exhaust-steam to heat and vitiate the air and rot the timbers.

If the power has to be transmitted any considerable distance, or if it must be transformed from some natural source, as wind or water power, the advantages of the electrical system of transmission and transformation are very great. Suppose, for instance, that we have a well-equipped mining plant consisting of boilers and engines, with power to spare, and it is desired to sink a shaft at some remote

place on the surface or at some underground point. We have simply to connect a dynamo to one of the engines to transform some of the spare power into electrical energy, run wires to where the hoisting must be done, and use an electric hoist. Or, suppose a water-power is available, either close at hand or at some distance from where the hoisting is to be done. We would then use a water-wheel or turbine and a dynamo instead of boilers and engines, and transmit and use the electrical energy as before. By such an arrangement, we would save the cost of fuel and the handling of it and the ashes.

2456. From the foregoing, it is evident that the student of hoisting machinery should know something of electrical matters, and be as familiar with the fundamental laws of electricity as he is with those of steam, and as familiar with the characteristic points of a dynamo as he is with those of an engine.

2457. There are two kinds of dynamos: viz., *direct-current* dynamos and *alternating-current* dynamos.

Alternating-current dynamos are of two kinds, *single-phase* and *multiphase*. In speaking of dynamos specifically, the one that transforms mechanical energy into electrical energy is called the generator, and the one that transforms the electrical energy back into mechanical energy is called the motor.

2458. Direct-current dynamos are suitable for hoisting machinery provided the hoist is near the generating station or plant; but if the current must be carried a long distance, the system becomes impracticable because of the necessarily low voltage of the current and the consequent great cost of the conducting wires. Direct-current dynamos, suitable for power purposes, can not be made to operate successfully at a much higher electromotive force than 1,000 volts, on account of the *arcing* and *short-circuiting* of the commutator and its connections. Furthermore, the direct current can not be transformed to a higher voltage except in a machine like a dynamo and having the same

objections. The plan of connecting up several dynamos in series, and so increasing the voltage, has been tried; but it is suitable only where power must be transmitted and used in large units. It would certainly be impracticable to connect up several generators in series to give a current of high enough voltage to be transmitted economically, and then use several motors in a similar series to drive a hoist.

2459. The single-phase alternating-current dynamo can without difficulty be made to generate and use a current of 3,000 to 4,000 volts, or even more if necessary, because the current is taken from and by two continuous rings without being rectified, thus avoiding the difficulties attending the commutators of the direct-current machine. By the principle of induction, an alternating current of moderate voltage can be transformed into a current of smaller amperage and higher voltage, for transmission, and can be re-transformed at the other end of the line to any voltage desired, the amperage varying inversely as the voltage. The energy remains the same, with the exception of a small loss in the transformation, amounting to about 2 per cent. As the coils of the transformer are stationary, and as there are no sliding contacts, any desired amount of insulation can be used, and almost any voltage that can be controlled on the line can be obtained. Many plants are in operation with currents of 10,000 to 12,000 volts, and some with currents as high as 50,000 volts.

The single-phase alternating current, however, consisting as it does of a simple alternating wave, is not suitable for hoisting machinery, because no satisfactory single-phase alternating motor has yet been devised that is self-starting under load and capable of speed regulation. If a motor built on the same lines as a single-phase generator is brought up to the proper speed by some external power, so that the alternating impulses will act in the right direction at the right instants, and if the current is then turned on and the load gradually applied, it will run satisfactorily at constant speed. Such a machine is called a synchronous motor, because it

runs synchronously, or in step, with the alternations of the current. Its speed can not be regulated, and if a sudden load causes it to slow down or lose step, it stops. It is inconvenient, and, in fact, impracticable, for service where frequent stops and starts are necessary, because starting it is such a tedious operation, and if it must start with the load on, it can not be used at all.

2460. The successful development of the multiphase system during the past few years has solved the problem, and has secured the advantages of both the direct and alternating currents. A multiphase generator has several windings, so placed as to generate several alternating currents differing in phase; that is, passing the zero and maximum points at different instants. Under the influence of these currents, which may be compared roughly to the cranks of a duplex or triplex engine without any dead-center, multiphase synchronous motors are self-starting under light load, while non-synchronous or induction motors will start under full load and are capable of speed regulation. The latter possess the good qualities of the direct-current motors, and the additional advantage of having no commutator. Furthermore, the multiphase alternating current, like the single-phase current, retains the indispensable quality, for long-distance transmission, of being transformable from low to high voltage for transmission, and from high to low voltage for use at its destination.

Most of the earlier dynamos used for hoisting were street-car motors geared to friction hoists. This type is very satisfactory for small or medium sized hoists, as the friction-gear is an assistance to the motor controller in smooth starting. For large hoists a positive-geared motor is more reliable; but it is desirable to interpose a friction-clutch or an equivalent device at some point between the armature and the drum as a safeguard against excessive strains on the gearing due to the inertia of the armature and the too sudden stopping of the drum with the brake.

2461. The choice of the best kind of motor depends to some extent on the size of the hoist, its location, and the

nature of the work. For an unbalanced hoist of moderate size, especially if placed underground and exposed to dirt and water, the iron-clad series-wound street-car type is well adapted, as it is strong, well protected, and designed to stand heavy work on intermittent service. In this motor, efficiency, low heating, and absolute freedom from sparking are, to some extent, sacrificed for compactness and lightness. For large hoists, which are generally located in comparatively clean, dry places, which are either double-acting and balanced or single-acting and overbalanced, so as to act continuously, and in which high efficiency is of considerable importance, the stationary type of motor is usually preferable.

2462. The speed controller is one of the most important features of an electric hoist. On many of the earlier hoists, the commutated field, thrown into various combinations of different resistances by a cylinder switch, was employed, this form of control being at that time widely used in street-car service. This controller gave quite satisfactory results when assisted by friction-gearing, but with positive gearing it would not give a sufficiently gradual start. On most hoists, a variable resistance in armature circuit is employed; and by making this resistance sufficiently high, a perfectly smooth start may be obtained, even with a slack rope. The most satisfactory rheostatic controller, especially for heavy work, is one in which the resistance is cut in and out by a cylindrical switch with a magnetic blow-out, which avoids the troublesome effect of arcing at contacts, when the current is broken. In some cases it is practicable to use a double-motor equipment, with series-parallel controller, such as is now employed almost exclusively in street-car work.

ENGINES.

TYPES OF HOISTING-ENGINES.

2463. The engines of a hoisting plant are operated according to two methods. They are either continuous or intermittent in their action; that is, they either run continuously, empty or under some other load, and have the

work of hoisting put upon them by means of a clutch, or they are connected to the drum, either direct or through gearing, and are run only when making a hoist. The first of these methods has been employed extensively in regions where fuel is expensive, and where it is, therefore, desirable to obtain power economically by concentrating it. If a mine is equipped with an air-compressor for compressing air for rock-drills, or an underground hoist, or both, with a fan for ventilation, and has several openings where hoisting is to be done, one high-duty engine can be used to operate them all, and greater economy of fuel be obtained than if smaller and separate engines were used for each operation. The fan and the air-compressor would give a steady load, and the work of hoisting would be added to this as the hoists were made. But this kind of engine does not come naturally into our present studies, because it is an engine pure and simple, and is not affected by any of the requirements of the hoisting service. The clutches that are used for driving the drums will be taken up later in connection with drums.

The second method of using an engine in a hoisting plant —that is, of having it connected to the drum either direct or through gearing, and running it only when making a hoist—is the method generally adopted and the one we shall study, because it requires a hoisting-engine.

A hoisting-engine should be a *duplex engine;* it may be *condensing or non-condensing;* its size should bear an intimate relation to the amount and kind of work to be done; it may be driven by *steam* or compressed *air;* it should have a suitable, quick-acting *throttle-valve*, and the cylinders should be supplied with *relief-valves.*

2464. Duplex Engines.—One of the essentials of a good hoisting-engine is that it shall be capable of picking up the maximum load at any point in the hoist. If the engine is a single-cylinder engine, there will be two points in its revolution, the front and back dead-centers, at which it will be entirely powerless; and near to these points it will be capable of exerting only a very small amount of power.

If, with this sort of engine, the cage is at the bottom of the hoist, or, in fact, anywhere throughout the hoist where it might be necessary to stop, and the engine is on or near one of its dead-centers, it will be impossible to start to hoist. To avoid this state of affairs, two engines are placed side by side, acting on the same shaft, either engine being large enough to pick up the maximum load by itself. Such a combination of two single-cylinder engines is called a *duplex engine*. A cross-compound engine with its cranks set at right angles to each other will evidently produce the same effect in starting a load as a duplex engine; that is, there will be no dead-center. The two cylinders, each having its own piston and piston-rod, should have separate connecting-rods and cranks, and the cranks should take hold of the same shaft at right angles to each other. By this arrangement, it will readily be seen there is no dead-center or point where the engine is powerless. When one crank is on a center, the other is in its most effective position.

2465. Condensing or Non-Condensing Engines.— Steam-engines for hoisting service may be built either condensing or non-condensing; which is the better depends upon the circumstances of each case. Condensing engines are larger and cost more to build than non-condensing engines of the same power, and the only gain is in the greater economy of fuel of the condensing engines. If, therefore, the hoisting plant under consideration is to be located at a coal mine or in a coal region, where fuel is cheap, it would not be advisable, generally speaking, to go to the expense of putting in condensing engines. On the other hand, if the plant is to be located at a metal mine, where fuel is scarce, the economy of the condensing engine may more than balance its greater expense. It must be borne in mind, however, when deciding between the two, that hoisting is not an operation in which much economy can be gained by condensing, because the power required is so variable and intermittent. Condensing engines, too, are more complicated than non-condensing engines, and this is

always an objection. One of the essentials of a good hoisting-engine is that it shall be capable of exerting its maximum power at any time. In the case of a condensing engine, this demands two things. One is that provision must be made to admit live steam into the low-pressure cylinder, and the other is that the condenser and air-pump must be independent. We have assumed here that any condensing engine which we may consider must be a cross-compound; in the first place, because in a condensing engine the range of temperature of the steam is so great that with a single cylinder the initial condensation would be very large, and, in the second place, because, as we have seen, a hoisting-engine should be a double-cylinder engine in order that it may be able to start the load at any position of the hoist. This last reason was explained above, but the first reason will be considered more fully here.

2466. Suppose, for instance, an engine is supplied with steam at 100 pounds gauge pressure, which is equivalent to about 115 pounds absolute pressure. The temperature of such steam is 338° F. Let us admit this steam to the cylinder during a portion of the stroke, and cut it off at such a point that it will expand down to 50 pounds absolute pressure by the time the piston has reached the end of its stroke and the exhaust-valve opens. The temperature of steam at 50 pounds absolute pressure is 281° F., and the cylinder itself, or its inside walls, is at about the same temperature. Now, the exhaust-valve opens and most of the steam rushes out, leaving, say, 3 pounds back-pressure above the atmosphere due to the resistance offered by the valve opening and port. This 3 pounds is equal to 18 pounds absolute pressure, the temperature being 222° F. The temperature of the cylinder walls would, therefore, drop again, and would approach this temperature, 222° F. There would not be time enough for it to come clear down before steam is admitted on the other side of the piston for the return stroke, but we may use this illustration for our present purpose.

We have now the range of temperature before spoken of; that is, from 338° to 222°, or 116°, and it will be readily seen that this represents the possible fall of temperature of the cylinder during a stroke. But, now, more steam is admitted to the cylinder on the other side of the piston, and this is of the highest temperature; that is, 338°. The result is that some of it is condensed by coming in contact with the cylinder walls, which have cooled down, as we have shown. This is called *initial condensation;* it is a loss of power, and is, therefore, very objectionable.

2467. Let us now take the same conditions, but run our engine as a condensing engine, and see what the result will be. The steam enters the cylinder, as before, at a temperature of 338°. It is cut off somewhat earlier, if we wish to obtain the same power from the engine, and expands to the end of the stroke. Here the exhaust-valve opens, not to the atmosphere, but to the condenser, and the steam rushes out and is condensed, forming a partial vacuum. This vacuum may be equal to 26 inches of mercury, which is equivalent to 2 pounds absolute back-pressure, whereas before we had 18 pounds. The temperature of 2 pounds absolute pressure is 126° F., and our range of temperature becomes $338° - 126° = 212°$, as compared with the 116° of the first case. We should, therefore, have greater condensation of the steam when it is admitted for the next stroke. To prevent this, then, cross-compound engines are used. The steam is expanded partly in one cylinder, then transferred to the other, where it is expanded further, and is exhausted to the condenser. This obviates the necessity of admitting steam at a temperature of 338° F. into a cylinder which has just contained steam at a temperature of 126° F.

We assume, therefore, that our condensing engine is to be a cross-compound engine, and, as we have said, the hoisting-service requires two things of it: First, that it shall take live steam into the low-pressure cylinder when necessary, and, second, that its condenser and air-pump be of the independent type.

2468. A hoisting-engine which is to be condensing must take live steam into its low-pressure cylinder for the following reason: In the regular running of a cross-compound condensing engine, the steam is admitted from the boiler into the first or high-pressure cylinder. Here it is allowed to expand a certain amount, after which it is exhausted into a receiver. From the receiver it is admitted to the low-pressure cylinder, where it expands still further, and from there it is exhausted into the condenser. In other words, the low-pressure cylinder is fed from the high-pressure cylinder. Now, hoisting is not regular running; starting and stopping make up a large part of it. As has been pointed out, an engine capable of starting under load at any point must have no dead-center, but must have two cylinders, either of which is able to pick up the load when the other is on its center. But we have just seen that the low-pressure cylinder of a compound condensing engine is fed from the high-pressure cylinder; so, if the engine has been standing and no steam has been in the high-pressure cylinder, there will be none for the low-pressure, unless other provision be made for it. Also, the low-pressure cylinder may be the one required to pick up the load in starting. Therefore, to give it power at such a time, live steam is admitted to it independently of the high-pressure cylinder. This is simply done by having an *auxiliary steam-pipe* and *throttle-valve* leading directly to it, and arranged so that the engineer can open and shut it at pleasure. The steam used is generally reduced in pressure from that carried in the boiler by a *regulator*, because the high-pressure steam would give too much power, the low-pressure cylinder being of large diameter, so that it can do its part of the work with the partially expanded steam from the high-pressure cylinder.

2469. A hoisting-engine to run condensing should also have an *independent air-pump and condenser*. The air-pump of an ordinary condensing engine is operated by the engine itself and is practically part of it. If this plan is adopted in the case of a hoisting-engine, when the engine stops at

the end of a hoist the air-pump will stop, and the vacuum which it keeps up will be lost while the engine is standing. That is to say, atmospheric pressure will find its way into the condenser and act as a back-pressure against the low-pressure piston, amounting to about 15 lb. per square inch. This will, in most cases, render the low-pressure piston unable to pick up the load at the beginning of the next hoist. Independent condensers and air-pumps can be bought ready-made to suit any engine. They are simply special steam-driven pumps.

SIZE OF ENGINE.

2470. By the size of an engine is meant the diameter of its cylinder (or cylinders) and the length of its stroke. We should be able to say what these dimensions should be for a given case. They, of course, depend upon the work to be done, and this work consists, in the case of a hoisting-engine, of three things; namely, lifting the load, accelerating the moving parts, and overcoming the friction. How accurately these three items should be considered depends upon the circumstances of each case, but it is not generally advisable to figure too close. In fact, it is always advisable to have an excess of power in the engine. A little extra power costs very little if put into the engine while building, but it may be very difficult and costly to obtain it at some later day. Furthermore, the conditions are so variable that no rule can be laid down that will be applicable in all cases. It is, therefore, thought advisable to show the student how to work out a calculation approximately and to illustrate it with examples.

2471. Suppose that we wish to build a winding-engine for a shaft or vertical hoistway, the depth of which is 1,500 ft. The weight of material to be hoisted at each trip is 4,000 lb.; the weight of the mine-car to be used is 2,000 lb.; the weight of the cage is 3,000 lb. The shaft is to be double, with two cages balancing each other, and a tail or balance rope is to be used. The engine is to be of the duplex

type, direct-acting, and the mean effective pressure is to be 45 lb. per square inch.

The load on the rope is as follows:

Weight of material	4,000 lb.
Weight of mine-car	2,000 lb.
Weight of cage	3,000 lb.
Weight of rope, say	4,000 lb.
Total	13,000 lb.

The weight of the rope here used is assumed in order to get at the probable total weight on it. We will use a plow-steel wire rope, and a factor of safety of 10. The breaking strength of the rope should then be 13,000 lb. × 10, or 130,000 lb. By referring to Table 46, we find that a plow-steel wire rope having 19 wires to the strand, with a breaking strength of 130,000 lb., or 65 tons, slightly exceeds $1\frac{1}{8}$ in. diameter; but, as we have used a large factor of safety, the $1\frac{1}{8}$-in. rope, with a breaking strength of 60 tons, will be strong enough. This rope weighs 2 lb. per foot of length, or 2 lb. × 1,500 = 3,000 lb. Revising our figures above by using this corrected weight of rope, we have

Weight of material	4,000 lb.
Weight of mine-car	2,000 lb.
Weight of cage	3,000 lb.
Weight of rope	3,000 lb.
Total	12,000 lb.

The total load on the rope is, therefore, actually 6 tons, which, divided into 60 tons, the breaking strength of the rope, gives us a factor of safety of 10, as first assumed.

The diameter of the drum on which a rope containing 19 wires to the strand is to be wound should not be less than 60 times the diameter of the rope. Therefore, the minimum size of drum to be used with a $1\frac{1}{8}$-in. plow-steel rope is $5\frac{5}{8}$ ft. in diameter. Suppose, however, that we are not limited as to space; we will use a drum 8 ft. in diameter, because it is easier on the rope, and for a given hoist a larger drum need not be so long; consequently, the engines will not have to be spread so far apart, and the fleeting of the rope will not be so great.

We are now ready to calculate the work to be done. From the conditions laid down in the beginning, we note that the weight of the rope is balanced by the use of a tail-rope; that the two cages and the two cars balance each other, and that we have only the weight of the material, 4,000 pounds, as a net load, or, in other words, an unbalanced load.

To this we will add, for accelerating the moving parts and overcoming the friction, 10% of the gross load to get the actual load. By the gross load we mean all of the moving parts; that is:

1 lot of material	4,000 lb.
2 mine-cars	4,000 lb.
2 cages	6,000 lb.
2 ropes	6,000 lb.
Total	20,000 lb.

2472. We take the gross load for this purpose, because it is more nearly proportional to the friction and the inertia than the net load is. For instance, suppose in one case, which we will call Case A, we have conditions as laid down in our example; that is, a double shaft with two cages and two cars balancing each other, and hoisting 4,000 lb. of material at a hoist, with a tail-rope to balance the main rope. The gross load would be 20,000 lb. as above, and the net load would be 4,000 lb. Then, suppose in another case, which we will call Case B, we have the same conditions, except that no tail-rope is to be used. The gross load for this case would be:

1 lot of material	4,000 lb.
2 mine-cars	4,000 lb.
2 cages	6,000 lb.
1 rope	3,000 lb.
Total	17,000 lb.

And the net load would be:

1 lot of material	**4,000 lb.**
1 rope	**3,000 lb.**
Total	**7,000 lb.**

Now, it is quite evident that there will be less friction and inertia to overcome in Case B than in Case A, because the mass to be handled is less by the amount of one rope. We have just seen that the gross load of Case B is less than that of Case A by this same amount; therefore, the gross load, the friction, and the inertia are proportional. The net load of Case B, on the other hand, is greater than that of Case A, so it is not proportional to the friction and inertia.

Let us suppose still another case, which we will call Case C, in which we have the same weight of rope, cage, car, and material to be hoisted, but at a single shaft, where there is room for only one cage and car. We will not have, in this case, any balancing of the cage, car, or rope, and our gross load becomes:

1 lot of material	4,000 lb.
1 mine-car	2,000 lb.
1 cage	3,000 lb.
1 rope	3,000 lb.
Total	12,000 lb.

And our net load is the same. The mass to be handled in this case is less than that in Case A by the amount of one rope, one cage, and one car; that is, the two amounts are to each other as 20 is to 12, and it will be seen, on reflection, that the friction and inertia must also be to each other as 20 is to 12, for Cases A and C. Now the net load in Case C is 12,000 pounds, or three times as much as that in Case A, so that if we proportioned our work for overcoming the friction and accelerating the moving parts according to the net load, we would have three times as much for Case C as for Case A, while the mass to be moved is only twelve-twentieths as much.

2473. This method of calculating the work necessary to overcome the friction and to accelerate the moving parts is, in most cases, entirely satisfactory, although sometimes a larger percentage is used if the work is to be of a rough character, giving greater friction, or if great speed of

hoisting is to be required, thereby calling for a greater accelerating force. The amount of friction is at best a matter of judgment and not of calculation.

To calculate the work of acceleration, so much must be assumed that it is generally as satisfactory to assume the work directly. Furthermore, as we have seen, it is necessary to figure on one cylinder to do the total work, because the second one is at times powerless, and this gives us some extra power when both cylinders are acting.

As has been said, 10% of the gross load will be added to the net load to cover the work of overcoming the friction and accelerating the moving parts.

Rule.—*To find the actual load on the engines, add to the net load 10% of the gross load.*

The actual load for the original case will then be 4,000 pounds plus 10% of 20,000 pounds; that is, 6,000 pounds.

2474. The diameter of the drum is 8 feet, and to this must be added the diameter of the rope, $1\frac{1}{8}$ inches, to give the working diameter, which is, therefore, 8.094 feet, nearly.

The working circumference is, then, $8.094 \times 3.1416 = 25.43$ ft., nearly. For every revolution of the drum, we require $25.43 \times 6{,}000 = 152{,}580$ ft.-lb. of work from the engine.

Rule.—*To find the work required of the engines per revolution of the drum, multiply the actual load in pounds by the working circumference of the drum in feet.*

2475. The original proposition calls for a duplex direct-acting engine. This makes the revolutions of the engine and drum equal. Furthermore, we must count on only one engine to do the work.

The work performed in the cylinder of an engine per revolution may be calculated as in Art. **2067**, *Steam-Engines*. The force is the mean effective pressure P multiplied by the area A of cylinder in square inches. The distance moved by the piston per revolution is $2L$ inches, or $\frac{2L}{12}$ feet, where

L denotes the length of stroke in inches. Using the symbols of the article just referred to and letting w represent the work per revolution, we have

$$w = \frac{2\,P\,L\,A}{12} = \frac{P\,L\,A}{6}.$$

For the present purpose, the formula must be modified, because we do not wish to calculate the work that an engine can do, but wish to calculate the size of an engine that can do the work required at the drum. The formula may be changed to read thus:

$$A\,L = \frac{6\,w}{P}.$$

That is, *the area of the piston multiplied by the stroke in inches is equal to six times the work divided by the mean effective pressure.* The area of the piston is equal to .7854 times the square of the diameter, or $A = .7854\,D^2$ where D is the diameter. Let the stroke be r times the diameter; that is, $L = r\,D$. If we now put these values of A and L in the formula, it becomes

$$.7854\,D^2 \times r\,D = \frac{6\,w}{P},$$

or

$$.7854\,r\,D^3 = \frac{6\,w}{P}.$$

This formula can be changed so as to read

$$D = 1.97\sqrt[3]{\frac{w}{P\,r}}. \qquad \textbf{(211.)}$$

EXAMPLE.—What should be the size of the cylinders of a hoisting-engine which is to perform 152,580 ft.-lb. of work per revolution, if the mean effective pressure is 45 pounds per square inch and the stroke of the piston is twice its diameter?

SOLUTION.—In this case $r = 2$, since, if the stroke is twice the diameter, $r = \frac{2\,d}{d} = 2$.

Applying formula **211**,

$$D = 1.97\sqrt[3]{\frac{w}{P\,r}} = 1.97\sqrt[3]{\frac{152{,}580}{45 \times 2}} = 23.5 \text{ in.}$$

The engine should, therefore, be a duplex engine with cylinders 23½ in. in diameter and $23\frac{1}{2} \times 2 = 47$ in. stroke. Ans.

An engine of this size will do the hoisting at a vertical shaft 1,500 ft. deep, where the weight of material to be hoisted at a trip is 4,000 lb.; the weight of the mine-car to be used is 2,000 lb., and the weight of the cage is 3,000 lb.; two cages and a tail-rope being used, and the mean effective pressure being 45 lb. per sq. in.

2476. Before applying the formula to another example, the correctness of the above cylinder sizes may be tested in the following manner: Under the head of Duplex Engines, it was seen that when one piston is at the end of its stroke, and its crank is, therefore, on a dead-center, the other piston may be called upon to lift the maximum load. In such a case, this other piston is at about mid-stroke and its crank is at right angles to the connecting-rod, or in its most effective position. Now, the ability of an engine to rotate a drum is measured by the turning moment that it can exert, and the engine in the above position can exert a turning moment as follows:

The area of the piston is $23.5^2 \times .7854 = 433.7$ sq. in., which, multiplied by the mean effective pressure, 45 lb. per sq. in., gives 19,516.5 lb. as the total pressure exerted by the piston. This pressure is transmitted through the connecting-rod to the crank-pin, and acts on the latter at right angles to the crank. The length of the crank is half the length of the stroke, that is, $23\frac{1}{2}$ inches, and this, multiplied by the acting pressure given above, is the turning moment in inch-pounds that the engine will exert when at one of its dead-centers. This turning moment is, therefore,

$$19{,}516.5 \times 23\tfrac{1}{2} = 458{,}638 \text{ in.-lb.}$$

The resistance that this turning moment must overcome is the opposing turning moment due to the actual load on the drum. In the foregoing example this actual load is 6,000 lb. The working diameter of the drum is 8.09 ft., nearly; its radius is 4.05 ft., nearly, or 48.6 in., and the resulting turning moment is 48.6 in. $\times$ 6,000 lb. = 291,600 in.-lb.

It will be seen that this moment is considerably smaller

than that which the engine exerts, so the cylinder is of ample size to start the load.

2477. Consider now another example, similar to the foregoing, but differing from it in some of its conditions. Suppose, for instance, that the only difference in the two cases is that a tail-rope can not be used in the present case. The load on the rope will be the same as before, and we will, therefore, use a 1⅛-in. plow-steel rope, which gives us a factor of safety of 10. Of course, the load on the rope will not be uniform, and it is the maximum load that has been taken; but, then, it is the maximum load that must be counted on. Naturally, also, the same diameter of drum will be used, namely, 8 feet.

Now, the conditions are that the shaft is double, and consequently, as before, the two cages and the two cars balance each other; but the net load is the weight of the material, 4,000 lb., and that of the rope, 3,000 lb., or a total of 7,000 lb. To this is added, as before, for accelerating the moving parts and overcoming the friction, 10% of the gross load, which is in this case

1 lot of material	4,000 lb.
2 mine-cars	4,000 lb.
2 cages	6,000 lb.
1 rope	3,000 lb.
Total	17,000 lb.

Ten per cent. of this is 1,700 lb., and the actual load to be calculated for is 7,000 lb. + 1,700 lb., or 8,700 lb.

The working circumference of the drum is, as before, 25.43 ft., and for every revolution is required 8,700 × 25.43 = 221,241 ft.-lb. of work from one engine. We will use the same style of engine, that is, a duplex engine and direct-acting; so this is the amount of power that is necessary per revolution of one engine. Then, if the same proportion of cylinders is adopted, formula **211** gives

$$D = 1.97\sqrt[3]{\frac{221,241}{45 \times 2}} = 26.59 \text{ in., say } 26\tfrac{1}{2} \text{ in.}$$

Stroke = 26.5 × 2 = 53 in.

That is to say, the engine should have cylinders 26½ inches in diameter, with a 53-inch stroke.

It will be observed that this engine is considerably larger than the first ones, yet it does only the same amount of useful work. It hoists the same weight of material, 4,000 lb. at each hoist, but it also lifts the entire weight of the rope at starting when the loaded car is at the bottom of the shaft. The work of lifting the rope is so much energy thrown away. This loss is offset in some degree by the wear and tear of a tail-rope.

2478. Let us carry this subject one step further and see what size of engine we would require if it were necessary to hoist the same material from a single shaft, that is, the same amount at one hoist. The load on the rope would be the same as it was in the first case:

Weight of material	4,000 lb.
Weight of mine-car	2,000 lb.
Weight of cage	3,000 lb.
Weight of rope	3,000 lb.
Total	12,000 lb.

We shall, therefore, use the same rope, a 1⅛-inch plow-steel rope, and the same drum, 8 ft. in diameter. As the shaft is single, there is only one cage and one car, so these are not balanced, and the net load becomes the same as the above load on the rope, that is, the same as the gross load, 12,000 lb. Increasing this by 10% to cover the work of acceleration and overcoming the friction, we have 13,200 lb. for the actual load. Multiplying this by 25.43 feet, the working circumference of the drum, gives 335,676 ft.-lb. of work to be done per revolution.

Using formula **211**,

$$D = 1.97 \sqrt[3]{\frac{335,676}{45 \times 2}} = 30.55 \text{ in., say } 30\tfrac{1}{2} \text{ in.}$$

$$\text{Stroke} = 30.5 \times 2 = 61 \text{ in.}$$

In other words, the engine must have cylinders 30½ inches in diameter, with 61-inch stroke.

A study of the preceding examples is instructive. An engine with 30½-inch by 61-inch cylinders hoists only the same weight of material as the first engine did, with 23½-inch by 47-inch cylinders. Furthermore, it can make only half as many hoists in a given time as the first engine can, because it loses all the time during which it is sending the cage down for another load, whereas in the first and second cases a hoist is made during that time. In this third case, the work necessary to lift the rope, cage, and car is all useless work, and is so much thrown away. These are certainly great disadvantages, but there are some advantages belonging to this last system. There is only one drum, one rope, and one cage to supply and keep in repair, and the cost of sinking a single shaft is, of course, much less than that of sinking a double shaft.

In many mining operations there is great uncertainty as to the permanency of the mine, because so little is known about the hidden treasures that are sought. In such a case, it is often advisable to sink the smaller shaft and endure the extravagance of hoisting without a balance.

2479. Suppose that, instead of being direct-acting, the engine is on the second motion. It is evident that the size of the cylinders can be reduced, although the horsepower will remain the same, owing to the increase in the number of revolutions. Thus, if the ratio of the gear to the pinion is 3 : 1, that is, if it takes three revolutions of the pinion to turn the drum once, the engine will make 6 strokes per revolution of the drum instead of 2, as in the previous cases.

If we represent by r_1 the ratio of the gear to the pinion, in other words, if the diameter of the gear is r_1 times that of the pinion, formula **211** may be altered slightly to apply to second-motion engines. It then becomes

$$D = 1.97\sqrt[3]{\frac{w}{Prr_1}}. \qquad \textbf{(212.)}$$

Formula **212** may be expressed in words as follows:

The diameter of the cylinder of a second-motion engine is

equal to 1.97 times the cube root of the quotient obtained by dividing the work in foot-pounds per revolution of drum by the continued product of the M. E. P. in pounds per square inch, the ratio of the stroke to the diameter, and the ratio of the gear to the pinion.

EXAMPLE.—Suppose that the work to be done per revolution of drum is 152,580 ft.-lb., that the stroke is $1\frac{1}{2}$ times the diameter, and that the gear has $3\frac{1}{2}$ times as many teeth as the pinion; what should be the size of the cylinders, the M. E. P. being 45 lb. per sq. in.?

SOLUTION.—In this case $r = 1\frac{1}{2} = 1.75$, and $r_1 = 3\frac{1}{2} = 3.5$.

Applying formula **212**,

$$D = 1.97\sqrt[3]{\frac{152,580}{45 \times 1.75 \times 3.5}} = 16.18 \text{ in., say } 16 \text{ in. Ans.}$$

Then, $L = 16 \times 1\frac{1}{2} = 28$ in. Ans.

2480. Steam and Compressed-Air Engines.—So far, nothing has been said about the kind of power utilized by the engine. It may be either steam or compressed air. In most cases, where the engine is located on the surface, steam is preferable, because it can be obtained directly from the boiler without the intervention of an air-compressor and the consequent loss of total efficiency; but this is not always so. Consider the case of a mining plant which has compressors for supplying air for rock-drills, and where it becomes necessary to sink a shaft at a distance from the main works, and at a point where it would be very difficult to take fuel and water. Steam carried a long distance in pipes loses much by condensation; and, furthermore, compressed air must be carried to the new shaft for the rock-drills. It is quite evident, under such circumstances, that the engine should be supplied with compressed air instead of steam.

Again, it is often necessary to have a shaft or slope entirely underground; that is, to have the hoisting-engine and drum placed there, too. In such a location, steam would almost always be barred out on account of the heat and moisture that would be liberated with the exhaust. On the other hand, the exhausted air from an engine driven by compressed air would be cool and dry, and would supply fresh

air to the miners. Hoisting-engines may then be driven by steam or compressed air, and it would be well to know which is to be used when deciding upon the engine.

2481. Throttle-Valves.—The throttle-valve of a hoisting-engine, whether the engine is designed to be run by steam or compressed air, should be balanced, so that it can be easily opened or shut by hand; and it should be of the lever type, so that it can be opened or shut quickly. There should also be a supplementary valve close to the throttle and easy of access, which can be shut in case of any trouble with the throttle. This may be of the screw type, should be absolutely tight, and should be closed whenever the engines are to stand for a considerable length of time.

2482. Cylinder Relief-Valves.—In any steam-engine some of the steam that is admitted to the cylinder to do the work is condensed, partly by the absorption of its heat by the cylinder walls, and partly by the conversion of its heat into work. This produces water, which must always be taken care of. Let us for a moment follow out the operation of an engine. The piston is at one end of the cylinder. Steam is admitted behind it, and forces it along the cylinder to the other end, condensing somewhat during that time, and leaving the cylinder full of steam (at a lower pressure) and water. The return stroke now takes place, and this steam is let out through the exhaust-valve, while the water is pushed along the bottom of the cylinder, gradually increasing in depth as its area is decreased, until it reaches such a height that it can also get out through the exhaust-valve. It can not get out quickly enough, however, and towards the end of the stroke the exhaust-valve is closed, thus shutting in the water that is left. Now, if this amount is more than enough to fill the clearance space, that is, the space between the piston at the end of its stroke and the valve, trouble will follow, because the piston must go on to the end of its stroke, being controlled by the revolution of the crank and the inertia of all the moving parts of the

engine. As water is non-compressible, the result in such a case would probably be the blowing out of the cylinder head.

Now, with a hoisting-engine, where the running is intermittent, the cylinders have time to cool down considerably during the stoppages, and there is, consequently, much condensation at the beginning of each hoist. To take care of this water of condensation, therefore, all hoisting-engines should be provided with some sort of relief-valves. On small engines it has been found sufficient to have drip-cocks at the bottom of each end of each cylinder, so arranged that they can be opened and closed readily by the engineer; but with larger engines it has often been found necessary to have valves of larger area held shut by a spring, and arranged to be opened automatically by any excessive pressure in the cylinder.

2483. A very excellent device for this purpose is a combined *relief-valve*, such as is shown in Fig. 892, or some modification of it. The idea here is to have a small valve *A*

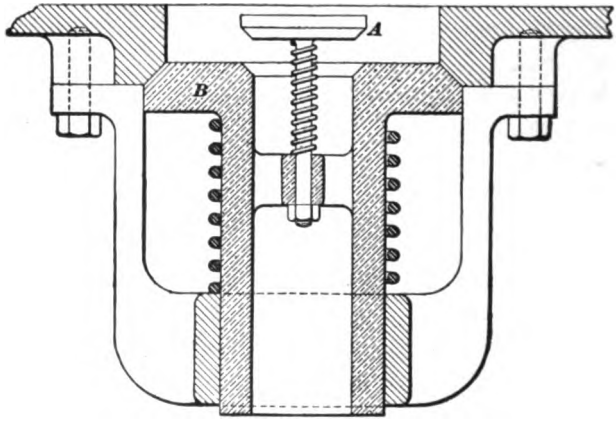

FIG. 892.

opening in towards the cylinder and held open by a spring, so that any water that is in the cylinder at the end of the hoist, or that would accumulate in the cylinder from leaky valves during a stoppage, can drain away. When the steam is admitted to the cylinder to make a hoist, it shuts this valve

and holds it shut by its pressure. Now, it will be noticed that this valve seats on another valve *B*, which opens out from the cylinder, but which is held shut by a heavy spring against any ordinary pressure in the cylinder. In case of any excessive pressure due to water in the cylinder, or other causes, this larger valve will be forced open, and thus relieve the pressure.

DRUMS.

2484. Having considered the motors available for a hoisting plant, the next subject requiring attention is that of the drums. These are of four kinds, which will be taken up separately. They are as follows: *Cylindrical Drums; Conical Drums; Reels; Rope Wheels.*

CYLINDRICAL DRUMS.

2485. **Cylindrical drums** probably form the largest class of drums in use. Fig. 888 shows a cylindrical drum of the simplest type. This is a plain iron cylinder with a flange at each end to prevent the rope from running off. It is designed for a hemp or manilla rope and for a short hoist. Its diameter is too small to allow an iron or steel rope to be wound upon it, and it has not the capacity to wind any considerable length of rope, although in a case like this it would be permissible to allow the rope to wind upon itself after once filling the drum. Fig. 889 shows a similar drum of larger diameter. Such a drum is also only applicable to a short hoist, although it would be large enough to wind the small sizes of iron and steel ropes. In Figs. 890 and 891 are shown two cylindrical drums, essentially alike, built for larger and heavier service. These are each of cast iron, and each has a spiral groove cast or turned in it for the rope to lie in as it is wound. In such cases, and, in fact, whenever metal ropes are used, it is not good practice to allow the rope to wind upon itself, because the different coils wear upon each other, although this is sometimes done. The drum should be built large enough to take the full length of the rope

required by the hoist, running over the drum only once. For example, suppose we are required to make a hoist of 1,000 feet and to lift a load which would require a 1¼-inch steel rope. The diameter of the smallest drum which it would be advisable to use is 1¼ in. × 60 = 6¼ ft., and the diameter at the center of the rope when wound upon the drum is 6 ft. 4¼ in. The corresponding circumference, or the length of one coil of rope, is nearly 20 ft. To wind 1,000 ft. would require 1,000 ÷ 20 = 50 turns on the drum. To this should be added at least one turn, say one and a half turns, at the end of the rope, to afford friction, so that all the strain will not come on the fastening; and about three turns should also be added for possible overwinding. This makes 54½ turns to be allowed for on the drum. If the drum is of iron with grooves turned in it, we must allow ¼ inch between adjacent parts of the rope, or 1½ inches from the center of one turn to the center of the next turn. This gives 54½ × 1½ inches = 81¾ inches, or 6 feet 9¾ inches for the length of the drum between the flanges.

2486. The drums shown in Figs. 890 and 891 are made of cast iron, in one piece, and are of the design shown in Fig. 893. This makes a very good drum for small sizes.

The smaller sizes of drums, such as have just been considered, are also often made of wooden lagging carried on

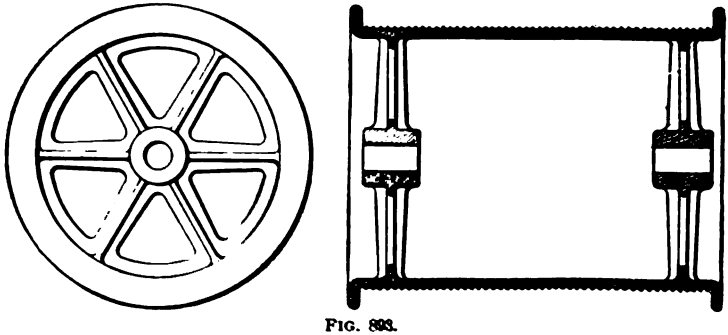

FIG. 893.

cast-iron spiders. In this case it is not necessary to allow the ¼ inch clearance between the coils of the rope. It can wind [illegible] and so take up only 1¼ inches. The drum

would then need to be $54\frac{1}{2} \times 1\frac{1}{4}$ inches $= 68\frac{1}{8}$ inches, or 5 feet $8\frac{1}{8}$ inches long. Such a drum as this is shown in Fig. 894. It is intended for a direct-acting hoisting-engine, A being both the drum shaft and the crank-shaft. B and B' are the journals, and C and C' are the ends to which the cranks are fastened. Two kinds of cast-iron spiders D and D' are shown, one with a flange and one without. The spider with a flange is better than the other, but it costs more, and if a flange is not used, extra length must be added to insure that the rope shall not run off the end. In very long drums of this style, it is found necessary to add a third spider midway between the other two to stiffen the drum against collapsing.

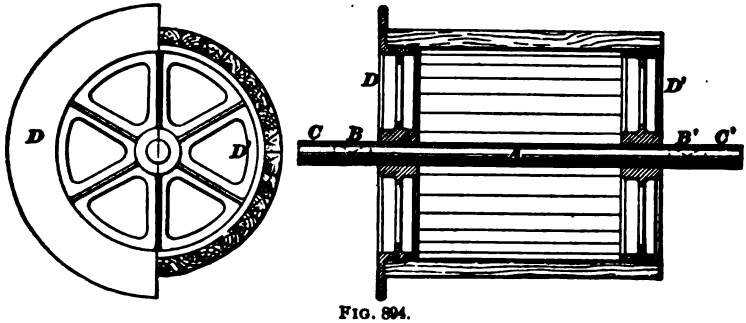

FIG. 894.

The lagging is bolted to the spiders, and the bolt-heads should be countersunk into it so as to clear the rope after it has bedded itself into the wood.

2487. Larger drums than the foregoing are often necessary, in order to wind larger ropes and greater lengths of rope. They are found as large as 30 feet in diameter and 20 feet long. Such drums are necessarily built up of several pieces. There is the hub, or sleeve, to go on the shaft, made either in one or two pieces, and with or without arms. Then there is the rim, made up of four, six, or eight segments, bolted together to form a cylinder. And, finally, there are the arms. These are made of cast iron, and designed to withstand compression, or of wrought iron, and designed to withstand tension. The latter method makes a lighter drum, though possibly a more expensive one.

CONICAL DRUMS.

2488. The **conical drum** is similar to the cylindrical drum, except in the form of its winding surface, which is in the shape of a frustum of a cone instead of in the shape of a cylinder. Conical drums are designed to take the place of cylindrical drums when it is necessary or advisable to equalize the load on the engines due to the weight of the rope. Suppose we have a single-compartment vertical shaft 800 ft. deep; that we are required to hoist 5,000 lb. of material at a trip; that the weight of the mine-car to be used is 3,000 lb.; and that the weight of the cage is 3,000 lb.

The load on the rope would then be:

Weight of material	5,000 pounds.
Weight of mine-car	3,000 pounds.
Weight of cage	3,000 pounds.
Weight of rope, say	3,000 pounds.
Total	14,000 pounds.

Let us use a cast-steel rope having 19 wires to a strand and a factor of safety of about 10. The breaking strength of the rope should then be about 14,000 lb. × 10, or 140,000 lb. By consulting Table 46, it is seen that a 1⅜-inch rope has a breaking strength of 63 tons, or 126,000 lb., and that 800 ft. of it weighs 2,400 lb. Using this corrected weight to sum up the load on the rope, we have, instead of the above,

Weight of material	5,000 pounds.
Weight of mine-car	3,000 pounds.
Weight of cage	3,000 pounds.
Weight of rope	2,400 pounds.
Total	13,400 pounds.

The breaking strength divided by this total load gives 9.4 as the factor of safety, which is sufficient. Now, the minimum diameter of a drum on which a 1⅜-inch rope, having 19 wires to the strand, should be wound is 60 times the diameter of the rope, or 1⅜ in. × 60 = 82½ in., or nearly 7 ft.

Let us then decide upon a drum 7 ft. in diameter, and we have the necessary data to go on with our calculation. At the beginning of the hoist, when the cage is at the bottom and has a loaded car on it, the load is 13,400 pounds, as above. This load is supported at the circumference of the drum, and if we multiply it by the radius of the drum, we will have a turning moment that must be overcome by the engine in order to make the hoist. This turning moment is 13,400 pounds × 3½ feet, or 46,900 foot-pounds. At the end of the hoist the load is 11,000 pounds.

That is,

Weight of material.....	5,000 pounds.
Weight of mine-car.....	3,000 pounds.
Weight of cage.....	3,000 pounds.
Total	11,000 pounds.

Multiplying this by the radius of the drum, the turning moment is 11,000 pounds × 3½ feet, or 38,500 foot-pounds. From this it appears that with a cylindrical drum the load against the engine is much greater at the beginning of the hoist than it is at the end of the hoist.

2489. Let us now examine another case. Suppose we have a double-compartment vertical shaft of the same depth, and that we are to hoist the same amount of material at a trip, in the same mine-car and on the same cage; but that an empty car and cage will be lowered in one compartment while the loaded car and cage are hoisted in the other. The two cars will then balance each other, the two cages will balance each other, and the loads will be as follows: At the beginning of the hoist, when the loaded car and cage are at the bottom, the gross load is 13,400 pounds.

That is,

Weight of material.....	5,000 pounds.
Weight of mine-car	3,000 pounds.
Weight of cage	3,000 pounds.
Weight of rope	2,400 pounds.
Total.....	13,400 pounds.

Multiplying this by the radius of the drum, the gross turning moment is 13,400 pounds × 3½ feet, or 46,900 foot-pounds, as before, but there is a counterbalancing load of 6,000 pounds.

That is,

Weight of mine-car	3,000 pounds.
Weight of cage	3,000 pounds.
Total.....	6,000 pounds.

This means a counterbalancing turning moment of 6,000 pounds × 3½ feet, or 21,000 foot-pounds. The net turning moment to be overcome by the engine at the beginning of the hoist is, therefore, 46,900 − 21,000 = 25,900 foot-pounds.

At the end of the hoist there is a gross head of 11,000 pounds.

That is,

Weight of material.....	5,000 pounds.
Weight of mine-car.....	3,000 pounds.
Weight of cage	3,000 pounds.
Total .....11,000 pounds.	

This is equal to a gross turning moment of 11,000 pounds × 3½ feet, or 38,500 foot-pounds. We also have a counterbalancing load of 8,400 pounds.

That is,

Weight of mine-car	3,000 pounds.
Weight of cage	3,000 pounds.
Weight of rope	2,400 pounds.
Total	8,400 pounds.

This is equal to a counterbalancing turning moment of 8,400 pounds × 3½ feet, or 29,400 foot-pounds, and leaves a net turning moment against the engine of 38,500 − 29,400 = 9,100 foot-pounds. In other words, the turning moment that the engine has to supply varies from 25,900 foot-pounds at the beginning of the hoist to 9,100 foot-pounds at the end of the hoist.

2490. It is to equalize the two loads and to give the engine the same amount of work to do throughout the hoist

that we resort to the conical drum; for it will readily be seen that the great difference in the two loads figured is due to the weight of the rope, and that if the radius of the drum

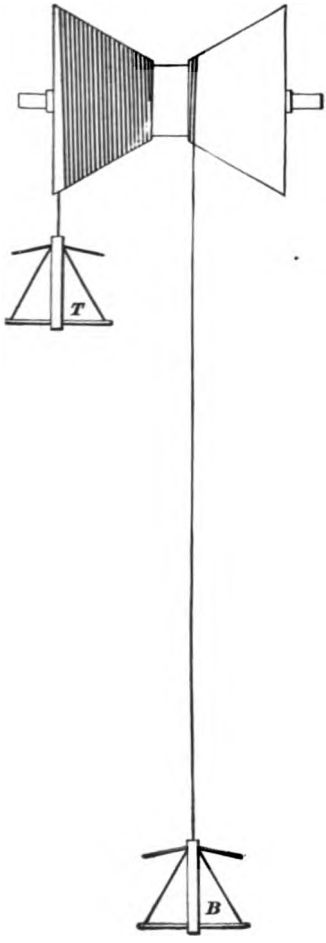

FIG. 895.

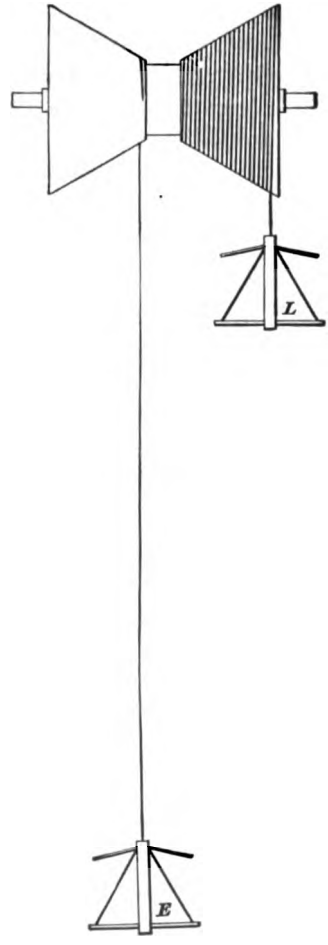

FIG. 896.

varies in the opposite direction to the variation in the load due to the rope it will eliminate this difference. To determine what these radii of the drum should be, we will refer to the accompanying diagrams, Figs. 895 and 896, which

represent the proposed hoist fitted with conical drums. In Fig. 895 we have the condition at the beginning of the hoist. Cage B is at the bottom and carries a loaded car; cage T is at the top and carries an empty car; and we are ready to make the hoist. The turning moment which the engine must overcome is equal to the weight of the material to be hoisted plus the weight of the cage and car at B, plus the weight of the rope, multiplied by the small radius of the drum, minus the weight of the car at T, multiplied by the large radius of the drum.

Suppose now that the hoist has been made and that we have, as shown in Fig. 896, the condition of things at the end of the hoist. The cage with the loaded car, which was at B and hanging on the small diameter of the drum, is now at the top at L and hanging on the large diameter. The cage with the empty car, which was at T and hanging on the large diameter of the drum, is now at the bottom at E and hanging on the small diameter. The turning moment which the engine must overcome is now equal to the weight of the material hoisted plus the weight of the cage and car at L, multiplied by the large radius of the drum, minus the weight of the cage and car at E, plus the weight of the rope, multiplied by the small radius of the drum.

2491. Now what is desired is that the load against the engine at the beginning of the hoist shall be equal to that at the end of the hoist. To determine what diameters of drum will produce such an effect, we have simply to make an equation of the two loads, and then solve the equation for the relation between the two diameters.

Let M = the weight of material;
C = the weight of cage and car;
R = the weight of rope;
D = the large diameter of drum;
d = the small diameter of drum.

Then, writing down the loads, as above, we get this equation:

$$(M + C + R)\,d - C \times D = (M + C)\,D - (C + R)\,d.$$

It will be noted that, instead of the radii of the drum, as used before, we have here used the diameters. That is because we generally speak of the diameter of a drum and not its radius, when referring to its size. In using the radius, we obtain the actual moment in foot-pounds, but in this case we do not care for the actual moment. We only want their relative values, and these can be obtained just as well by using the diameters for the multipliers.

To solve the above equation, we will proceed as follows:

Add $C \times D$ to both sides of the equation, and we have

$$(M + C + R)\,d = (M + C)\,D - (C + R)\,d + C \times D.$$

Add $(C + R)\,d$ to both sides, and we have

$$(M + C + R)\,d + (C + R)\,d = (M + C)\,D + C \times D,$$

which turned about is

$$(M + C)\,D + C \times D = (M + C + R)\,d + (C + R)\,d.$$

This may be written

$$D\,(M + 2\,C) = d\,(M + 2\,C + 2\,R).$$

Dividing both sides by $(M + 2\,C)$, we have

$$D = \frac{d\,(M + 2\,C + 2\,R)}{(M + 2\,C)}. \qquad \textbf{(213.)}$$

Rule.—*To find the large diameter of a conical drum, multiply the small diameter by the weight of the material to be hoisted, plus twice the weight of the cage and car, plus twice the weight of the rope; divide this product by the weight of the material, plus twice the weight of the cage and car.*

Applying this rule to the plant that we have been considering, we have

$$D = \frac{7\,(5{,}000 + 12{,}000 + 4{,}800)}{(5{,}000 + 12{,}000)} = 8.96 \text{ ft.}$$

The drum would then be 7 ft. in diameter at the small ends and 8 ft. 11½ in. at the large ends.

2492. Conical drums are more expensive to build than cylindrical drums, and they are not, therefore, used as

often. In capacity, they range as large as the largest cylindrical drums.

For hoisting from shafts less than 2,000 ft. deep, cylindrical and conical drums answer very well, but for hoisting from shafts of greater depths, they are not entirely satisfactory. As has been said, it is not good practice to wind the rope upon itself; and to wind it in a single layer on a drum, when there are three or four thousand feet of it, requires a very large drum. A very large drum is, of course, very heavy and costly. The great weight is objectionable because it forms a mass to be put into motion and brought to rest at each hoist, thus making the action slow or requiring surplus power in the engines for the purpose. It requires a large shaft and large bearings to carry it. The great length of drum necessitates the placing of the engines far apart, and this adds to the cost of the engines, foundations, and building. It also makes the fleeting of the rope, as it winds upon the drum from one end to the other, excessive, and this requires that the drum shall be placed at a considerable distance from the shaft and that carrying sheaves shall be used.

Because of these objections, other styles of drums have been tried with varying success. These are the *Reels* and the *Rope Wheels* before mentioned.

REELS.

2493. Reels are small narrow drums with high flanges, used for winding flat ropes. A drum of this style is illustrated in Fig. 897. The hub is increased in diameter above what is necessary for strength to such a size as is suitable to wind the rope upon. It is then cored out from the inside, so as not to leave too great a mass of metal. From the hub, arms of a T cross-section extend out radially to serve as a flange to support the rope laterally when it is all wound upon the reel. These arms are connected at their outer ends by a continuous flange having nearly an L cross-section, which is flared out so as to take the rope easily, if it is deflected sideways at all. The rope winds at first upon the

diameter *A A* and then upon itself, so that the diameter of the reel increases as the hoist is made and as the load due to the rope decreases. This serves to equalize the load due

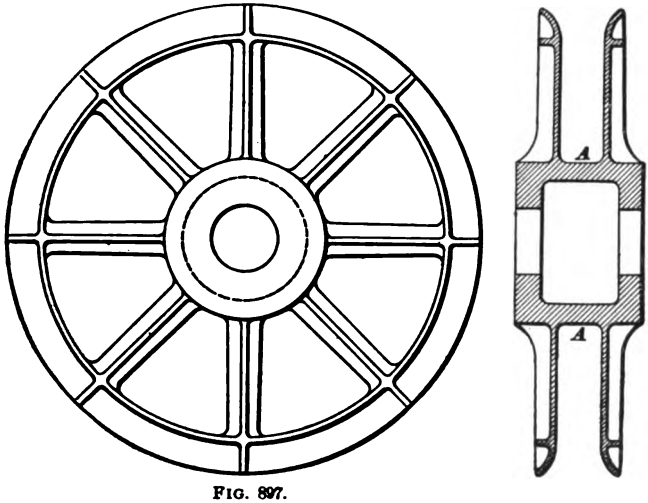

FIG. 897.

to the rope in the same manner as a conical drum does. Two reels are generally put upon the same shaft, and while one is hoisting from one compartment of a shaft, the other is lowering into another compartment.

2494. Let us take a case of this sort and calculate the diameters of the hub and flanges of the reel, and the size of the rope that should be used. Suppose, for instance, that we have a two-compartment vertical shaft 2,000 feet deep; that we are required to hoist 5,000 pounds of material at a trip, and that we are to hoist it in a self-dumping skip weighing 3,000 pounds.

The method of calculation will be somewhat similar to that used in determining the sizes of a conical drum, but not so direct, because, in this case, there is another variable quantity to contend with in the size of the rope. When using a round rope, we can tell directly by referring to a table what diameter of rope should be used for a given load; but, in using a flat rope, we can not tell by referring to the table what size of rope should be used, because we find that

several ropes give the desired strength; yet we do not know what thickness will suit the other conditions. We must, therefore, resort to the method of "trial and error" or use algebra. We will use the former. This will be clearer to the student as we proceed with the problem before us.

Referring to Table 49, Art. **2527,** we find that a flat steel rope with a breaking strength of 153,000 pounds weighs 5.15 pounds per foot; hence, 2,000 feet of it weigh $2{,}000 \times 5.15 = 10{,}300$ pounds. The total load on the rope would then be 18,300 pounds.

That is,

Weight of material.....	5,000 pounds.
Weight of skip.....	3,000 pounds.
Weight of rope.....	10,300 pounds.
Total.....	18,300 pounds.

This rope would give a factor of safety of 8.4, which is not quite enough when figuring from the dead load without that due to resistance of friction and acceleration.

A similar rope with a breaking strength of 204,000 pounds weighs 6.86 pounds per foot; hence, 2,000 feet of it weigh $2{,}000 \times 6.86 = 13{,}720$ pounds. The load on the rope would then be 21,720 pounds.

That is,

Weight of material.....	5,000 pounds.
Weight of skip.....	3,000 pounds.
Weight of rope.....	13,720 pounds.
Total.....	21,720 pounds.

This rope gives a factor of safety of 9.4, which is quite satisfactory.

Substituting the foregoing weights of material, skip, and rope in formula **213,** we have

$$D = \frac{d\,(5{,}000 + 6{,}000 + 27{,}440)}{(5{,}000 + 6{,}000)}.$$

$$D = 3.5\,d.$$

In other words, the large diameter, or that of the last coil of rope, should be 3.5 times the small diameter, or that of the

reel hub. If we assume the reel hub to be 4 feet in diameter, the last coil of the rope should be 3.5×4 feet, or 14 feet, in diameter, and we have such a coil of rope as is shown in Fig. 898.

The area of a circle 14 feet, or 168 inches, in diameter is 22,167 square inches, and the area of a circle 4 feet, or 48 inches, in diameter is 1,810 square inches. The difference

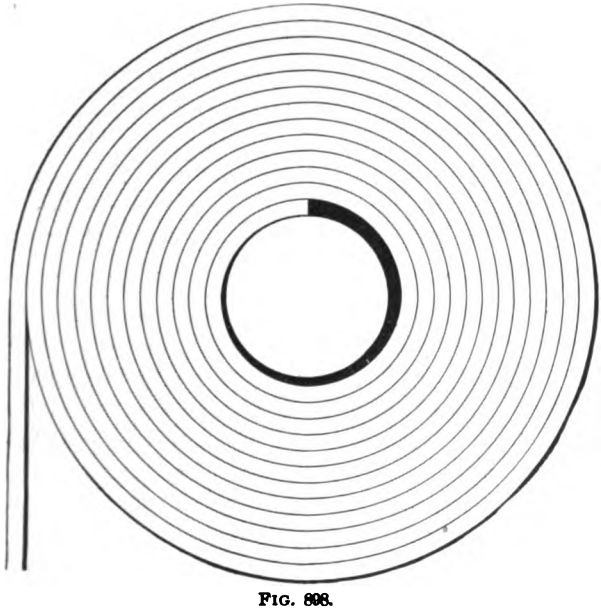

FIG. 898.

between these area, or 20,357 square inches, is the area of the annular ring which represents the rope. Now, the original proposition was that this rope should be 2,000 feet, or 24,000 inches, in length. If, then, we divide the area of the rope by its length, we will have its width, which in this case, of course, means its thickness. That is, $20,357 \div 24,000 =$ .84 inch, which is the thickness of a rope that would fulfil our requirements when wound upon a reel with a 4-foot hub. This is considerably thicker, however, than good practice would sanction, the thinner ropes, such as $\frac{3}{8}$ in., $\frac{1}{2}$ in., and $\frac{5}{8}$ in., being most in favor.

To obtain a thinner rope that will answer the same purpose, we will assume a reel hub 3 feet in diameter. The last coil of rope will then be 3.5×3 feet, or $10\frac{1}{2}$ feet, in diameter, and we have an annular ring of rope, as before. The area of a circle $10\frac{1}{2}$ feet, or 126 inches, in diameter is 12,469 square inches, and the area of a circle 3 feet, or 36 inches, in diameter is 1,018 square inches. The difference between these is 11,451 square inches, or the area of the rope, and this, divided by the required length, as before, gives .48 inch as the thickness of the rope. Call this $\frac{1}{2}$ inch. We find, by referring to Table 49, that a $\frac{1}{2}$-inch by 8-inch rope is the one we want. We then have for the dimensions of our reel—diameter of hub, 3 feet; width between flanges, $8\frac{1}{2}$ inches, allowing $\frac{1}{4}$ inch on each side of the rope for clearance; diameter of the flanges where they flare out, $10\frac{1}{2}$ feet.

2495. Reels have the advantage of being light and inexpensive to build. They are very narrow and require very short drum shafts, thus allowing the engines to come close together, and reducing the necessary foundations and building. They allow a partial equalization of the load on the engines, due to the rope, and they do not require any fleeting of the rope. These advantages, however, are more than counterbalanced by the disadvantages due to the use of a flat rope. These will be considered later in their proper place. Reels and flat ropes are used to some extent in the Western mining camps of the United States and in England. In the latter place they are no longer in favor among engineers, and several of them have been taken out to be replaced by drums using round ropes.

ROPE WHEELS.

2496. Rope wheels, as we speak of them here, are simply very short cylindrical drums, so short that only a few turns of the rope are accommodated. They are used for hoisting in two systems: *the Kœpe system* and *the Whiting system*, both of which use round ropes, and are designed to overcome the objections to cylindrical and conical drums.

2497. The Koepe System.—This may briefly be said to consist in the substitution of a single-grooved rope wheel in place of the ordinary drum. The winding-rope passes from one cage up over its head sheave; from there around the drum and back over the other head sheave, then down to the second cage. It simply encircles about half the periphery of the drum in the same manner as a driving-belt on an ordinary pulley, and is driven by the friction between the two. There is a balance rope beneath the cage, and the arrangement is, therefore, an endless rope, with the cages fixed at the proper points. The arrangement is shown in Fig. 899. The drum must, of course, be stronger than the ordinary carrying sheave, because it has to do the driving. It is usually lined with hardwood in which a groove is made to receive the winding-rope, the depth of this groove being generally equal to twice the diameter of the rope. Instead of being placed parallel, the head sheaves are placed at an angle with each other, pointing each to the groove in the drum. This reduces the side friction of the rope on the sheaves. This

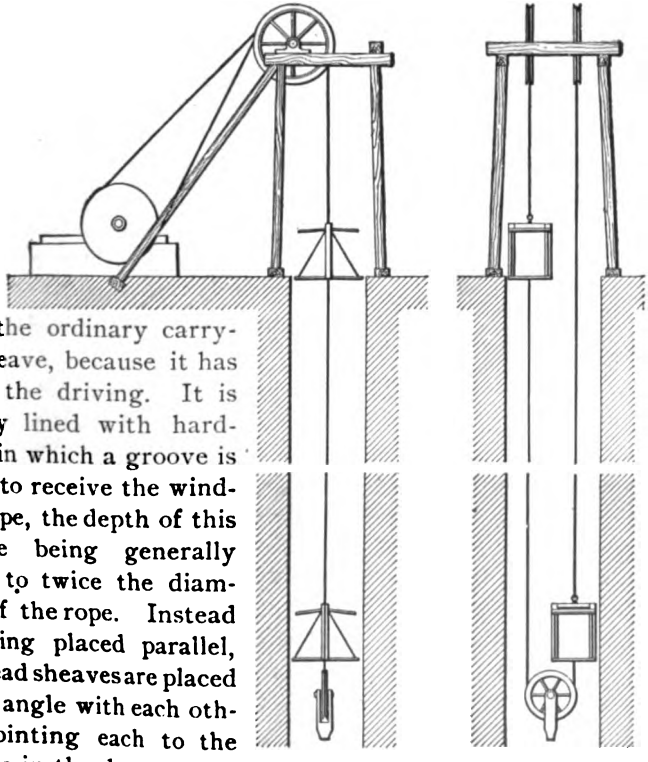

FIG. 899.

system has been in operation in Europe since 1877. Experiments made upon it have determined that, with a rope passing only one-half turn around the drum, the coefficient of adhesion is about 30%. This was with clean ropes. If the ropes are oiled, the adhesion becomes less, and slippage occurs, which, of course, is very objectionable. Slippage in such a case not only results in the wear of the drum lining, but it makes the reading of the hoist indicator incorrect, and leads to possible overwinding. Of course, if the hoist is indicated by marks on the rope, and if the engineer can see the cage itself, this is not so serious.

At the end of the hoist, if the upper cage is allowed to rest on the keeps, its weight and the weight of the balance rope are taken off from the hoisting rope. The consequence is that there is not enough weight left on the hoisting rope to produce sufficient friction with the drum to start the next hoist. To prevent this trouble, the keeps have been dispensed with, or else the rope has been made continuous and independent of the cage. To do this, cross-heads have been added above and below each cage, and connected by ropes or chains outside of the cages. The bridle chains are then hung from the top cross-head, and when the cage rests on the keeps the weight of the hoisting and balance ropes remains on the drum.

This system has its advantages and disadvantages. Only one drum is necessary for the operation of two compartments, and it is light and inexpensive to build. It is also very narrow, admitting of a short drum shaft and small foundations. The system permits a perfect balance of rope and cage, so that the work to be done by the engines is uniform, except for the acceleration, and consists only in lifting the material and overcoming the friction. There is no fleeting of the rope as it runs to and from the drum.

Yet with these points in its favor, it has disadvantages which prevent its being used to any considerable extent. Probably the greatest objection to the system is the liability of slippage of the rope on the drum. This, of course, must not occur, or there will be no end of trouble. Another

objection is that if the rope breaks both cages will surely go to the bottom. Still another, and a very important one, is that hoisting from different levels can not be done with entire satisfaction. This is because the cages are at a fixed distance from each other. The length of the rope, of course, is such that when one cage, which we will call *A*, is at the top, the other cage, which we will call *B*, is at the bottom. If hoisting is to be done from the bottom, this is satisfactory; but if hoisting is to be done from some upper level, cage *B*, which is at the bottom, must go up to that level and be loaded before it can go to the top. Then, when cage *B* goes to the top with its load, cage *A* must go clear down to the bottom, wait there while cage *B* is being unloaded, go up to the upper level and receive its load before it can start on its upward trip. For each trip, therefore, the time is lost that is necessary for a cage to go from the bottom to the upper level and be loaded; and two movements of the engines are necessary to make a hoist instead of one, as it should be. If, when cage *A* went to the top, cage *B* went down only to the desired level, and was being loaded there while cage *A* was being unloaded, it would be ready to go to the surface with its load directly, and this loss of time would not occur.

2498. The Whiting System.—This is a system of hoisting with round ropes, in which two narrow grooved drums or rope wheels are used in place of the cylindrical or conical drums ordinarily used. These drums are placed tandem. As shown in Fig. 900, the rope passes from one cage *A* up over a head sheave, down under a guide sheave, then to the drums *M* and *F*, around both of which together it is wound three times to secure a good hold, and out to a a fleet sheave *C*, then back under another guide sheave, up over another head sheave, and down to the other cage *B*. This shows the arrangement for a two-compartment shaft. When the system is to be used for a single-compartment shaft, one end of the rope carries the cage and the other end carries a weight to balance the cage, and is run up and down

in a corner of the shaft. A balance rope is shown in the cut, and is generally used, though it is not essential to the working of the system, as it is in the Kœpe system. When sinking a shaft, a balance rope can not be used, as it is always in the way at the bottom of the shaft, where the work is being done.

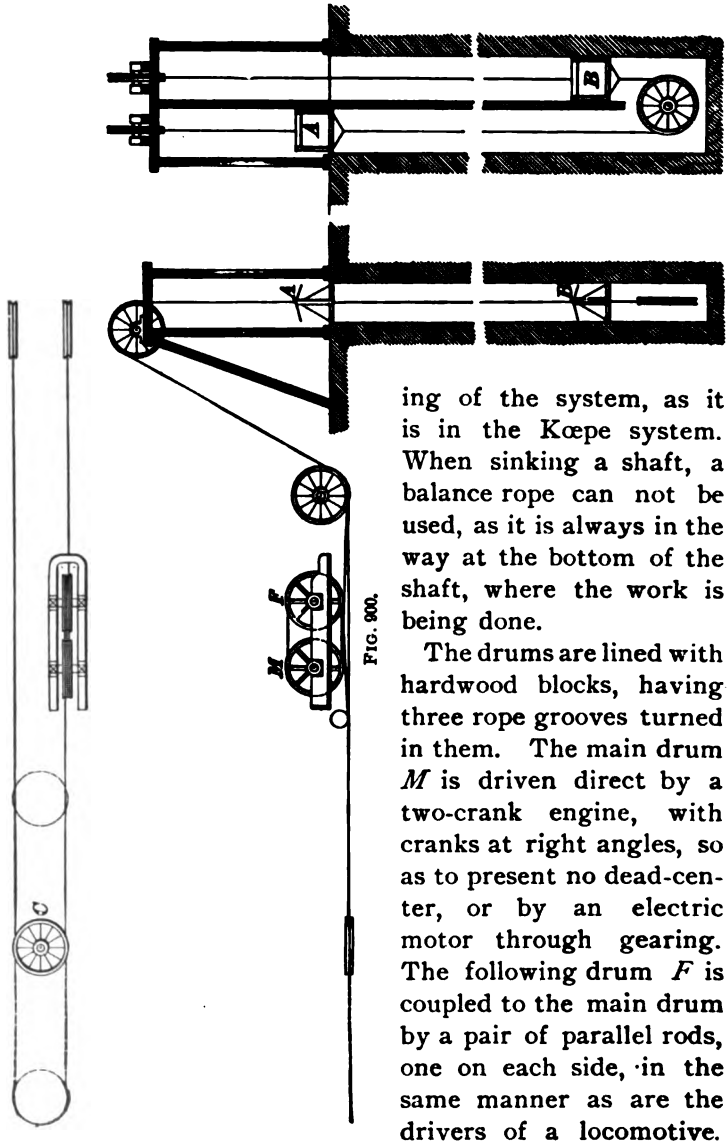

FIG. 900.

The drums are lined with hardwood blocks, having three rope grooves turned in them. The main drum *M* is driven direct by a two-crank engine, with cranks at right angles, so as to present no dead-center, or by an electric motor through gearing. The following drum *F* is coupled to the main drum by a pair of parallel rods, one on each side, in the same manner as are the drivers of a locomotive.

This gives six semi-circumferences of driving contact with the rope, as compared with the one semi-circumference of the Kœpe system. In the best plants on this system, the following drum F is tilted or inclined from the vertical an amount equal, in the diameter of the drum, to the pitch of the rope on the drum, the object being to enable the rope to run straight from each drum to the other without any chafing between the ropes and the sides of the grooves, and to eliminate the danger of the rope running off. This arrangement throws the shaft and crank-pins out of parallel with those of the main drum, but this is easily accommodated in the ends of the parallel rods.

The fleet sheave C is arranged to travel backwards and forwards, as shown in dotted lines, in order to change the working length of the rope. This makes the system very complete, and is desirable for the following reasons:

In sinking, as a greater depth is reached, it is necessary to let out rope in some way, that is, to increase its working length; in this system, it is done by moving in the fleet sheave towards the drums. If the shaft has been sunk 6 feet deeper, it is only necessary to move the fleet sheave in 3 feet nearer to the drums. Thus, it will also be seen that, if we are going to sink 500 feet during the life of the present rope, we will want a travel of the fleet sheave of 250 feet.

2499. In sinking and in regular hoisting, it is advisable to occasionally renew the fastenings at the ends of the rope, and to cut off a few feet of the ends where the greatest wear occurs. This shortens the rope, and the fleet sheave is moved in to make up the deficiency. A new rope stretches very considerably, and all ropes expand with the heat and contract with the cold. The length is therefore changing continually, and adjustment must be made in order to bring the two cages to their proper landings at the same time. This adjustment is easily made by moving the fleet sheave out or in.

2500. As was noted when considering the Kœpe system, in regular hoisting it is often necessary to hoist from

some other level than the bottom, and it is desirable to do so without any loss of time and in one motion of the engines. This can readily be done with the Whiting system. Let us suppose, for instance, that cage *A* is at the top and cage *B* is at the bottom, and that hoisting is to be done from some upper level. We have simply to run our fleet sheave out, and in that way shorten the working length of the rope until cage *B* comes up to that upper level. It can then be loaded and go to the top. While cage *B* goes to the top, cage *A* comes down, but only so far as the upper level, because the rope is short. It will then be loaded while cage *B* is being unloaded, and can go directly to the top without any lost time and with one motion of the engines.

2501. The drums used in this system are light and inexpensive. They are also narrow, admitting of short drum shafts and small foundations. The system permits a perfect balance of rope and cage, so that the work to be done by the engines is uniform, except for the acceleration, and consists only in lifting the material and overcoming the friction. There is no fleeting of the rope as it runs to and from the drum. It remains in one line at all times, and so allows the drums to be placed as close to the shaft as may be desired.

With the six semi-circumferences of contact between the rope and the drums, there is no slippage of the rope.

2502. The capacity of the drums is unlimited. Cylindrical drums, if they are grooved for the rope, and conical drums and reels will hold a certain fixed length of rope, and will, therefore, hoist from a certain maximum depth of shaft for which they were designed. If a plant is built on the Whiting system for a certain depth of shaft, and later it is desired to hoist from a greater depth, it can be done without any trouble. If we choose to use the same diameter of rope, we can hoist the same load and allow a smaller factor of safety, or we can hoist a smaller load and retain the same factor of safety. If we choose to use a larger rope, we can hoist the same load with the same factor of safety. In other

words, the length of rope does not bear any relation to the size of the drums.

2503. This system was used as early as 1862 in Eastern Pennsylvania, but it was not used extensively, because hoisting from great depths was not necessary. For depths of less than 1,000 ft., cylindrical and conical drums are quite satisfactory. Lately, however, this system has been coming into use as being the best for deep shafts. In the Lake Superior copper region there are now three plants, two of which are probably the largest hoisting plants in the world. Each plant consists of a pair of triple-expansion, vertical, inverted beam-engines, driving direct a pair of 19-foot drums. The high-pressure cylinders are 20 inches in diameter, the intermediate cylinders 32 inches, and the low-pressure cylinders, 50 inches, and all six of them have a 72-inch stroke. The rope used is a 2¼-in. plow-steel rope, and it hoists 10 tons of material at a trip from a depth of 4,980 ft., the deepest shaft in the world. Several plants on the Whiting system have been built in England, and two or more are working in South Africa.

DRUM APPLIANCES.

2504. Although the drum of a hoisting plant may be of either of the foregoing kinds, there are certain appliances which are necessary adjuncts in every case.

We may class among these: *Brakes*, *Clutches*, *Hoist Indicators*, and *Rope Fastenings*.

BRAKES.

2505. To fit a drum for hoisting service, it must, first of all, be equipped with a good brake; that is, a mechanism which will take firm hold of it at any point in its revolution and secure it against turning under any force that may be brought upon it. In a single hoist it may have a force brought upon it due to, and equal to, the weight of the

rope, the car, the cage, and the material to be hoisted applied at its circumference. In other words, if we have a hoist, as shown in Fig. 901, in which the diameter of the drum is 8 feet, the diameter of the rope is 1¼ inches, the length of the hoist is 1,500 feet, the weight of the car and the cage is 5,000 pounds, and the weight of the material to be hoisted is 5 tons, we will have a turning moment on the drum of 75,000 ft.-lb.

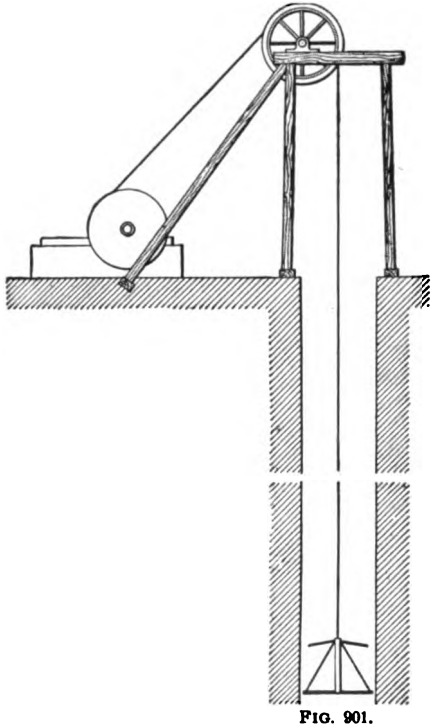

FIG. 901.

This result is obtained thus: Iron or steel rope 1¼ inches in diameter weighs 2.5 pounds per foot, or $2.5 \times 1{,}500 = 3{,}750$ pounds for 1,500 feet. The total load would, therefore, be,

3,750 pounds of rope;
5,000 pounds of car and cage;
10,000 pounds of material;

Total, 18,750 pounds.

This load would be applied at the circumference of the drum, or at a radius of 4 feet. The turning moment would then be $18{,}750 \times 4$, or 75,000 foot-pounds, and the direct pull on the brake, if it took hold at the same diameter, would be 18,750 pounds.

2506. If the hoist is double, and a tail-rope is used, the rope, car, and cage are balanced, and the brake will not have to be so powerful. Such a case is represented in Fig. 902. We will suppose in this case that the same sizes of

drum, rope, car, and cage are used; that the shaft is of the same depth, and that the same weight of material is

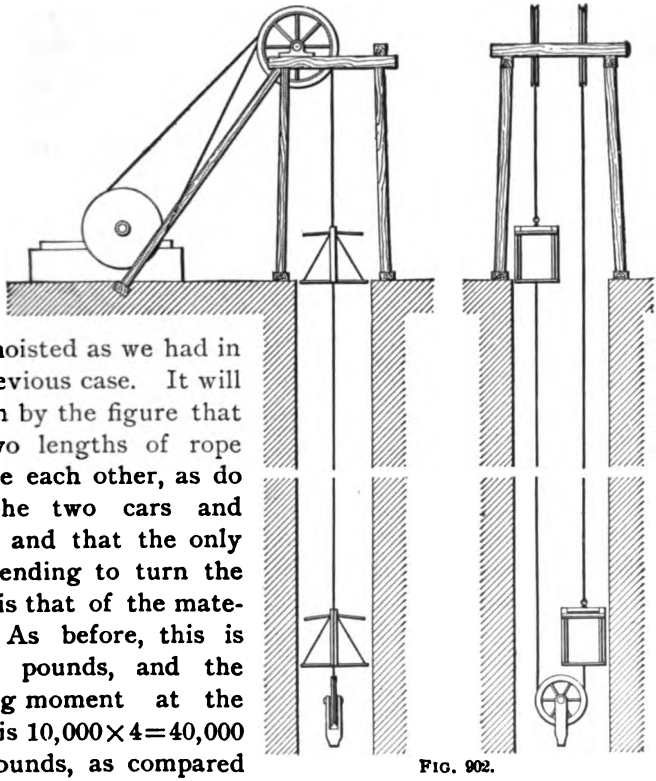

FIG. 902.

to be hoisted as we had in the previous case. It will be seen by the figure that the two lengths of rope balance each other, as do also the two cars and cages, and that the only load tending to turn the drum is that of the material. As before, this is 10,000 pounds, and the turning moment at the drum is $10{,}000 \times 4 = 40{,}000$ foot-pounds, as compared with 75,000 foot-pounds, which we had before. The direct pull on the brake would be 10,000 pounds, as compared with 18,750 pounds.

This shows that the brake must be built to suit the case.

2507. There are two styles of brakes in general use; namely, **block brakes** and **strap brakes,** both of which are friction-brakes. A block brake is one in which one or more blocks, or shoes, being secured against a circumferential motion, are forced radially upon the drum surface and hold it against rotation by the friction between them. Such a brake is illustrated in Fig. 903, in which A is the drum, B

is the block, or shoe, being a piece of hardwood about two feet long; C is a brake-lever with fulcrum at D; E is a rod to transfer the leverage up to the engine-house floor where the engineer stands; F is an adjusting screw to take up the wear of the brake-block; G is the hand-lever by which the engineer operates the brake. One advantage in this kind of brake is that it requires very little motion of the shoe to free

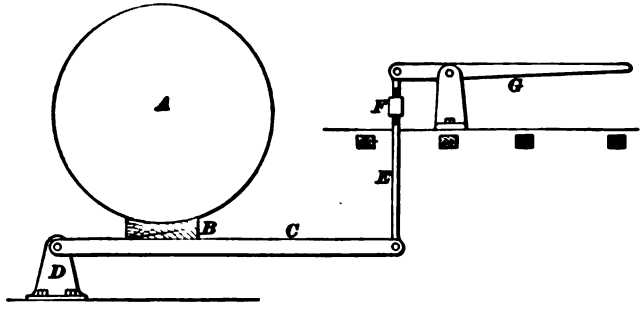

FIG. 903.

itself from the drum when the brake is off. This being the case, and the motion available at the other end of the brake gear being limited, it follows that the ratio of gearing can be great, and, consequently, also the force at the shoe.

This style of brake is very simple, but it is fast going out of use, because the single block gives so small an amount of rubbing surface, and the pressure of the brake, being entirely on one side of the drum, either lifts the drum or pushes it hard against its bearings.

2508. Block brakes with two blocks, commonly known as *post brakes*, give a greater amount of rubbing surface, and the pressure of the brake, being applied at two points diametrically opposite each other, is equalized. Such brakes are largely used in some localities. Fig. 904 illustrates a block brake. A is the drum; B, B are the blocks or shoes, which can be made long enough to encircle 90° on each side of the drum; C, C are the posts; D, D are the fulcrums, which should be tied together by a distance-piece, as shown, and should be securely fastened to the foundations;

E is a tension-rod, and *F* is a bent lever. Power is applied at the end of the lever *F*, as shown by the arrow.

An objection to this sort of brake arises from the fact that if the drum surface upon which the brake is applied is not

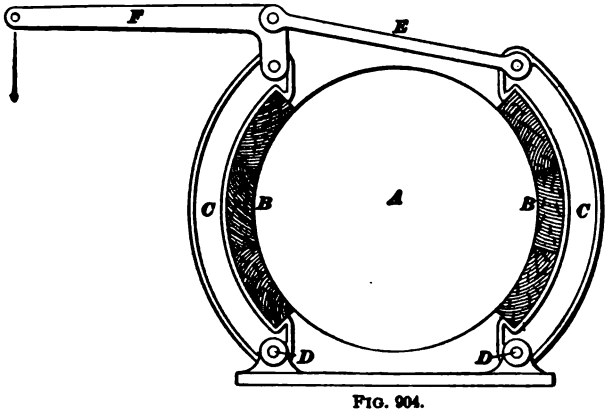

FIG. 904.

perfectly round, the resistance of the brake will not be uniform when applied while the drum is in motion.

Another objection to a block brake is that the wear is very excessive, owing to the small amount of surface in contact with the drum; and still another objection is the enormous force required to do a given amount of braking.

2509. There is a law of mechanics which states that the amount of friction between two surfaces varies directly as the pressure by which they are held in contact, and is independent of the area of those surfaces up to the point of abrasion. This law has been applied to the brakes of hoisting machinery, especially by those who advocate the use of block brakes; but it is not applicable, and for two reasons. In the first place, the operation of brakes is almost always at a pressure considerably beyond the point of abrasion, otherwise there would not be such wear both of the shoe and of the drum. In the second place, even inside of the point of abrasion, the law does not allow of a comparison between block brakes and strap brakes, because their surfaces are not similar. The surface of the block brake is short, rigid, and

practically flat, while the surface of the strap brake is long, pliable, and of a cylindrical shape. In the case of the strap brake, another law affects the results, a law which is familiar to us all in its practical application, and which we have all used when we have taken a couple of turns around a post with a rope, so that we could more easily resist some force at the other end.

2510. Strap brakes, in which the strap consists of a wrought-iron band, are used very extensively. The levers for transmitting the power from the hand-lever or treadle to the brake strap are variously arranged. In some cases the force is multiplied by several short levers, in others by one long lever. The treadle, however, has been replaced

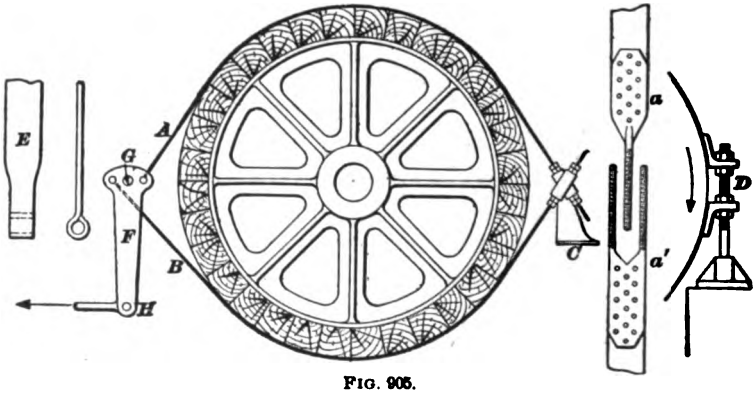

FIG. 905.

almost entirely by the hand-lever, and is now seldom seen except at old collieries. A single strap entirely surrounding the drum is sometimes used, but this is only satisfactory with small drums. The usual method is to have two straps, each extending half way around the drum. A brake of this sort is shown in Fig. 905, in which A is the upper brake strap and B the lower. One end of each strap is brought down to a bolt, one single and the other double, by riveting to the strap a forging a and a' as shown in the figure. The object in giving one end one bolt and the other two is to allow them to pass each other and yet have their lines of action intersect. These bolts are passed through a casting

C which is securely bolted to the foundation, and are fastened to it by four nuts on each bolt, two principal nuts and two jam nuts. This gives a means of adjusting the length of the strap to take up the wear. A second method of securing the back ends of the straps is shown at *D*. In this case a wrought-iron angular piece is riveted to each strap, and these are passed over the bolt that takes the place of the casting of the former arrangement. Nuts are used as shown, to adjust the straps for wear. The bolt should be short and stiff, so as to be well able to withstand the force tending to bend it when the drum is moving or tending to move in the direction shown by the arrow. The front ends of the straps are worked into eyes of somewhat less length than the width of the strap, as shown at *E*. These ends of the straps are fastened to the brake-lever *F* by means of bolts passing through their eyes and the brake-lever. The figure clearly shows the action of the brake. The brake-lever is supported on a pin at *G*, so that it can rotate about it. When the braking force is applied at *H*, through the connection shown, and in the direction of the arrow, the brake-lever tends to rotate, pulling down on strap *A* and up on strap *B*. These being held at the back end grasp the drum tighter as the force is applied.

2511. It will be noticed in Fig. 905 that the ends of the straps, both front and back, are brought in as close to

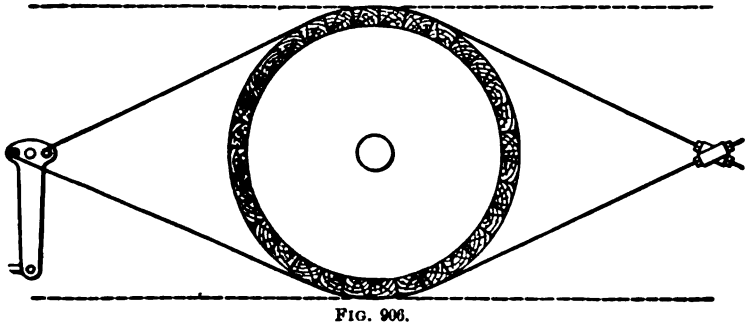

FIG. 906.

the drum as is practicable. This is done to give the greatest amount of contact between the drum and the straps,

and also to get the best effect from the force applied. Suppose, for instance, the brake were designed as shown in Fig. 906. It will be seen that here there is much less of the straps in contact with the drums than there was before, and also that the same pull on the straps will give much less pressure between the straps and the drum. This last idea may be more clearly understood if we imagine the straps to be lengthened indefinitely. Then we should have them practically parallel, as shown in dotted lines, and however great the pull, we should have no pressure between them and the drum.

2512. When brakes, such as we have been considering, are used on very large drums, they are found to be not stiff enough to lift themselves from the drum when the brake is off; for that purpose, springs are attached to the upper strap, so as to carry its weight. This idea is illustrated in Fig. 907, in which the springs at *A*, *A*, *A* are shown carried from the truss timbers by light wrought-iron rods.

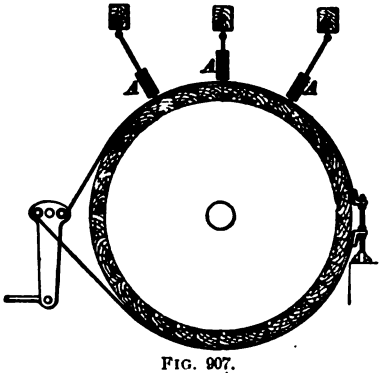

FIG. 907.

2513. So far, nothing has been said about the source of power to be applied to the brake. In the great majority of cases, it is hand power; but there are also many drums so large and winding such heavy loads that the power a man can exert by hand is not sufficient to brake them. Of course, the force that a man can exert can be multiplied indefinitely by levers and combinations of levers; but it must be borne in mind that, while the force is multiplied, the distance through which it can act is divided at the same rate. Now, it has been seen that a certain amount of motion is required at the brake band, in order to free it from the drum when it is off. This, then, limits the leverage that a man can

use. Suppose, for instance, it is assumed that, with a strap brake, the band must come off from the drum half an inch. It would, therefore, have to increase in diameter 1 inch, or, say, 3 inches in circumference. Then, supposing a man to exert his force to advantage through 3 feet, or 36 inches, the leverage is $36 \div 3 = 12$. That is, if a man can pull 50 lb. on his hand-lever, he can exert 50 pounds $\times$ 12 = 600 pounds circumferentially on the brake band. This is with simple levers. If such a form of lever be adopted as will give a constantly increasing leverage, the force applied to the hand-lever will be multiplied in an increasing ratio. A diagram will explain this more clearly.

2514. In Fig. 908, *A* is the hand-lever, with a fulcrum at *B* and a pin at *C*, by which it takes hold of a reach rod or

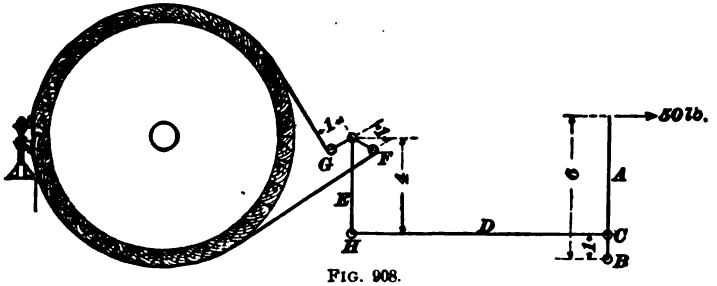

FIG. 908.

connection *D*. The connection extends to the brake-lever *E*, which has pins at *F* and *G*, by which the brake bands are operated. If we make the leverage of the hand-lever 6 to 1, and apply 50 pounds at its end, we will exert 300 pounds at the pin *C*, and, consequently, along the connection *D* to the end of the brake-lever *E*. Then, if we make the brake-lever with a ratio of 4 to 1, we will exert 300 pounds $\times$ 4 = 1,200 pounds at the pin *F* or *G*. This must be divided equally between them, however, which will give 600 pounds pull on each. Now, the distances through which these forces act are exactly in the inverse ratio of the powers. We have said that the brakeman can exert the force of 50 pounds through 36 inches. This, then, is the motion of the end of the hand-lever *A*. One-sixth of this, or 6 inches, will be the motion

at C, and therefore at H; one-fourth of this, or $1\frac{1}{2}$ inches, will be the motion at F and G. That is, F will increase its half of the brake band $1\frac{1}{2}$ inches in circumference, and G will do likewise with its half, making the total circumference 3 inches more, or the diameter 1 inch more, and thereby moving the band away from the drum $\frac{1}{2}$ inch radially. The levers are all shown in mid-position to make the figure more simple, but the relative leverages remain the same at all points in the motion.

This is a case of simple levers. Let us modify the scheme so as to have an increasing leverage, which is very easily done; but let us first realize that the *power* exerted at the hand-lever is just the same as that exerted at the brake band; that is, 50 lb. × 36 in. = 2 (600 lb. × $1\frac{1}{2}$ in.); and no system of levers or other mechanism can make this any more or less. What we can do, however, is to make a system of levers that will give us a changing ratio between the forces at the hand-lever and at the brake band.

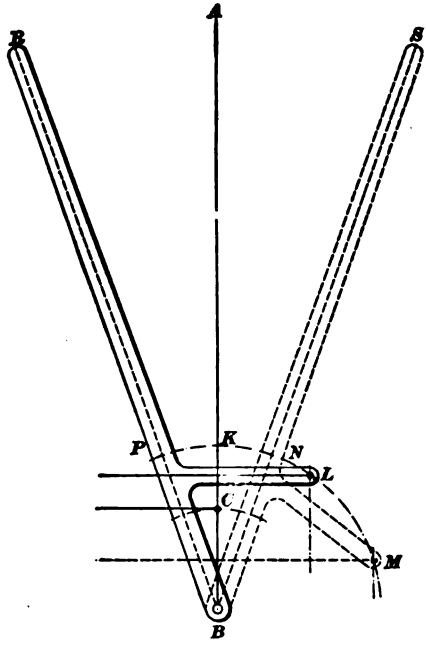

FIG. 909.

2515. In Fig. 909 we have shown our hand-lever to a larger scale. As before, B is the fulcrum, C is the pin where the reach rod takes hold, and the leverage is 6 to 1. The dotted lines show the extreme positions for a movement of 36 inches of the hand. Let us now take a length, as $B\,K$, for a radius to describe an arc of a circle about B. Then, from some point, as L, drop a perpendicular line and, parallel to it, another

at a distance from it equal to the horizontal motion of the point C. This second line crosses the circle at M. If $L\,M$ is greater than $P\,N$, we have taken L too far to the right. By trial, we can soon find a point L that is correct. Now, we have obtained the points for our new lever. Conceive the lever to be in its forward position and our reach-rod pin at L, instead of at C. We will then have a lever as shown at R in its forward position, and at S in its backward position. In the forward position, when only the clearance of the brake band must be taken up, and, therefore, but a small force required, the leverage is as 6 to $1\frac{1}{3}$, or $4\frac{1}{2}$ to 1, and in the back position, when the brake is on, and all the force is required that can be had, the leverage is as 6 to $\frac{1}{2}$, or 12 to 1. In other words, with this new hand-lever, a man, by exerting a pull of 50 lb. on the hand-lever, will pull with a force of 1,200 lb. on each of the brake bands, when the lever is in its back position.

2516. The question now arises, what will this amount do in the way of holding the drum against any force that may tend to rotate it? Such a force will resolve itself into a turning moment, and will be measurable in foot-pounds, as we have seen in the early part of this section. We must, therefore, transform the force that we get from the brake gear into another turning moment of the opposite direction.

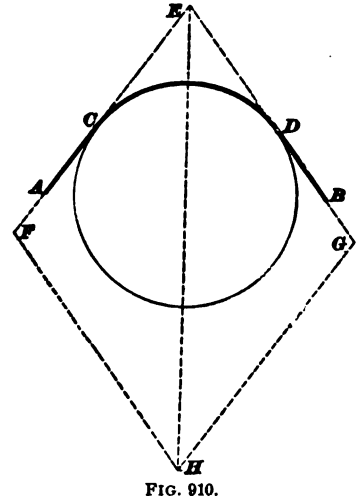

FIG. 910.

In Fig. 910 we have a drum and one brake band extending from a fixed end at A to a movable end at B, where the brake gear takes hold. These ends are some distance from the drum, so as to accommodate the anchorage at A and the brake-lever at B. We have, therefore, two tangents, $A\,C$

and $B D$. Extend these by dotted lines until they intersect at E, and from E lay off $E F$ and $E G$, proportional in length to the pull on the brake band. This we found to be 1,200 lb. acting at B, and we have an equal and opposite force acting at A. Using a scale of $\frac{1}{8}$ in. = 100 lb., and laying off these forces from E, we have $E F$ and $E G$ each $1\frac{1}{2}$ in. long. Completing the parallelogram of forces by drawing $F H$ parallel to $E G$, and $G H$ parallel to $E F$, we have the resultant $E H$, which is $2\frac{7}{16}$ in. long, and which, therefore, represents 1,950 lb. This is the pressure by which the brake band is held down on the drum. Now, we can count on about 40 per cent. coefficient of friction between a wrought-iron band and oak lagging, so our brake band would hold about $1{,}950 \times .40 = 780$ lb. The lower brake band would hold a like amount, making 1,560 lb. altogether. If this were applied to a drum 8 ft. in diameter, it would give a turning moment of 6,240 ft.-lb., or rather the power to resist that turning moment.

This is not the limit of the braking power of a man; but, from this we can readily see that there are many drums working under such loads that a man could not control them by hand. We must, then, resort to steam, compressed air, or water under pressure. At first, this seems to be very simple. Referring to the brake gear of Fig. 908, it will be remembered that we had a force of 300 lb. along the reach rod D to the brake-lever. Later, when we used the hand-lever of Fig. 909, we had 600 lb. along this connection, but we saw that even this would not be enough in many cases. Suppose that we wished a force of 6,000 lb. instead of 600 lb. If we attach this connection to a piston-rod of a small engine, we can easily get whatever force we may wish. Let us assume that we are carrying 100 lb. of steam in our boilers. This we can pipe to the cylinder of our small engine, and, by means of a valve, admit it to the cylinder whenever we want it. To get a pressure of 6,000 lb. from steam at 100 lb. pressure, we would require $6{,}000 \div 100 = 60$ square inches of piston area. Such a piston would be $8\frac{3}{4}$ inches in diameter. Our arrangement would then be as shown in Fig. 911. The hand-lever A, through its connec-

tion, opens the steam-valve *v* on the cylinder. This admits steam to the front end *a*, which drives the piston back, and so puts on the brake. The mechanism and its operation would be practically the same for either steam, compressed air, or water under pressure; and so far the arrangement is satisfactory. But when we come to use such a brake as this, we find that the action of steam or any other medium under such a pressure is so rapid that the brake is applied with its full force almost instantaneously. This subjects the various parts of the plant to very severe strains, which are objectionable. In fact, it is not permissible. One scheme to modify this action which has been used successfully is the use of the steam-valve that requires a long travel to give it a full opening. Such a valve can be opened a little, so as to allow the steam to leak through, and thereby

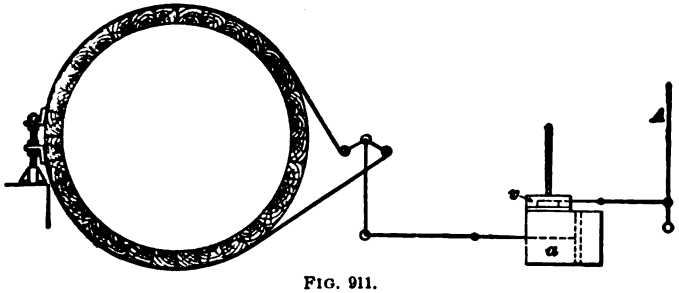

FIG. 911.

increase the pressure in the cylinder gradually. If such a valve, for the inlet of steam, is coupled to another working in the opposite direction for the outlet of steam, the operation is very successful. With this arrangement, as the inlet valve begins to open, the outlet valve begins to close. At first, this will simply pass a little steam through the cylinder without allowing any pressure to accumulate there. As the valves move farther, the amount of steam admitted increases, while the size of the outlet decreases, and as a consequence a pressure forms in the cylinder. This action continues until, when the inlet valve is full open and the outlet valve is entirely shut, the full pressure of steam is in the cylinder and the brake is full on. By reversing the motion of the valves the brake comes off.

CLUTCHES.

2517. In most hoisting plants there is no need of a clutch, because the motor is geared directly to the drum and operates only when it is necessary to make a hoist. Sometimes, however, several drums are operated by one motor or engine; it then becomes necessary to have a clutch fastened to the motor, by which it can take hold of the drum at any time. This principle of operation has been adopted in some very extensive hoisting plants in the copper regions of Lake Superior. The engine runs continuously and drives

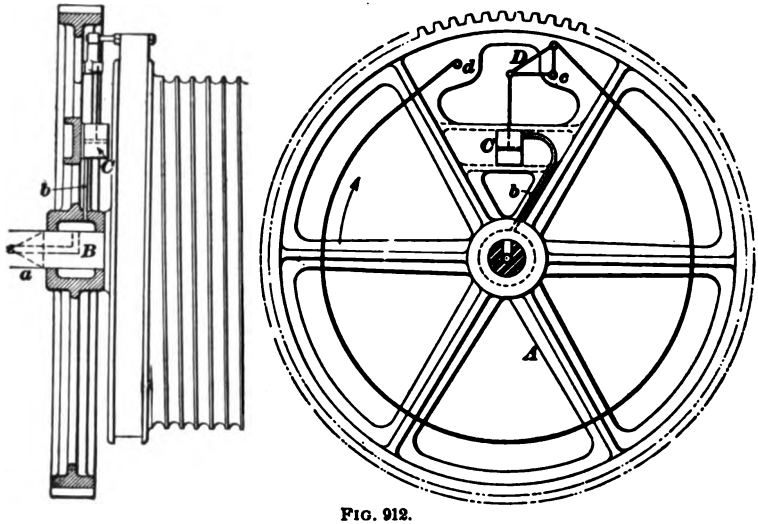

FIG. 912.

a clutch wheel on each drum. These clutch wheels are virtually strap brakes mounted on revolving wheels instead of on a steady foundation, as usual, and when they take hold of their drums they carry them around with them. The principle of these is illustrated in Fig. 912. There is a spur-wheel A, which is driven continuously by the engine through a spur pinion, not shown in the figure. This spur-wheel is mounted on a shaft which carries the gear around with it.

The shaft rests in two bearings, one next to the wheel, as shown at a, and the other at the other side of the drum.

Part of the drum is shown in the left-hand view, but is removed in the right-hand view in order to show the clutch more clearly. In the drum shaft there is a hole extending from one end through the center to the middle of the clutch wheel, and then out to the surface, as shown at *B*. From the end of the shaft this hole is connected by piping to a hydraulic valve operated by the *brakeman*, so that he can at will admit water or oil under pressure into it. The water comes out of the shaft into a recess in the hub of the clutch wheel, and from there is piped by *b* to the upper end of a small cylinder shown at *C*. Here it forces the piston down, or rather towards the center of the wheel, for it must, of course, operate irrespective of the position of the wheel; the piston carries with it one end of the bell-crank *D*. To the other end of this bell-crank is attached one end of the clutch band, the center *c* of the crank being carried by a pin secured to the clutch wheel. The other end *d* of the clutch-band is also held by a pin from the clutch wheel, and through this pin the drum is driven. As the piston moves towards the center of the wheel, it rotates the bell-crank, and through it pulls on the end of the clutch band. The other end being secured, this decreases the diameter of the band and makes it grip the drum, which is just inside of it, and which must, therefore, go around with it. The direction of motion is shown by the arrow. When the hoist has been made, the brakeman, by closing his valve, removes the pressure in the system and the clutch band comes off, being assisted by springs. The drum must then be controlled by a regular brake taking hold of its other end. One peculiarity of a drum built for this purpose is that it has a continuous hub throughout its entire length. This is babbitted like a journal-box or bearing, and is supplied with an oiling device, because it revolves on the shaft.

Of course, when a hoist is being made, the drum is carried around with the clutch wheel and shaft, and there is no motion between it and the shaft; but after the hoist has been made and the drum is standing still or is running the other way to lower the cage, there is motion between them,

for the wheel and shaft continue in the same direction as before. In a hydraulic clutch there should be some elastic body between the force that the brakeman applies and its point of application. A simple method is to put a spring between the end of the clutch band and the bell-crank to which the clutch band is attached. The object is to prevent the entire force of the grip taking effect at once.

When the clutch is put on, there is slipping between it and the drum until the latter has acquired the same velocity as the former. This gives time in which to overcome the inertia of the moving parts. If the drum is started too suddenly, the strain on the rope becomes so enormous that it is liable to break.

HOIST INDICATORS.

2518. A hoist indicator is a piece of mechanism forming part of the drum gear, designed to show the engineer the position of the cage or cages at every point during the hoist. In some form or other, these are quite generally used, though not universally. In some cases they are essential, while in others they can be omitted. The objection to their use is their liability to get out of order. Almost every piece of mechanism is liable to get out of order, and if an engineer is relying on his hoist indicator to make a landing, and it fails him, there is likely to be overwinding, with possibly very serious results. If it is possible, there should always be some additional way of locating the landing by which the engineer can check the readings of his indicator, and thus avoid a possible accident. In some cases, this second method may be better than the indicator and sufficient in itself.

2519. A very common and simple hoist indicator is made by inserting a pin of suitable diameter into the center of the end of the drum shaft, and using this as a miniature drum upon which to wind and unwind a chain or cord corresponding to the hoisting rope. This chain or cord is then led over a sheave or pulley at the top of a pair of guides

representing the hoist, and carries at its end a weight, pointer, or gong, which serves as the car or cage. The landings are then marked on the guides, and the whole is placed immediately in front of the engineer. If a gong is used, which is preferable, a pointer may also be added; and the gong is so arranged that it will be struck at a point some distance short of the landing, to call the engineer's attention.

This style of hoist indicator can not, however, be called good. It is in use in many places, partly because it is cheap, and partly because the men who do the hoisting depend upon a mark on the rope and not upon the indicator.

If indicators are used, they should be trustworthy and not liable to derangement from trivial causes. In other words, they should have a positive motion, driven by gearing from the hoisting machinery. For the exact location of the cage at the top of the shaft, most engineers rely upon the white marks made on the last coil or coils of the rope.

This plan he considers more accurate, more trustworthy, and less likely to lead him into error than any indicator which can be constructed. This faith in the rope as an indicator has spread to many mining engineers and superintendents, so that we now find many large collieries not provided with indicators. Although this use of the rope is good and should be adopted wherever possible, as a second indicator, to check the regular one, we do not recommend its use to the exclusion of an indicator.

2520. A very good indicator with a positive motion, and simple in its construction, is shown in Fig. 913. It consists of a worm A secured to the drum shaft B, engaging with and driving a worm-wheel C. This wheel is mounted on a shaft D, which is supported in the bearings E and E, and carries at its end a pointer F. There is a dial-plate G slipped over the end of the shaft and screwed to the forward bearing. This is just behind the pointer, and the different levels are marked on it, around its circumference, so that when the pointer indicates any one of them it will mean that the cage is at that level.

Let us suppose that we want an indicator for a shaft 800 ft. deep from rail to rail; that the drum to be used is 10 ft. in diameter, and that the drum shaft is 10 in. in diameter. The circumference of the drum is 31.42 ft.; hence, the revolutions per hoist are $800 \div 31.42 = 25.46$ revolutions. Then, if we let the pointer make one revolution per hoist, the ratio of our gearing will be 25.46 to 1. Let us, however, have it make a little less than one revolution per hoist, so that our velocity ratio will be as 25 to 1; then, we can use a single-threaded worm, and our wheel will have 25 teeth. If we make the pitch of the teeth $1\frac{1}{2}$ in., the circumference of the wheel will be $25 \times 1\frac{1}{2}$ in. $= 37\frac{1}{2}$ in., and

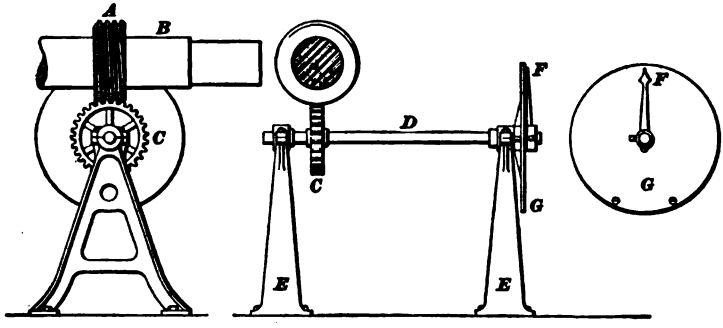

FIG. 913.

the diameter will be $11\frac{5}{16}$ in. The pitch of the worm screw will, of course, be the same as that of the wheel, and its diameter will be whatever is necessary to give sufficient strength outside of the shaft, since it bears no relation to the velocity ratio.

2521. One fault of nearly all indicators is that they give a regular movement throughout the winding, and the space over which the pointer travels is too small to enable the engineer to land the cage accurately. There are some exceptions to this, however, as indicators have been made with a differential motion to the pointer, which was greater at the time of landing and less during the middle of the hoist. They have also been made with two pointers, one to operate like the one in the hoist above described, and the

other to remain stationary during all of the hoist but the last few feet, then to start and move all the way around its circle during those few feet of the hoist. These have not been adopted to any extent, however, and reliance has mostly been placed on a mark on the rope to locate the landing accurately.

ROPE FASTENINGS.

2522. To fasten the rope to the drum, a very common practice is to pass the rope through a hole in the drum rim and clamp it to the drum shaft. Such a fastening is shown at *a* in Fig. 914, as applied to a wood-lagged drum. Care should be taken in such a case to make the radius of curvature of the hole at *A* as large as possible within the thickness of the lagging, so that the rope will not be bent any sharper than is necessary. When an iron drum is used, the thickness of the rim does not afford enough depth in which to bend the rope, and it is necessary to build in a pocket for the purpose, as shown at *b* in the figure.

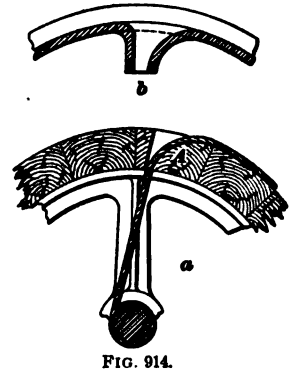

FIG. 914.

ROPES.

2523. Round wire ropes have already been considered in Mine Haulage, and as, in hoisting, flat and tapered wire ropes are also used, we will only consider these here. In the use of ropes we have also to consider certain details, as follows: *Rope-ends; Detaching Hooks; Tail-Ropes.*

2524. Iron or Steel Ropes.—As a choice between iron and steel for ropes, steel is the better. In the first place, a steel rope is lighter than an iron rope of the same strength, and, consequently, makes less weight to be handled during the hoisting. Weight here is objectionable because it is a part of the moving mass, and, therefore, requires power to put it into motion and to stop it again. It is also

objectionable because it requires stronger sheaves in the head-gear and drums in the engine-house and larger shafts and bearings wherever it is carried.

In the second place, a steel rope is smaller than an iron rope of the same strength, and, therefore, can pass around smaller drums and sheaves than the iron rope.

To illustrate these ideas, suppose we have a vertical shaft 1,800 ft. deep, and are required to lift at the end of the rope 10,000 lb. Now, a wrought-iron rope 1½ in. in diameter weighs 3.65 lb. per foot; hence, 1,800 ft. of it would weigh 1,800 × 3.65, or 6,570 lb. This, of course, must be added to the load to be lifted to get the total load on the rope, which is, therefore, 10,000 lb. + 6,570 lb. = 16,570 lb., or, say, 8¼ tons. The breaking strength of a 1½-inch wrought-iron rope, having 19 wires to a strand, is 39 tons, which gives a factor of safety of 39 ÷ 8¼ = 4.7.

On the other hand, a cast-steel rope 1 in. in diameter, having 19 wires to the strand, weighs 1.58 lb. per foot, or 2,844 lb. per 1,800 ft., which would make the total load 12,844 lb., or, say, 6½ tons. The breaking strength of a 1-inch cast-steel rope, having 19 wires to a strand, is 33 tons, and this gives a factor of safety of 5.1, nearly.

For this case, then, the wrought-iron rope weighs 131% more than the cast-steel rope and gives a lower factor of safety. Furthermore, the minimum diameter of the sheave or drum upon which it would be safe to work the wrought-iron rope is 1½ × 60 = 90 in., or 7½ ft.; whereas the cast-steel rope would work safely on a drum or sheave 1 × 60 = 60 in., or 5 ft. in diameter.

The cast-steel rope which we have used here is not the highest grade of rope. There are special high-grade ropes made of plow steel, which are considerably stronger, and a comparison between them and the wrought-iron ropes would show a still greater difference in favor of steel. A plow-steel rope 1½ in. in diameter, the same size as the above wrought-iron rope, has a breaking strength, as will be seen by referring to Table 46, of 110 tons, almost three times as much as the wrought-iron rope.

2525. Round Ropes.—Round ropes are much more generally used than either flat or tapered ropes. There are two kinds of them manufactured, one being more pliable than the other. The first of these contains nineteen wires in a strand, and has six strands wound around a hemp center. These are generally used for hoisting and power transmission because they are very pliable. The other kind contains seven wires in a strand, and has six strands wound around a hemp center. These are not generally used for hoisting because they are not pliable. They may be used, however, if necessary, and if extraordinarily large drums and head sheaves are used. When ordering a rope, the use to which it is going to be put should be stated to the maker, as his advice on the subject is valuable. Experience has demonstrated that the wear of a rope increases with the speed at which it is worked. It is therefore advisable to increase the load rather than the speed, if increased capacity is desired.

2526. Flat Ropes.—Flat ropes are composed of a number of strands, alternately twisted to the right and to the left, laid alongside of each other, and sewed together with soft iron wires. They are wound upon the vertical drums, or reels, which have been previously described, because, after the rope has coiled once around the drum, it coils upon itself and piles up vertically instead of spreading out horizontally. Such ropes and drums are used at many mines in the western part of the United States, and at some mines in Europe, but they are practically unknown in the anthracite coal regions of Pennsylvania.

Many advantages have been claimed for them that have not been proved by actual service. The counterbalancing action due to the rope coiling on itself is an advantage, and if the diameter of the drum be made small enough a remarkable uniformity in the load may be obtained. When the rope is all out, and so presents the greatest resistance, due to its weight, it winds upon a small diameter, and its leverage is, therefore, small; when it is wound up and

presents the least resistance, it winds upon a large diameter and its leverage is large.

As was stated in studying drums, it is also an advantage to have a reel as compared with a cylindrical or conical drum, on account of the short drum shaft that can be used, and the consequent bringing together of the engines. A reel is also less costly to build.

All the advantages, however, that can be counted up in favor of flat ropes are more than counterbalanced by the excessive wear of the rope, due to its coiling upon itself, to the nature of its construction, and by its greater first cost.

2527. In the following table are given the sizes, weights, and breaking strengths of steel flat ropes:

TABLE 49.

FLAT STEEL ROPES.

Size. Inches.	Weight per Ft. Pounds.	Breaking Strength. Pounds.	Size. Inches.	Weight per Ft. Pounds.	Breaking Strength. Pounds.
$\frac{3}{8} \times 2$	1.27	38,500	$\frac{1}{2} \times 3$	2.57	76,500
$\frac{3}{8} \times 2\frac{1}{2}$	1.52	46,000	$\frac{1}{2} \times 3\frac{1}{2}$	3.00	89,500
$\frac{3}{8} \times 3$	2.02	61,000	$\frac{1}{2} \times 4$	3.43	102,000
$\frac{3}{8} \times 3\frac{1}{2}$	2.28	69,000	$\frac{1}{2} \times 4\frac{1}{2}$	3.86	115,000
$\frac{3}{8} \times 4$	2.53	76,500	$\frac{1}{2} \times 5$	4.29	127,500
$\frac{3}{8} \times 4\frac{1}{2}$	3.04	92,000	$\frac{1}{2} \times 6$	5.15	153,000
$\frac{3}{8} \times 5$	3.29	99,500	$\frac{1}{2} \times 7$	6.01	178,500
$\frac{3}{8} \times 6$	4.05	122,500	$\frac{1}{2} \times 8$	6.86	204,000
$\frac{5}{8} \times 4$	3.96	143,000	$\frac{3}{4} \times 5$	5.81	183,500
$\frac{5}{8} \times 4\frac{1}{2}$	4.62	166,500	$\frac{3}{4} \times 6$	7.74	245,000
$\frac{5}{8} \times 5$	5.28	190,500	$\frac{3}{4} \times 7$	8.71	275,500
$\frac{5}{8} \times 6$	6.60	238,000	$\frac{3}{4} \times 8$	9.68	306,000
$\frac{5}{8} \times 7$	7.26	262,000	$\frac{3}{4} \times 9$	11.62	367,000
$\frac{5}{8} \times 8$	8.58	309,500	$\frac{3}{4} \times 10$	12.58	398,000
$\frac{5}{8} \times 9$	9.24	333,000	$\frac{3}{4} \times 11$	13.55	428,500
$\frac{5}{8} \times 10$	10.56	381,000	$\frac{3}{4} \times 12$	15.49	489,500

2528. Taper Ropes.—A taper rope is one made tapering from end to end, with the idea of giving it uniform strength while carrying its own weight. It is less in diameter and less strong at the cage end, where the load consists only of the cage, car, and its contents, and it is greater in diameter and stronger at the drum end, where the load consists of the cage, car, its contents, and the weight of the rope itself. Ropes of this kind, both round and flat, have been used to some extent. The idea is correct, theoretically, and a rope made thus will be stronger for a given weight than an ordinary rope, but, practically, the scheme is not a good one. A taper rope to do a given amount of work costs more than a straight one, and owing to the difficulty of manufacture it can not be made so perfect. Besides, it will not work well over the sheaves and drums, because of its changing diameter. In fact, it is not a practical rope, and, therefore, it does not require our attention.

2529. Rope-Ends.—One of the vital points of a hoisting plant is the attachment to the end of the rope. The bucket, car, or cage has fixed to it two or more lengths of chain terminating in a ring or shackle, and it is necessary to fasten to the end of the rope something by which a secure though temporary connection can be made to this shackle. It is generally called a **capping,** and exists in many different forms. The old plan was to employ two semicircular collars encircling the rope, these being prevented from slipping or drawing off by rivets which passed both through the rope and the capping. The driving of these rivets necessarily injured the ropes, and to remove this objection, a capping consisting of two halves of a conical sleeve with collars driven over it, as shown in Fig. 915, was used. The two parts of the sleeve are one piece with the link at *A*. They do not come together when closed over the rope; so when the rings *B, B, B* are driven down over the cone the two

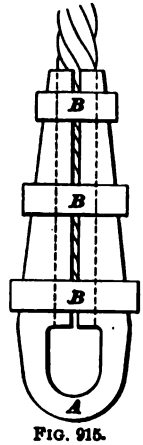

FIG. 915.

parts of the sleeve clamp the rope. The objection, however, is that there is not a positive hold taken of the rope, but reliance is placed on the friction of the clamp.

The best rope-end in use is a wrought-iron or steel conical socket, as shown in Fig. 916. This is in one solid piece. To attach it to the rope, the rope is first threaded through from the small end and allowed to project a short distance.

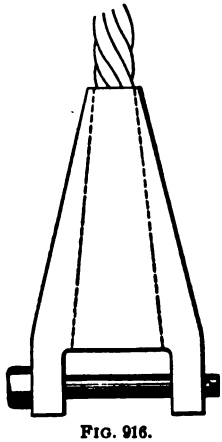

FIG. 916.

The ends of the strands are opened and bent back on themselves, part of each strand being cut away. This makes the end of the rope conical, and in that condition it is drawn back into the socket. As an additional security, a conical wedge is often inserted in the place originally occupied by the hemp core. Except under abnormal conditions, it is impossible to draw the thick end of the rope through the small end of the socket without first splitting it. If properly constructed of suitable material, such a thing could scarcely happen. For very heavy loads, collars are shrunk on. At the point where the rope leaves the capping, the wires are subjected to a sharp bending action, and often break. It is, therefore, necessary that careful inspection should often be made at this point. A plan is adopted at some collieries of re-capping the ropes at regular intervals, whether they appear to require it or not. In wet shafts the wires rust inside of the capping, and such action can not be detected. To prevent it, the capping is sometimes run full of lead, which is a very good scheme.

2530. Detaching Hooks.—In all hoisting, there is more or less danger of overwinding when the car is lifted too far, and it is then dashed more or less violently against some timber or other obstruction. Various schemes have been adopted to automatically prevent this, chief among which are the detaching hooks; although it can not be said that any of them have been a decided success. In the

United States, and especially in the eastern coal fields, there is a strong feeling against the adoption of any such device. It is held that they inspire the engineer with a misleading feeling of security; that they are more or less complicated in construction, and so need care, and destroy the simplicity of the plant; that they may be the direct cause of accident by introducing new elements of danger; that they add to the cost, and that they are not thoroughly reliable.

Again, it is held that the surest prevention of overwinding is obtained by the employment of a sober, reliable, and competent engineer, who is held personally responsible for overwinding accidents; by having a good brake and an engine thoroughly under the control of the engineer; by a reliable method of indicating the position of the cage, whether by hoist indicator, by mark on the rope, or by both, and by giving sufficient height to head sheaves to allow of considerable hoisting over and above that necessary for landing.

2531. In England, detaching hooks are used quite generally. They were originally of two kinds: those which simply detached the rope, and those which at the same time prevented the cage from falling; but, since additional means had to be provided in the former case for holding the cage, they have given way to the latter kind. There are several such hooks to be had, which differ from each other only in the smaller details. In all of them, detachment is effected by passing the rope through a circular hole in an iron plate, or through an iron cylinder, the size of which is sufficient to allow a portion of the hooks to pass through in its working state, but not to allow it to fall back again when disengagement has taken place. Such a hook is shown in Fig. 917.

It consists of two outside fixed plates A and A, enclosing between them two inner movable ones B and B, which can oscillate about a strong pin C passing through both plates and framework. The upper ends of plates A and A are made of uniform width, somewhat less than the diameter of the hole in the disengaging plate; but near the bottom there

are two projections *D* and *D*, to prevent the hook from passing entirely through the hole. The winding-rope is attached to the top shackle *E*, and the cage to the lower one *F*. When the two movable plates are placed on the central bolt, their upper parts close in opposite directions upon the pin of the shackle and entirely overlap it. In this position, they are secured by a copper pin *G*. In case of overwinding,

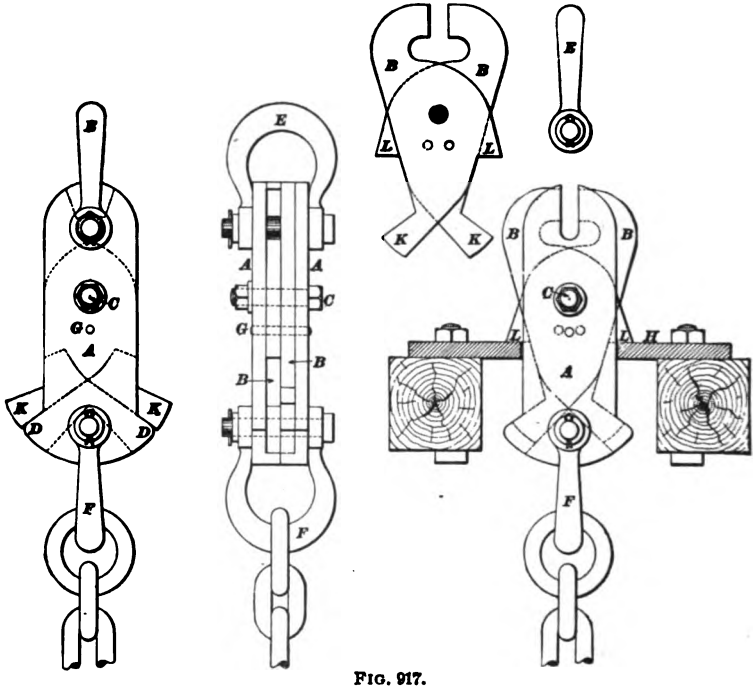

FIG. 917.

when the hook passes into the hole of the disengaging plate *H*, the two projections on plates *B* and *B*, shown at *K* and *K*, are forced inwards, turning the plates about the central bolt *C*. This shears the copper pin *G* and at the same time releases the shackle *E*. The inner plates are then in such a position that the projections on them at *L* and *L* can not pass down through the hole again. The cage then hangs by the hooks to the disengaging plate, and the rope goes on to the drum until it stops winding. An objection that can be

raised against this hook is that, being constructed of plates, there is considerable surface in contact between the moving parts, and unless they are regularly taken apart and oiled, there is danger of their rusting firmly together.

2532. Tail-Ropes.—When cylindrical drums are used for hoisting, perfect counterbalancing of the weight of the rope can be secured by several methods; but they have all

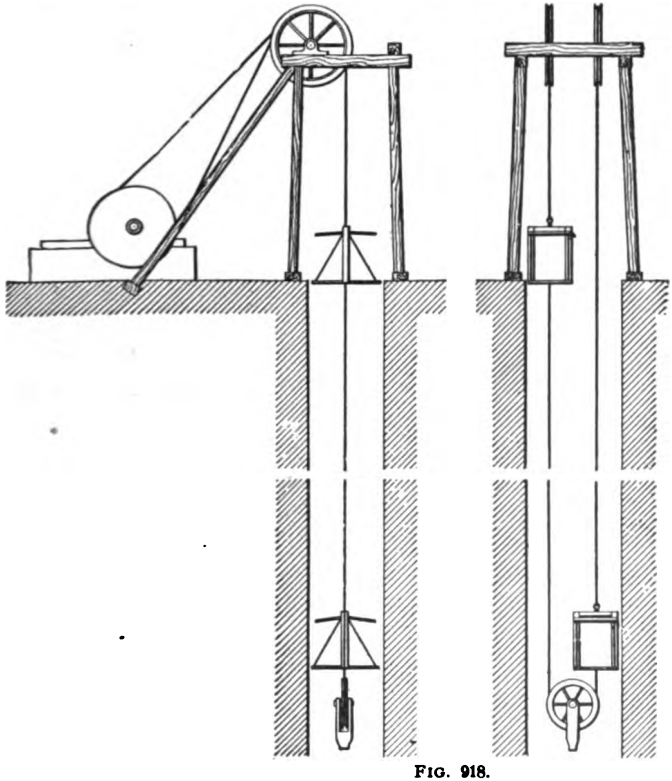

FIG. 918.

given way to the endless-rope system, for it has proved preferable to all others. It consists in attaching to the under side of one of the cages a tail-rope equal in size to the hoisting rope; and after running it down the shaft into the sump, where it forms a semicircle, returning it up, and attaching it to the under side of the other cage. Such an

arrangement is shown in Fig. 918. When this system was first introduced, it was thought that a pulley, or sheave, must always be placed in the sump for the tail-rope to pass around, the sheave being free to move up and down with any change of length of the rope, but secured against any other motion. The sheave shaft rotated in bearings arranged to move up and down in vertical guides, and the weight of the whole affair was carried on the rope. In many cases, however, no such pulley is used. All that has been done to keep the tail-rope from twisting is to fix two beams, side by side across the shaft in the sump, between which the tail-rope passes, and another one below this in the opposite direction passing through the loop in the rope. This arrangement is shown in Fig. 919. It is, perhaps, preferable to use a guide-pulley in the sump, as old winding-ropes can then be used. Otherwise, a special rope has to be employed, as old winding-ropes are not sufficiently flexible to run around such a loop without the assistance of a pulley. The tail-rope is connected to the bottom of the cage by any ordinary capping, with a bolt passing through it, and a cross-piece of the cage. By this system, perfect counterbalancing is obtained, as a factor is introduced which is equal and opposite to the hoisting rope. An objection to its use lies in the fact that a greater weight is put upon the capping of the hoisting rope, which is liable to be a weak part of the apparatus. Great care should, therefore, be taken to see that the capping is as strong or a little stronger than the rope itself. The load on the head sheaves is no more than the maximum load without the tail-rope; but it is a uniform load, and, therefore, possibly preferable.

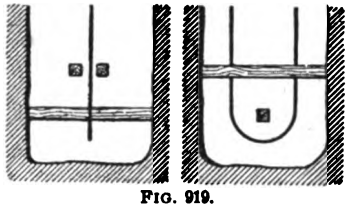

FIG. 919.

The power of the motor need not be so great when a tail-rope is used as when no tail-rope is used, because it does not have to lift the weight of the hoisting rope hanging in the shaft, this being balanced by the tail-rope; but, on the other

hand, the inertia of the moving parts is greater, due to the mass in the tail-rope.

Sometimes difficulties arise from the fact that the vertical center lines of the two cages are very near together, and that, therefore, the sheave that can be used in the sump to guide the tail-rope is of too small a diameter. To obviate this difficulty a chain is sometimes used instead of a rope.

CARS.

2533. We use the term car here in its broadest sense, covering whatever is on the end of the rope. In practice, however, the term used in that way would not be definite enough. In studying the different styles, we will do so under their specific names, that is to say: *Buckets; Crossheads; Cars; Cages; Gunboats, or Skips.*

BUCKETS.

2534. The simplest sort of a car for hoisting material from a mine is what is generally called a **bucket.** It is used to a great extent, both in small operations permanently and in large operations for sinking purposes. Fig. 920 represents such a bucket. They are usually made of boiler-iron, about three feet in diameter at the top, two feet six inches in diameter at the bottom, and of about the same depth. They are suspended by a handle, pivoted slightly below the center of gravity, and are locked in an upright position by loose rings on the handle which slip over pins on the rim of the bucket, as shown in the figure. When the hoist has been made and it is desired to empty the bucket, this ring is lifted up so as to release the bucket at the top, when it will upset of itself. It is well to use two such buckets for regular service, so that one can be left at the bottom to be filled while the other is hoisted with its load. This saves

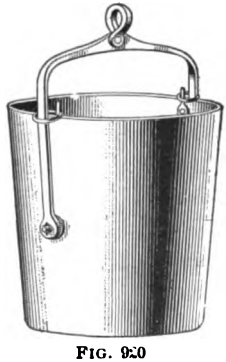

FIG. 920

the time occupied in the filling, but it necessitates an attachment to the rope that is quickly made and unmade, while it is yet entirely secure. A spring hook is used for this purpose, such as shown in Fig. 921.

FIG. 921.

Sometimes the bucket is suspended from a ring by three chains, instead of the handle shown, and in that case the loaded bucket at the top is replaced by an empty one, the loaded bucket being taken away to be emptied.

2535. In cases where the shaft is sunk to a considerable depth, and there is a likelihood of the bucket swinging about in the shaft, a **cross-head** is used to guide it. This is simply a frame, usually of wrought iron, fitted to run up and down on the guides, and arranged to take hold of the end of the rope just above the bucket. Such a cross-head is shown in Fig. 922, in which *a* is a side elevation, *b* a plan of the lower cross-piece, and *c* a plan of the upper cross-piece. The guides are shown at *A* and *A*. The cross-head consists of an upper cross-piece *B* and a lower cross-piece *C*, tied to each other by the angle-irons *D* and *E*. At each end of each cross-piece there is a shoe which fits over the guide easily, so that it can slide up and down. These four shoes, therefore, control the motion of the cross-head. The upper cross-piece is a vertical plate fastened to the shoes by angle-irons, and bent in the middle to clear the

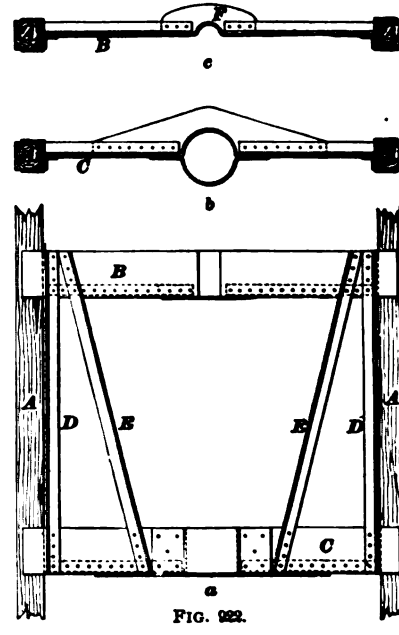

FIG. 922.

rope. It is stiffened transversely by angle-irons along its lower edge, but these do not pass the center because of the offset for the rope. To stiffen it here, a horizontal plate is riveted to the under side of the angle-irons, as shown at *F* in the plan *c*. The lower cross-piece, likewise, is a vertical plate, fastened to the shoes and stiffened in the same manner as the upper cross-piece. At the middle, however, it is bent out into a semicircle of considerable size, and to it is bolted another plate or strap, also bent into a semicircle. This forms a ring, into which is placed the box, shown in Fig. 923 to a larger scale. The box has flanges outside and inside, top and bottom. Its diameter *A* is the same as the inside diameter of the ring of the lower cross-piece, and the distance *B* between its outside flanges is the same as the depth of the cross-piece. In other words, it is made to fit the ring, and becomes a part of the cross-head when in place, with the strap bolted over it. It is lined with wood, and both it and the wooden lining are in halves, so as to get them over the rope. The rope has a cone on its end—sometimes the rope-socket is made to answer this purpose—and this cone fits in the conical hole in the wooden lining.

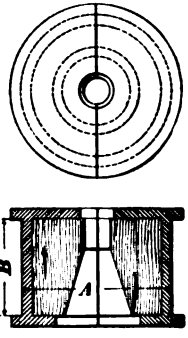

FIG. 923.

The cross-head then rests on this cone and is carried up and down by the rope, which it in turn guides and steadies. In sinking, there is always more or less distance from where the guides end down to where the loose rock is. Stops are, therefore, put on the ends of the guides to take the cross-head when it comes down, and to allow the bucket to go on to the bottom. When the bucket comes up again, the cross-head is picked up and carried to the top, during which time it keeps the bucket from swinging about.

2536. Occasionally, when the hoistway from the mine is a slope, and especially when it approaches the horizontal, the ordinary mine-cars are used to convey the material to the surface. They need not differ, however, from the

ordinary car because of this service, and we will, therefore, not take them up here. They are not essentially a part of the hoisting plant, and so do not enter our present studies.

CAGES.

2537. The surface conditions of a hoisting plant are often such as to necessitate the carrying of the material some distance from the mouth of the hoistway. It is then advisable to bring the mine-cars to the surface with their contents, in order to avoid the unloading and reloading of the material; and this, too, when the hoistway is a vertical shaft or a slope that is too steep to run the mine-cars on. In such a case an auxiliary car is used to carry the mine-cars; and this auxiliary car is known as a **cage**, whether it is for a slope or a shaft.

When the inclination of the slope exceeds 35°, the cars are usually raised on cages, because the material will not stay in them on steeper pitches. These cages are sometimes built to run on a slope-track as arranged for mine-cars, but, to insure stability, they are generally of a broader gauge. The head-room necessary is governed not so much by the form of cage as by the length of the car and the inclination of the seam. This height is less when the cars are placed on the cage with their length across the slope than when they are run on lengthwise; but as this arrangement increases the width of the slope, it is not always an improvement on the other method. When the inclination of the vein is very steep, the wheels are sometimes placed on the sides of the cage and above the center of gravity, and are run on tracks or guides supported by timbers on each side of the slope. Such slopes resemble shafts in many particulars, and in metalliferous mining districts would be so described.

2538. The cage shown in Fig. 924 is a good stiff cage built of wood, simple of construction and easy to repair. Its details will be readily understood from the illustration, except, perhaps, the device for locking the car to prevent its running off during the hoist. The platform *A* having a

piece of the car track on it, may move vertically up or down. As shown in the side elevation, it is resting on the horizontal timbers *B* of the cage in a position ready for hoisting. At the end of the hoist, when the cage settles upon the keeps *C* and *C*, shown in the end elevation, this platform reaches them first and is supported by them while the rest of the cage descends still farther, until the timbers *D* and *D* rest upon the keeps also. The track on the plat-

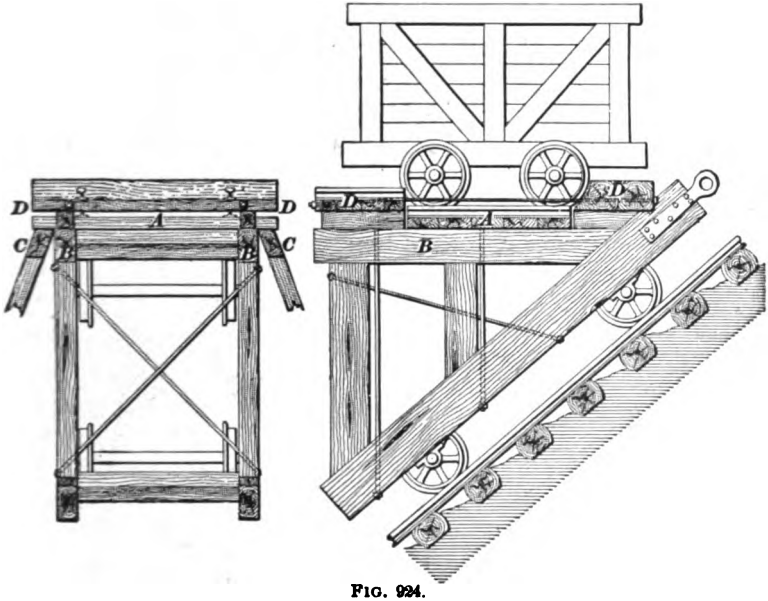

FIG. 924.

form *A* is then at the same level as that on *D*, and the car can be run off and replaced by another. When the new car is on and we are ready to make another trip, the cage is lifted from the keeps, but the platform remains until the timbers *B* and *B* of the cage come up and pick it up. Then the keeps are swung back out of the way, and the descent is made. Keeps for such a purpose must be part of every cage, whether for slope or shaft.

2539. Fig. 925 shows a **shaft cage** of modern construction built of wood. Besides the cage proper, it shows

several appliances that should be common to all cages in some form or other. In the first place, there is a covering *A* and *A* at the top, called a **canopy,** or **bonnet,** to protect any person on the cage from objects falling down the shaft. This is shown as made of heavy wrought-iron plate,

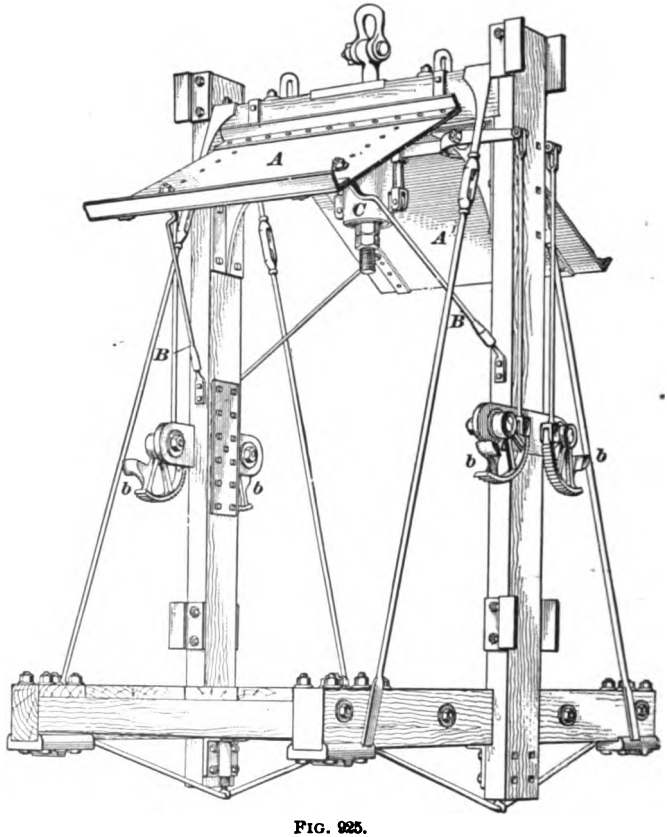

FIG. 925.

with flanges or angle-irons to stiffen it. Sometimes planking is used for this purpose. These canopies are required by law in the State of Pennsylvania. They are usually inclined, so that objects falling upon them will slide down and drop upon the cage. To prevent objects of moderate size

from wedging between the edge of the canopy and the shaft lining, they are usually made shorter than the cage, so that a space of about a foot is left between the lower edge of the canopy and the shaft lining or buntons. One part of the canopy, as *A*, is fastened to the cage by two hinges and held up by two rods *B* and *B*, which have sockets at their lower ends, and which fit over pieces bolted to the uprights of the cage. This is done so that long timbers for props and other purposes may be lowered on the cage very readily.

2540. Besides the canopy, as shown in the figure, there are also **safety-catches,** consisting of a pair of toothed cams *b* and *b*, located on either side of the cage, near the guides, and arranged to be thrown in against the guides by the spring *C*, in case the rope breaks.

The law of the State of Pennsylvania requires an improved safety-catch on every carriage used for lowering or hoisting persons.

In Fig. 926 the safety-catches are shown to a larger scale. The upper head-piece, or cross-piece, of the cage is shown at *A*. The draw-bar *B*, to which the rope is attached, runs through this and extends far enough down to carry a plate *C* with a spring between it and the head-piece. The weight of the cage, therefore, is carried by the head-piece through the spring on the plate *C*. The spring shown in the figure consists of three pieces of rubber with cast-iron plates in between them, to guide them and help them keep their form under pressure. Rubber springs, however, are not essential. In this same design of safety-catch, a helical steel spring could be used instead of the rubber; or, with a little different design, a flat steel spring could be used. Around the spring is shown a cylinder *D*, which serves two purposes: it protects the spring from the moisture in the shaft and also serves as a guide to the plate *C* by being cut away to receive it at *E* and *E*. To the plate *C* are attached links *F*, *F*, which in turn take hold of the levers *G*, *G*. A plan of one of these levers is shown at *H*. From the outer ends of the levers, connections *K*, *K* extend down to and

are attached to the eccentric-shaped toothed brass cams, or dogs, *J*, *J*.

Let us now follow out the action that takes place from the draw-bar to the cams at the left. The draw-bar is shown in its lower position, being pushed down by the rubber spring and not held up by the pull of the rope. It has carried down with it the plate *C*, the links *F* and *F*, and the inner ends of the levers *G* and *G*. The outer ends of the levers are, therefore, in their upper position, as are also the connections *K* and *K*; and this puts the cams, or dogs, into

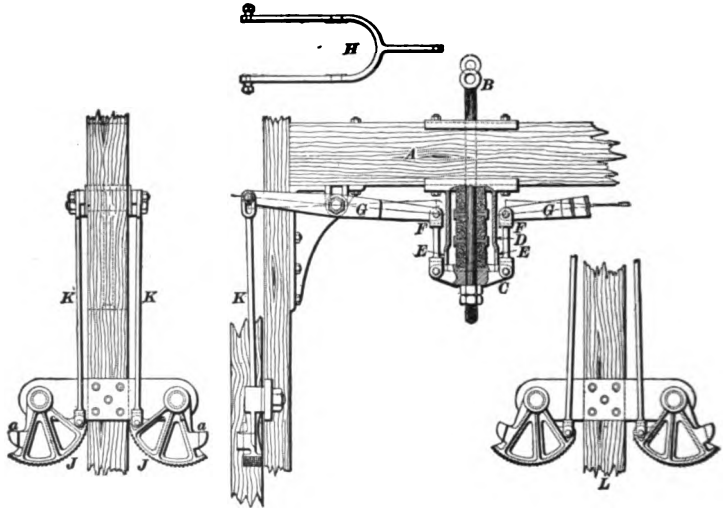

FIG. 926.

such a position that their first teeth will engage with the guides. The instant this occurs, if the cage is falling, the cams will be carried around, digging their teeth deeper and deeper into the guides, and thereby stopping its fall. The cams are provided with a projection *a*, which strikes the guides and prevents them from turning all around.

When the cage is picked up by the rope, the spring on the draw-bar is compressed, allowing the draw-bar to take its upper position as shown by the dotted circles. This carries up the plate *C*, the links *F* and *F*, the inner ends of the

levers G and G, and causes the outer ends of the levers and their connections K and K to move down, thus rotating the cams away from the guides. This position of the cams is shown at L.

Some engineers prefer placing the cams, or dogs, nearly opposite the cage platform, while others place them near the top of the cage. The latter arrangement seems preferable, because it simplifies the construction.

2541. One of the chief difficulties that has been experienced in the use of safety-catches is their tendency to be thrown into action by any sharp jars or shocks to which the cages may be subjected, by the sudden stopping of the engine or by the landing of the cage at the top or bottom. But accidents from this cause are now extremely rare; and if proper care is taken in adjusting the springs and catches, there seems to be no reason why any such difficulty should occur. Practical tests of the catches in use, made by hanging the cage and allowing it to drop, show that they are, as a rule, very efficient devices. The cams usually take hold at once, the cage dropping only a few inches, or, at most, a few feet. When the guides are very greasy or wet, the trial tests are sometimes not so satisfactory, and the cage may drop several feet before the cams take a firm hold and stop it. The results are still less satisfactory when the guides are covered with ice; but even in this latter case, the cage sometimes drops less than one foot.

Fortunately for the utility of safety-catches, ropes are usually broken while a loaded cage is being raised, and the cage has an upward momentum; if a rope breaks on the empty side, and when the cage is rapidly descending, at a speed, say, of 30 ft. or 40 ft. a second, its momentum is so great that either the catches must break or the cage or guides and shaft lining will be torn to pieces. The catches generally hold, and either the guides or cage suffer more or less injury under such circumstances. In experimental tests, with ice-covered guides, the cage has been known to fall eight to fifteen feet before the cams plowed their way

through the ice and took firm hold of the guides; but the momentum the cage acquired was so great that the guides were destroyed.

2542. Both of the cages already illustrated are built principally of wood. This is not the universal practice, for iron and steel cages are also largely used. In Fig. 927

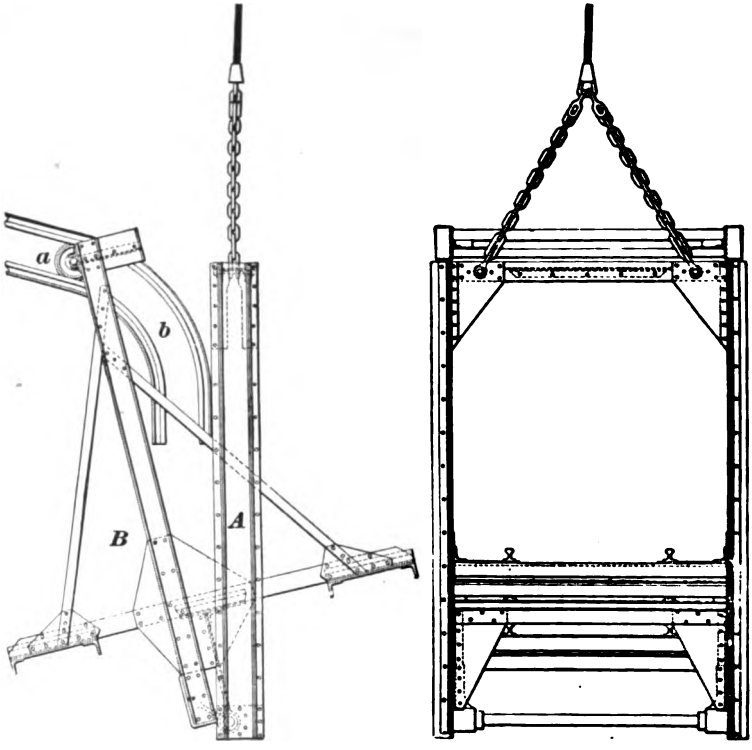

FIG. 927.

is shown an iron cage which also illustrates another feature; that is, its ability to dump The figure shows the cage partly dumped. The mine-cars are run on to this cage at the bottom, just as they are on any cage, except that they are more thoroughly secured, and are hoisted into the head-house and dumped while still on the cage. As will be seen,

the cage consists of two parts. The first, a frame *A* made up of the upper cross-piece, to which the rope is fastened, two guide pieces, and a distance-piece at the lower end; the second, the cage *B* which rests upon trunnions secured to the frame *A*. The uprights of the cage carry dumping wheels *a* on each side, which run in special tracks *b* made for them in the head-frame, and so turn the platform of the cage over to the dumping angle. The use of dumping cages is principally limited to cages used for simply raising mine-cars from the surface to the top of the breaker.

Few engineers consider the use of dumping cages for winding shafts advisable or even allowable. They are, at best, cumbersome, more or less complicated, and, consequently, liable to accident.

GUNBOATS, OR SKIPS.

2543. Gunboats, or skips, are self-dumping cars used for hoisting in a slope. They are usually built of boiler-iron, although sometimes of wood, and are generally large enough to hold several mine-car loads; that is, they often carry four to five tons of coal. A scheme peculiar to gunboats is to have the wheels fixed upon the axles and the axles seated in pedestals. This insures smoother running than is obtained with loose wheels, but the pedestals are so located that they are not readily accessible for lubrication.

2544. Fig. 928 represents a modern gunboat, closed along the top *a* and open at the end *b*, which is cut about the angle of the slope in which it is to be used. It will be noticed that the bottom, sides, and top are stiffened by angle or tee irons, and the back is stiffened and protected by 3-inch planks, backed by 3 in. × 6 in. timbers. The details of the pedestal bearings are shown in Fig. 929. They consist of three castings: the pedestal, or bracket, *a*, which is bolted or riveted to the gunboat; a pivot casting *b*, and the bearing proper *c*. The bearing

rests upon the axle and carries, by means of trunnions *d*, the pivot casting *b*, on the top of which is placed a

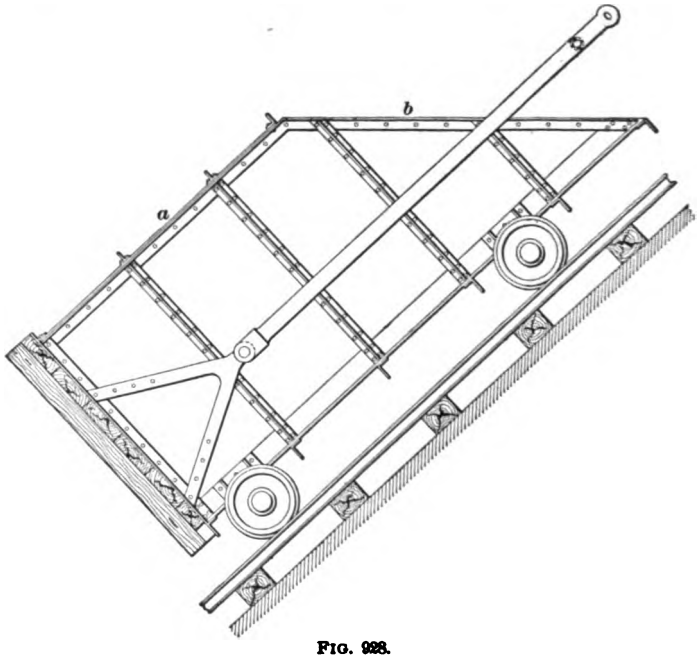

FIG. 928.

rubber cushion *e* to lessen the shocks between it and the bracket.

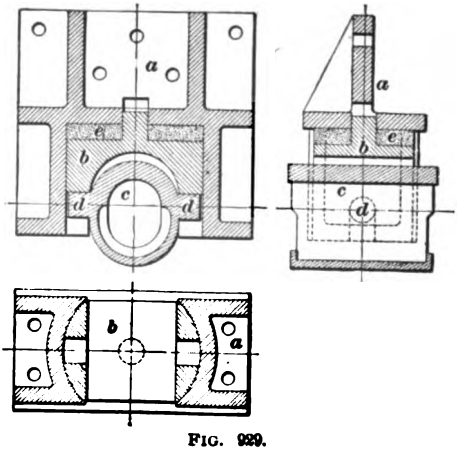

FIG. 929.

The manner of dumping a gunboat is explained under the head of dumps.

One objection that has been claimed against the use of gunboats is that, with coal, the dumping of the coal from the mine-cars into the gunboats causes more breakage and,

therefore, more culm. This, of course, would not affect their use at any of the metal mines.

They have the advantage of being attached to the rope all the time, thus saving the time necessary to hook and unhook the mine-cars.

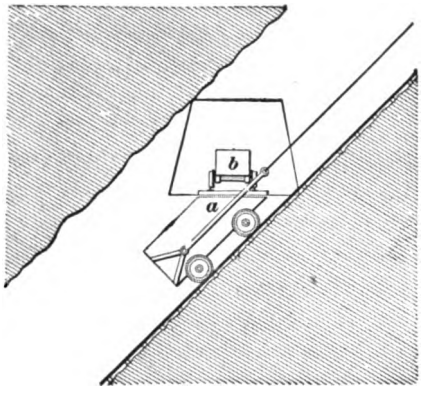

FIG. 930.

2545. Fig. 930 shows a gunboat *a* in a slope, and standing immediately below a level where there is a car *b* ready to have its load dumped into the gunboat.

ROPE CARRIERS.

INTRODUCTION.

2546. In a hoisting arrangement of the utmost simplicity, such as we would have if we used a windlass, like that shown in Fig. 888, placed directly over the hoistway, there would be no necessity for a rope carrier, for the rope could hang from the drum naturally. If, however, the drum had to be of a considerable length, or the winding edge of it had to be located anywhere but over the center of the hoistway, we would find it necessary to use **rope carriers** to guide and control the rope in its passage from the drum to this center line. This is the case in all hoists except the smallest and most primitive. In many cases the rope carriers of a hoisting plant require much study to properly design them.

A rope carrier, generally speaking, is a wheel supported in a frame so that it can revolve and allow a rope to run over it, and its use is to enable us to deflect the rope from a straight line or to keep it in a straight line against the action of gravity. Many head-frames are simply rope carriers; but

as most of them serve other purposes, we will take them up in detail under the head of tracks.

We will consider here only *sheaves* and *rollers*, which are used as rope carriers directly.

SHEAVES.

2547. Sheaves are grooved wheels used to carry or guide the hoisting rope. It was formerly a common practice to build them up with wooden arms and rim on a cast-iron hub, and many such sheaves are in use to-day. A good feature of such sheaves is their light weight, which allows them to be put in motion and stopped readily by the rope running over them; but they are not durable. Unless they are built up of many pieces, they will not keep their shape, and if they are built up of many pieces they are costly. They become soaked with oil from the rope and from the bearings in which they run, and are, therefore, a source of danger from fire. They also look clumsy, and are unmechanical.

2548. The sheaves of to-day are built entirely of iron and are of two styles—those composed entirely of cast iron,

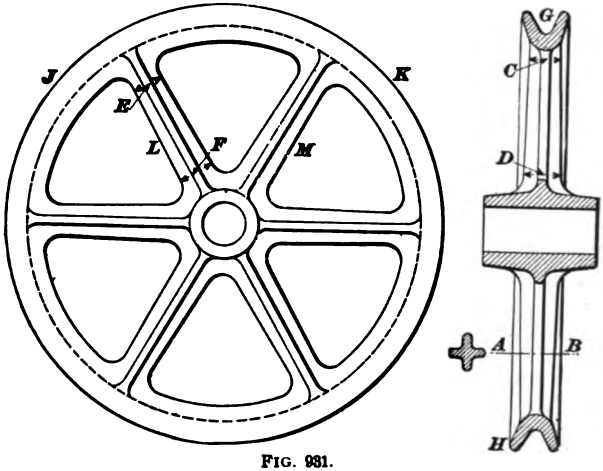

FIG. 931.

and those with cast-iron hubs and rims and wrought-iron arms, or spokes. An illustration of the first style is given

in Fig. 931. This sheave is the cheaper of the two styles, and for many purposes it is entirely satisfactory. Its great weight is an objection, because it adds to the weight on the journals, and also offers considerable resistance to being set in motion. If such a sheave is used to carry the rope in a straight line or to deflect it only a little, the pressure of contact between the rope and the sheave will be slight and, therefore, also the ability of the rope to turn the sheave. In such a case, when the rope starts or stops quickly, as it is very likely to do in modern hoisting plants, the sheave lags behind, and the consequent slipping is a great source of wear.

The arms have a cross-section as shown at *A B*, a form that is very stiff in every direction and easy to mold. They should taper in both directions; that is, dimension *C* should be less than *D*, and *E* less than *F*. This gives a lighter and more shapely wheel for the same strength. The bottom of the groove *G* in the rim should be a circular arc whose radius is a little larger than that of the rope, to allow for the angle of the rope due to its fleeting on the drum. The flanges at *H* are added to prevent the rope from jumping off if anything gets under it on the sheave.

2549. A sheave with cast-iron hub and rim and wrought-iron spokes is shown in Fig. 932. This is a very excellent

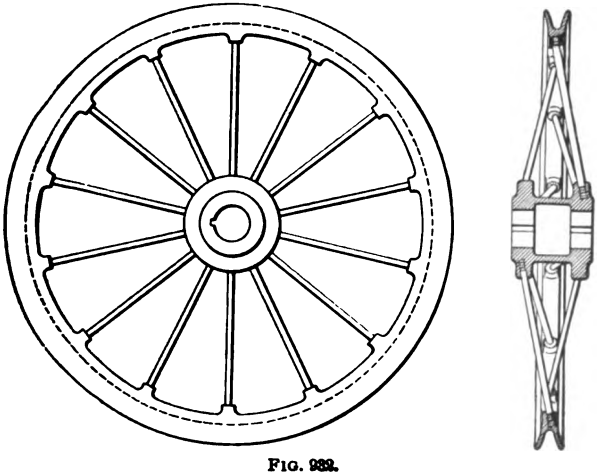

FIG. 932.

sheave, especially for the larger diameters. It is extensively used both in the United States and abroad.

The principle of construction of such a sheave is very different from that of sheaves entirely of cast iron. In the case of a sheave with cast-iron arms, the load put upon it by the rope is transmitted to the shaft by a compressive stress through those arms directly under the load. In other words, if a rope is run over the top of the sheave in Fig. 931, putting a load upon it, say from J to K, this load will be transmitted as a compressive stress through the arms L and M to the hub and the shaft. Of course, we can readily see that a part of it might be carried around the rim to the lower arms, and be supported by them in tension; but we should not consider that in designing the wheel, because cast iron is of comparatively little value in tension, whereas it is of great value in compression.

Now, in the case of a sheave with wrought-iron arms, or spokes, as shown in Fig. 932, the load would be transmitted around the rim to the side opposite its point of application, and carried from there to the hub by the tension of the adjacent spokes. In fact, the spokes all around the wheel are in tension continually from the method of construction, and the sheave is very strong and rigid. This gives a very light wheel for a required strength, and there is, consequently, little wear between it and the rope due to any slipping action when it is started or stopped. As will be seen in the sectional view of Fig. 932, the spokes are carried to the right and to the left alternately, so as to take hold of the opposite ends of the hub, thereby giving stiffness to the sheave against any side stress.

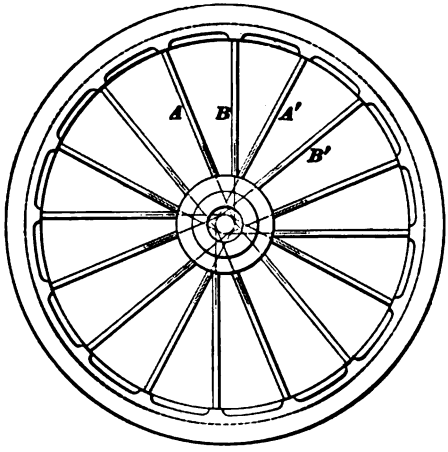

FIG. 933

Sometimes, also, the spokes are put in slightly tangential instead of radial, which method is shown in Fig. 933. In the center of the wheel there is an imaginary circle, say two inches in diameter for a 10-foot sheave, and to this circle all the spokes are tangent. Taken in pairs, made up of alternate spokes, they are made tangent to the opposite sides of the circle, so that they pull against each other, so to speak, and thereby make the sheave rigid in both directions. The alternate pairs are carried to the two ends of the hub to give lateral stiffness. In other words, spoke A is tangent to the right side of the circle, and spoke A' is tangent to the left side. These pull in opposite directions, so far as their tangential pull is concerned. Then, spoke B is tangent to the right side of the circle, and spoke B' is tangent to the left side; but this pair B and B' take hold of the lower end of the hub, while the pair A and A' take hold of the upper end. This arranges the spokes in groups of four, so the total number must be some multiple of four. The tangential direction of the spokes is often necessary in very large sheaves carrying heavy loads, because it requires a very considerable force to turn the shaft in its bearings With radial spokes, we have only their strength, or rather stiffness, considered as beams to do this turning; but with the tangential spokes we have a direct pull to do it. This is the best sheave that we have to-day.

2550. The rims of both of the above styles of sheaves are made either solid or with wooden lagging, as shown in Fig. 934, which is a section through such a rim. The left flange is a separate piece, which is centered with the sheave by the lip at A, and which is held on by bolts, as shown at B. The blocks of wood have holes bored in them for these bolts to pass through, and are held securely by the clamping together of the two flanges with the bolts. With such a sheave, there is much less wear of the rope than there is with one that has a plain cast-iron rim.

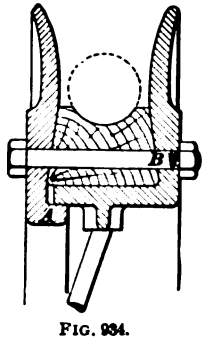

FIG. 934.

The wear of the sheave proper is also avoided, because, as the blocks wear down, they are taken out and replaced by new ones.

The size of a sheave for a given purpose depends, generally, upon the size of the rope to be used, but if the rope is simply to be carried in a straight line against the action of gravity, it may depend upon other circumstances. In such a case the usual method would be to use a roller. If the rope is required to bend over the sheave, as it is when its direction is changed, the sheave should bear some relation to the diameter of the rope. In Mine Haulage, it is stated that the minimum diameter of drum or sheave over which a wire rope having 19 or 7 wires to a strand is to be led is 60 and 100 times the diameter of the rope, respectively. But we should not use this minimum diameter unless we are compelled to, for the larger the sheave the less will be the wear of the rope due to the bending, and, consequently, the longer the life of the rope. Of course, the cost of the sheave, which necessarily increases with the size, would put a limit in the other direction.

ROLLERS, OR CARRYING SHEAVES.

2551. Rollers are used for rope carriers when the only object in view is to sustain the rope against the attraction of gravity. There is no bending of the rope in this case, except a very slight amount due to the sagging between the rollers, so the diameter of the roller is not of any importance, so far as the rope is concerned. If the rollers are for use on a slope to keep the rope from dragging on the ground, it is evident that they must be small, because the car must run over them; and mine-cars are usually made low because of restricted head-room in the mine.

Let it be understood, however, that if the rope is required to change its course from a straight line, a roller will not answer, but a sheave must be used, even if the deflection is only a small amount. We have just said that where rollers are used to carry the rope against the attraction of gravity, there is no bending of the rope, except a small amount due

to the sag. Now, this small amount of bending is not harmful, because it does not produce a stress. When the load is put upon the rope, its tendency is to take a straight line and decrease the bending. On the other hand, if the rope turns a corner or is deflected from a straight line when the load is put upon it, it tends to hug the turning sheave and to bend as sharp as the sheave will let it. Therefore, in such a case, a sheave should be used in proportion to the size of the rope.

TRACKS.

CLASSIFICATION.

2552. In all hoisting operations, except in very shallow vertical hoists, it is necessary to have some sort of a track to guide and control the car or cage during its travel. If the direction of the hoist is other than vertical, that is, if the hoistway is a slope, then the tracks are similar in most respects to those of any other haulage way where tracks are used. If the hoist is a vertical one, the tracks must be different, and they are then called **guides,** or **conductors.** In either case, it is often found advisable to change the tracks or guides into dumps at the upper ends of the hoists, which empty the car automatically. There are also located at the different landings, **keeps,** or **landing fans,** on which to rest the car while it is being loaded. We would then have under this head the following items to consider; namely, *Car tracks; Guides, or Conductors; Dumps; Landing fans, or Keeps; Head-frames.*

CAR TRACKS.

2553. Tracks such as we see on any ordinary railroad, are used to run the cars on while they are being hoisted up a slope or inclined shaft. These tracks are generally of narrower gauge and of lighter construction than most surface railways, but they are similar. They are usually of **T** rails, varying in size from the lightest pattern up to 60 lb. per yard, laid on cross-ties in the ordinary way.

When the regular mine-car is hoisted, the track must be provided with turnouts and switches, so that the cars can readily be run from the slope into the gangway or level, and *vice versa*. These gangways are generally run at right angles to the slope, and may be anywhere in the length of the slope as well as at the bottom. At the foot of a slope, or at the landing on any lift, the gangway is widened out to accommodate two tracks, one for the empty and one for the loaded cars. The empty track is generally on the upper

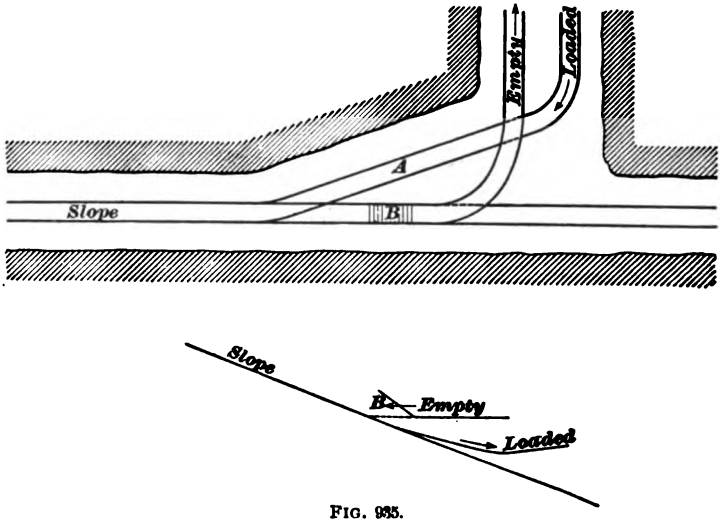

FIG. 935.

side of the gangway and the loaded track on the lower side. One method of arranging the tracks is shown in Fig. 935.

At a distance of forty or fifty feet above the gangway, the slope is widened out to accommodate the branch *A* which connects with the loaded track. It will be noticed that the tracks in the gangway are not on the same level near the slope. The empty track is kept high, so that the empty cars will run by gravity into the gangway; and the loaded track is dropped down, so that the loaded cars will run by gravity from the gangway on the branch *A* ready for hoisting. A short distance above the gangway, at *B*, a bridge or door is placed which, when down, forms part of the empty track

and switches the empty cars coming down the slope off into the gangway. This bridge or door is shown to be open in the lower part of the figure at *B*. The empty track is about six feet higer than the loaded track and is carried over it on a trestle. When this door is up, the track is continuous down the slope to a lower gangway or to the bottom. The illustration shows the plan arranged for a single slope fed from one side, or half of a double slope fed from both sides.

When hoisting is being done from this level, the bridge is down. The empty car comes down and is run off over the bridge, the car is unhooked from the rope, and the end of the rope is thrown down to the branch below, where a loaded car is standing. This car is attached to the rope, and is hoisted up the branch and through the switch to the main track.

2554. This plan can be employed economically only in thick seams, as the height necessary to allow one track to cross

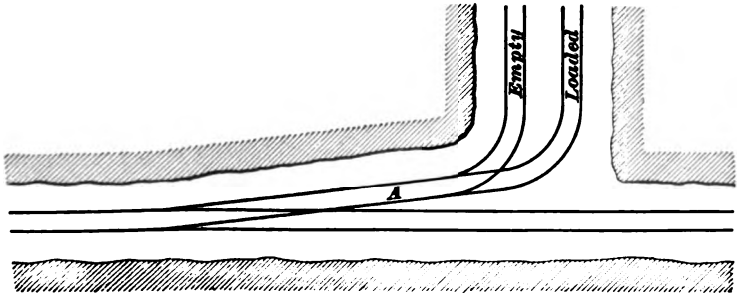

FIG. 936.

the other on a trestle can not be obtained in seams of modern thickness without taking down a large amount of top. A simpler plan, which does away with the bridge, is often used. This is shown in Fig. 936, in which the branch *A* is laid out as before, but near the point where it enters the gangway a switch is placed opening into the empty track. The disadvantage of this arrangement is that the cars can not be handled by gravity as before.

2555. A common arrangement of the tracks at the bottom of a slope is shown by Fig. 937. A branch is made by widening out the slope near the bottom, and this being a few feet higher than the main track, is used to run off the empty cars by gravity. The loaded cars run in by gravity around the curve to the foot of the slope, in position to be attached to the rope. In ascending, the loaded car forces

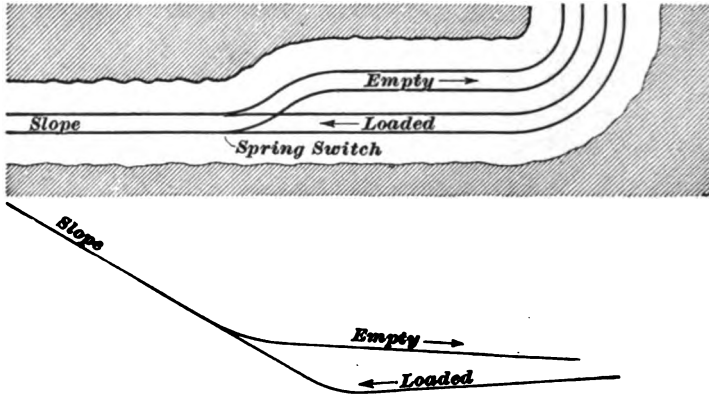

FIG. 937.

its way through the spring switch, or the switch may be set by a lever located at the foot of the slope. When the empty car descends, it runs in on the branch, where the rope is unhooked and thrown over in front of the loaded car; the car then runs around the curve into the gangway by gravity.

GUIDES, OR CONDUCTORS.

2556. **Guides,** or **conductors,** are used in all vertical shafts of any considerable depth, to serve as a track to keep the car or cage from swinging about and striking the sides of the shaft. They are made of wooden rails, iron rails, or wire ropes. In English mines, wire ropes are used to the exclusion of almost everything else, but in American mines wooden guides predominate, although some iron ones are used. Probably this difference in practice is due to the different shapes of shafts that are used in the two countries.

In English mines, the usual shape of cross-section of the hoistways is circular, while the cages are rectangular, and the same opening is used for ventilating. In such a case, the wire-rope conductors leave the shaft practically unobstructed, because they simply hang there without any bracing or tying transversely. In American mines, the usual shape of cross-section is rectangular, as is also that of the cage, and there is only a working clearance between them. Wooden guides seem more suitable in such a case.

2557. There should be three or four conductors for each cage where wire ropes are used for the purpose, because they sometimes break. If only two are used and one breaks, the remaining one can not control the cage, but will let it swing about itself. If three or four are used and one breaks, there will still be two or three left, and they will, of course, keep the cage where it belongs. In order that wire-rope conductors may give a positive guidance to the cages, they must be under tension. This is sometimes done by drawing them taut and fastening the lower end, but this is not a good method. When the rope expands with the heat, it gets slack and is useless as a conductor; and when it contracts with the cold, it either breaks itself or tears away from one of its fastenings. The best way to do is to hang a weight to the lower end large enough to give the necessary tension, and to arrange guides so that the weight can travel up and down. If the conditions at the foot of the shaft make such a plan objectionable, the rope can be secured at its lower end and have its upper end hung on one end of a lever, on the other end of which the necessary weight is applied. Of course, this weight must be large enough to counterbalance the weight of the rope and give the tension to its lower end.

2558. There is little variation in the details of wooden guides. They are always of a rectangular cross-section. In some localities, especially in Europe, where wood is not so plentiful, they vary from 5 in. × 6 in. to 6 in. × 7 in.; but in the United States, where wood is more abundant, they

are generally between 6 in. × 8 in. and 8 in. × 10 in. The kind of wood chiefly used for guides in the United States is yellow pine, but elsewhere some of the harder woods are used.

The guides for a single cage consist of two lines of rails put together in lengths ranging from 12 ft. to 16 ft., and the butts or ends of these lengths are kept in line by being seated in notches cut in the buntons for that purpose. Fig. 938 shows a plan of a cage with the guides and buntons in their normal position. The buntons are shown at *A* and *A*, and are usually timbers of 8 in. × 10 in. or 10 in. × 12 in. cross-section; *B*, *B* are the guides in section, and *C*, *C* are the cage shoes for clasping the guides and keeping the cage in line. The guides are bolted to the buntons with bolts countersunk into them so as to be clear of the shoes.

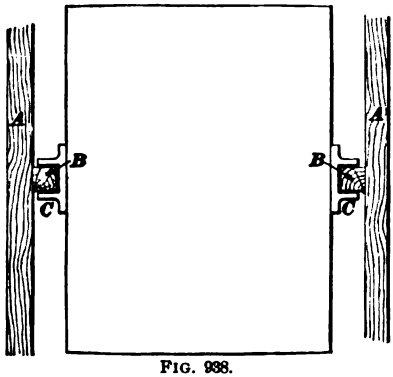

FIG. 938.

DUMPS.

2559. When gunboats, or skips, are used, the usual practice is to extend the tracks on which they run above the surface, on a head-frame, and form it into a **dump**; that is, a shape that will upset the gunboat. There is a chute to catch the material thus emptied and to conduct it into bins or elsewhere. Oftentimes, a shaft-house or head-house is built about the head-frame in which to store the material, or to prepare it for market or further handling.

These dumps are of different designs in different localities. In the Lake Superior copper region, we find many of them built as shown in Fig. 939. In this dump the rails of the main track are bent down around a smooth curve, as at *A*. At a short distance back of the commencement of this vertical curve, another track begins and runs into a straight line parallel to the angle of the hoist. This second track is of a

wider gauge than the first one, is at a higher level, and its rails are of a heavy angle-iron, as shown in section through *B B*. On the left-hand side of this section, one of the front wheels is shown, and on the right-hand side, one of the back or dumping wheels, which has a second tread of less diameter than the main tread. The second track is made of a wide gauge, in order to let the front wheels and the

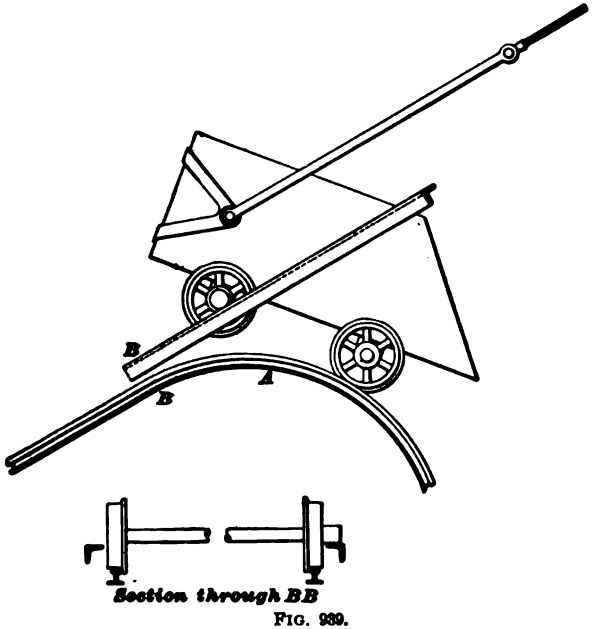

FIG. 939.

entire skip pass through it in dumping. It is raised a little above the main track, so as to reach the small tread of the dumping wheel, which runs on it. By making the dumping tread of a smaller diameter than the main tread, the latter acts as an inside flange to keep the skip from running off the track. Now, when the skip comes up, the front wheels continue on the main track, running over to the curve *A* and down, while the dumping wheels run up on the second or outside track, thus turning the skip over. If there is any overhauling beyond the point necessary to empty the skip, it will simply run along on the upper track on the two

back wheels, hanging front end down. In actual practice, this occurs at almost every hoist, and is not found to be objectionable.

The principle of action of most dumps is the same as that of the one just described, the sizes and proportions differing with the size of the skip and the angle of the slope.

LANDING FANS, OR KEEPS.

2560. At most mine openings, whether vertical or inclined, a mechanism is placed at the top, or mouth, to rest the cage upon while the cars are being changed. These are called **landing fans,** or **keeps.** A common form is shown in Fig. 940, in which *A* and *A* are a pair of cast-iron arms,

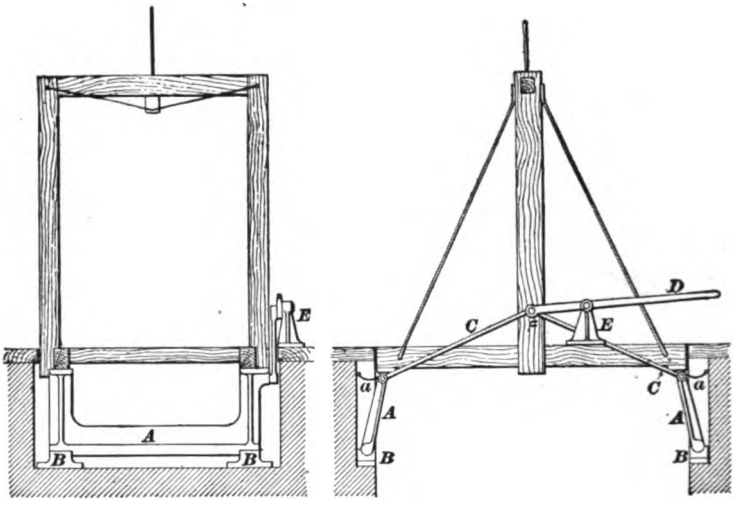

FIG. 940.

or struts, located one at each end of the cage. They rest in bearings *B*, *B* bolted to the shaft timbers, and can stand in a vertical position, entirely free of the shaft, or extend out into the shaft and under the cage, as shown. At their upper end there is an eye-bolt, corresponding to another one opposite in the timber, and between these a chain *a* is put as a safeguard to prevent the keeps from leaning out into the shaft too far or from falling into the shaft

if anything goes wrong. At the upper end of each keep there is also a pin, which extends to the side key and the line of the cage, and from these pins connections C and C extend to the center and upwards, as shown, to another pin. This last pin is carried by the end of a hand-lever D with a fulcrum at E on the floor of the landing. Now, it will be seen that if the outer end of the hand-lever is raised, the inner end will drop, and thus, through the connections C and C, force the keeps out from under the cage into the pockets in the timbering arranged for them. The cage has four cast-iron shoes with projections under it to receive the keeps, to take the wear from them, and to prevent them from swinging too far into the shaft. It should be noticed, also, that the insides of the keeps have no projections, and the operating mechanism is such that no harm would come if the keeps were left in the shaft by mistake and a hoist were made. The cage would open out the keeps and pass through them without any trouble. This is a requisite of good keeps.

2561. Most keeps that we find in use are built on the same principle as those just described, although the details of their construction may vary. An objection that can be raised against them is that, with large cages and heavy loads, the jar caused by letting the cage down on such a rigid support is very detrimental. One scheme that has been used successfully to overcome this trouble is to make the keeps of hydraulic cylinders, with plungers for the cage to rest upon. Such a keep is shown in Fig. 941. The cylinder has at its lower end an eye, about which it can turn on a pin, so as to close back into a recess in the shaft, out of the way of the cage, or extend out into the shaft under the cage. It is shown in this last position, and its operation is as follows: Suppose the cage, which rests in the jaw at A, has

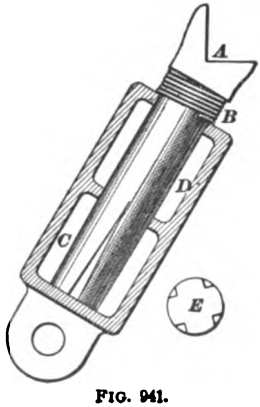

FIG. 941.

just been lifted away. The spring at *B*, which is long and strong enough to push the plunger out the desired distance, then does this, and the plunger is ready to receive the cage again. When the cage settles down, it tends to push the plunger home again into the position in which it is shown in the figure. This action is resisted by water or, preferably, oil in the cylinder at *C*. At first this resistance is very slight, however, because V-shaped grooves have been cut in the plunger, as shown at *E*, and the oil can escape through these into the upper chamber *D*. As will be seen in the figure, the V grooves, which are of considerable size, at the end of the plunger, taper down to nothing, so the flow of oil through them becomes less and less until none can pass except by leakage around the plunger. This allows the plunger with its load to settle quietly to the bottom.

Landing fans are also used for slope cages in some cases, and may be of substantially the same design as those shown for shaft cages.

HEAD-FRAMES.

2562. A **head-frame** is a frame or structure built at the mouth or opening of a mine, primarily, to carry the head sheave over which the rope is conducted from the mine to the hoisting-engines. It almost universally, however, carries the track that the car runs on or the guides for cages, and we therefore class it under the general head of Tracks.

2563. In Fig. 942 is shown a head-frame in its simplest form without tracks or guides. The drum of the hoisting-engines is shown at *A*, with the rope coming from its upper side and running over the head sheave *B* down to the cage *C*. The head sheave is supported by the head-frame *D*. If we assume that the angles *E* and *F* that the two portions of the rope make with the horizontal are equal, the resultant stress on the head sheave will be vertical. We arrive at this conclusion through the principle of the parallelogram of forces. If two forces acting on a point be represented in direction and intensity by adjacent sides of

a parallelogram, their resultant will be represented by that diagonal of the parallelogram which passes through the

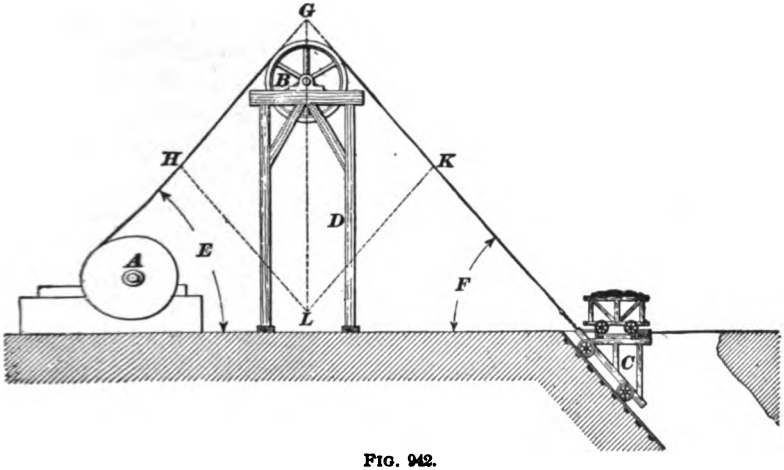

FIG. 942.

point. That is to say, if $G\,H$ and $G\,K$, Fig. 943, represent the directions and amounts of two forces acting upon

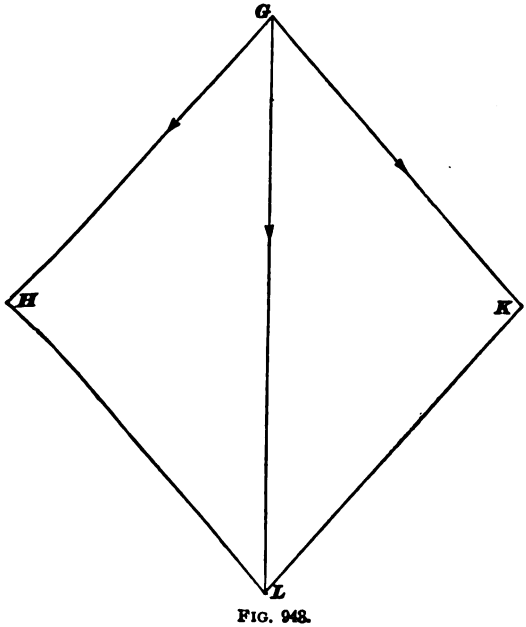

FIG. 943.

the point G, we find the resultant of these forces, or the force which would be equivalent in effect to their combined effort, by constructing the parallelogram $G\,K\,L\,H$ and drawing the diagonal $G\,L$ through G. This diagonal, then, represents in direction and intensity the resultant sought. Suppose the forces $G\,H$ and $G\,K$ are equal and amount to 20,000 lb. each, and suppose we lay off these forces with a scale representing 1,000 lb. per one-tenth of an inch. Then, the lines $G\,H$ and $G\,K$ should each be two inches long, and the line $G\,L$, which in this case measures three inches, or 30-tenths of an inch, would represent 30,000 lb. Going back now to Fig. 942, we see this operation applied to our head-frame. We have extended the rope lines to the point of intersection G, and from there have laid off the two lines $G\,H$ and $G\,K$, each one inch long, thus representing the pull of the rope, say 20,000 lb., to a scale of 2,000 lb. to one-tenth of an inch. Completing the parallelogram by drawing $H\,L$ parallel to $G\,K$ and $K\,L$ parallel to $G\,H$, and drawing the diagonal $G\,L$, we have the direction and amount of the force acting upon the head-frame in consequence of the deflection of the rope by it, while the rope is under that tension.

On measuring the diagonal, it is found to be $1\frac{1}{2}$ in. long, and as there are fifteen one-tenths in $1\frac{1}{2}$ in., and since, according to the scale we are using, each tenth equals 2,000 lb.; $2{,}000 \times 15 = 30{,}000$ lb. = the vertical stress on the head-frame. We also see from the figure that the direction of this force is vertical.

2564. Let us suppose now that we have to deal with a shaft instead of a slope, that is, with a vertical instead of an inclined hoistway. We have a representation of such a case in Fig. 944, in which, as before, A is the drum, B the head sheave, C the cage, and D the head-frame. The head-frame now has an element that it did not have before; that is, the diagonal member M. Why has this been added, and how shall we determine its location? The parallelogram of forces will answer both of these questions for us. As before, we extend the lines of the rope, which

are, of course, the lines of force with which we are dealing, until they intersect at *G*. From this point, lay off on these lines distances representing the stresses in the rope to any scale. For simplicity's sake, assume that the stress is 20,000 pounds, as before, and use one-tenth of an inch per 2,000 pounds for a scale. We will then have *G H* and *G K*, each one inch long, on laying off our forces. Completing the parallelogram by drawing *H L* parallel to *G K* and *K L* parallel to *G H*, and drawing the diagonal *G L* through *G*, we find that the resultant is 38,000 pounds, because *G L* is 1.9 inches long. The direction of the resultant is also determined, being in the line of the diagonal *G L*. Now, it will be seen that if we had used a head-frame for this case such as is shown in Fig. 942, it would have been overturned by this resultant force, so we added the new member *M* to resist that action. In all cases, then, it must be made certain that the resultant of all the forces acting on the head-frame shall fall within the structure.

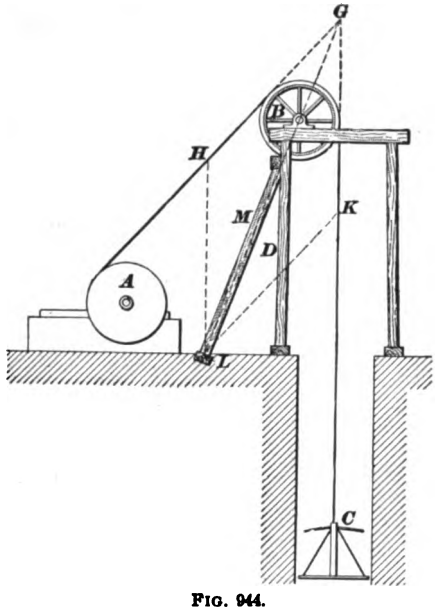

FIG. 944.

2565. So far, we have had in mind head-frames that were to be built of wood, but many of them are now built of iron or steel. These may follow the same lines as laid down in the foregoing pages, but they may also follow another line. Suppose, for instance, that we have a case such as is shown in Fig. 945, where, for some local reason, we

find it impossible to put a strut in or near the line of the resultant stress on the head-frame. This stress, then, has a component which tends to turn the head-frame over, and if it had only its weight to keep it in place, that might be the

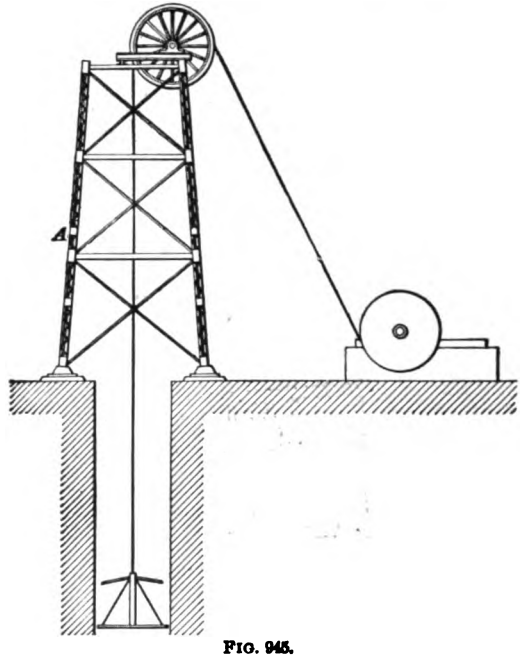

FIG. 945.

result. Now, in iron or steel structures, we can very easily make *A* a tension member and anchor the lower end of it to a heavy masonry foundation. This resists the tendency to overturn and makes a very stable structure. A head-frame similar to this is shown more in detail in Fig. 946.

THE NEW YORK
PUBLIC LIBRARY

ASTOR, LENOX
TILDEN FOUNDATIONS

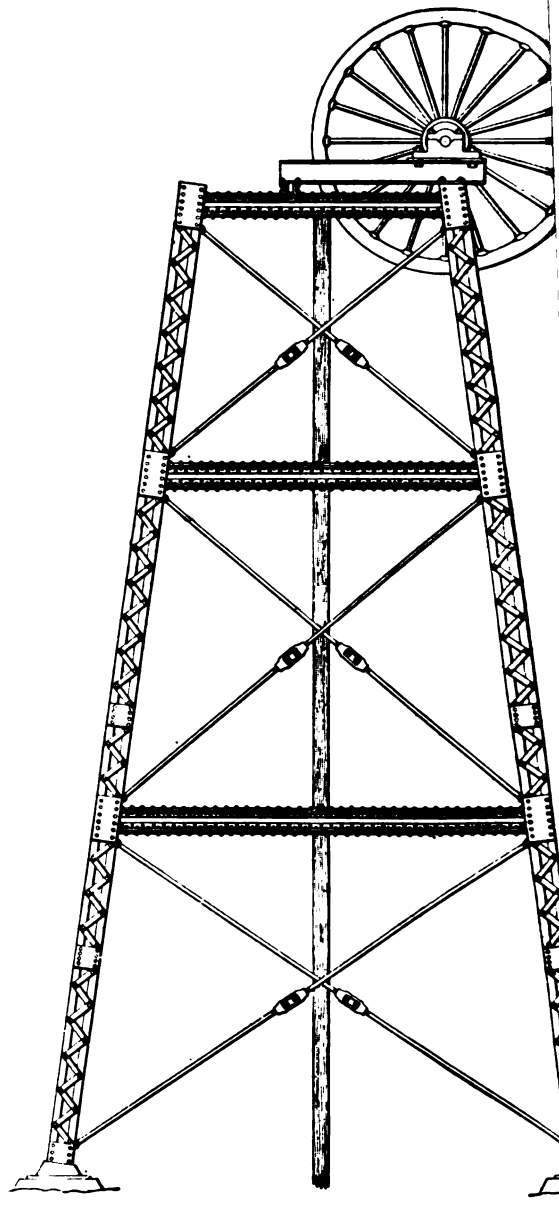

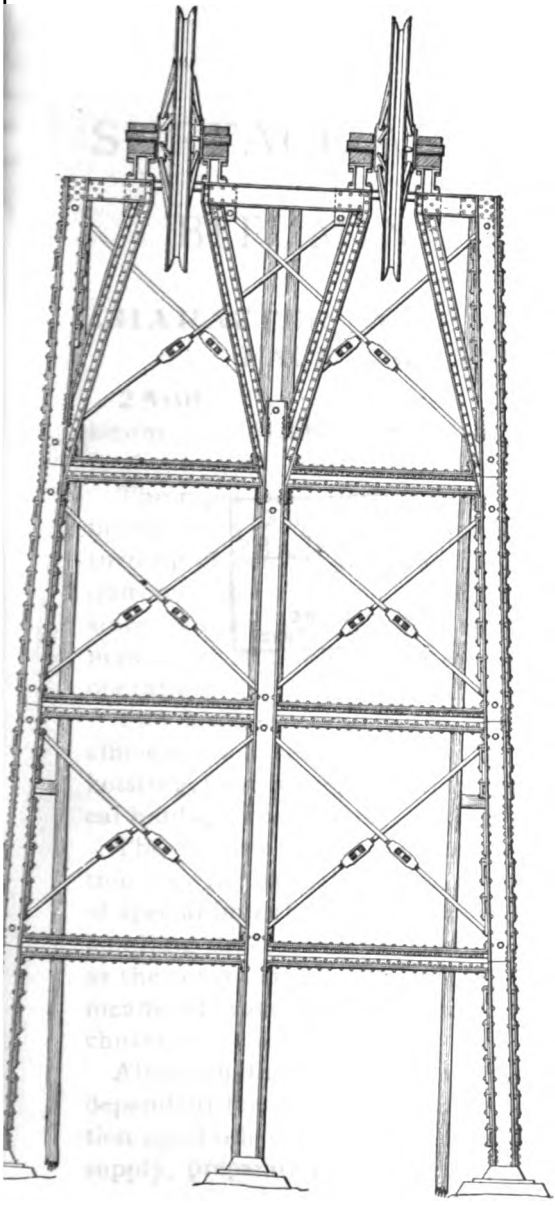

THE NEW YORK
PUBLIC LIBRARY

ASTOR, LENOX
TILDEN FOUNDATIONS

SURFACE ARRANGEMENTS OF BITUMINOUS MINES.

CHARACTER AND EXTENT OF SURFACE ARRANGEMENTS.

2566. The arrangement of the surface works of a bituminous coal-mine should be considered with regard to facilitating the operations inside as well as outside.

The rapid and economical handling of the coal when it is in readiness to be removed from the mine, the prompt returning of empty cars, and the supplying of the inside requirements of the mine should be kept constantly in view, since on the promptness and economy with which these demands are met will depend the capacity and profits of the operations.

The inside operations are directly dependent upon the efficiency and relation of the outside arrangements for the hoisting, ventilating, pumping, and possibly for the mechanical haulage, coal cutting, etc.

The relation of the surface works to the outside operations, as far as their general arrangement is concerned, is of special importance. On this will depend the efficiency in handling the coal and material to and from the mine, as well as the return of empty cars. This efficiency is secured by means of cars, landings, tracks, trestles, scales, tipples, chutes, screens, etc.

Although these are of immediate importance, they are dependent for their maintenance and continuance in operation upon other outside arrangements, as shops, sources of supply, preparation of material, facilities for shipments, etc.

For notice of the copyright, see page immediately following the title page.

2567. The arrangement of the surface works of a mine, as regards magnitude, design, and disposition, will depend upon the location, daily output, and nature of the operations, as well as the life thereof.

In some instances, the territory to be operated on is very small, with coal at shallow depths, and possibly subject to an increasing inflow of water with the breakage of the roof, so that the outside arrangements should be constructed with the view of moving them bodily to a new location with the least possible dismantling of buildings and structures. An example of this is furnished in the Braidwood region, Illinois, where, after mining the coal in 160 acres—by circular long-wall work, at depths of 100 ft.—the buildings, head-frame, etc., are moved on trucks to the center of another 160-acre tract.

2568. The design of the surface works will depend upon whether the coal is to be loaded on railroad-cars, boats, or dumped into bins for coke-ovens, or whether the coal is to be stored, on account of irregular shipment.

The method of mining, the amount of rock to be handled, and whether the coal is to be screened, picked, or washed, will also influence the surface arrangements.

The thickness of the seam and nature of its roof govern the use of large or small cars. These, with the arrangements for hoisting one or more cars at a time, influence the arrangement of the landings, their length, width, and the gauge of the tracks.

The nature of the labor employed or the possible output per miner, due to difficult mining, may make necessary such a large force of men, or such frequent changing of shifts, as to render it necessary to have an independent opening at a shaft mine for the lowering and hoisting of men, so as not to interfere with the hoisting of coal. In most regions a second opening is required by law.

If much rock is to be hoisted from the mine, or much timber and material is to be lowered, a second opening for the work may be necessary.

2569. The arrangement of the surface works will be influenced by the number and location of the mine openings. If the hoisting, ventilation, and pumping are to be performed through one opening divided into compartments, the arrangement of the plant around these openings should be carefully planned.

If there are two openings, the hoisting should be done at one and the ventilation at the other. The pumping may be done through either opening, although in the case of a rod or Cornish pump being used, its location in a compartment of the hoisting shaft is preferable, unless there is an independent opening or bore-hole for pumping.

The location of the plant on the surface should be carefully considered with relation to existing or proposed openings for conducting underground the ropes for haulage, or compressed-air pipes, or electric wire for motors, coal cutting, or pumping.

A mine may be opened with many of the surface arrangements of a temporary character, with the view of more permanent improvements, provided the life of the mine will permit. This plan is preferable if it is impossible to determine what the future requirements of the mine will be.

It is important that the few permanent features of such a plant be carefully planned, for, when once made, they must stand. If they are poorly planned, their inefficiency can not be entirely remedied. Some dependent portions of the operations will generally necessitate the continuance of some parts of the old work.

2570. In order to better understand the features in the surface arrangements, which will vary according to the nature of the opening, they can be best considered under the conditions of mines opened as follows:

1. By a shaft.

2. By an opening at a lower level than the dumping platform, necessitating a slope hoist. This will generally be a slope mine, although the coal from a drift or other opening may have to be hoisted by a plane before finally

reaching the dumping platform and surrounding surface works.

3. By a drift opened on a level with the dumping platform or at a point from which cars can run by gravity thereto.

4. By an opening in the mountain-side where cars can be lowered to the tipple by a gravity plane.

In each of these cases the details of the arrangements may vary in a few important points, owing to different conditions.

These particular conditions will be considered under each of the heads referred to.

Surface arrangements will be described to meet all the various requirements. They can be modified for operations where the outside requirements are few and simple.

SURFACE ARRANGEMENTS AT A SHAFT MINE.

GENERAL PLANS.

2571. The principal points in which mines opened by shafts differ from mines opened otherwise are as follows:

1. In the requirement of a head-frame for the vertical hoisting and landing of the loads, generally in single cars, requiring continuous and rapid hoisting.

2. The location of the engines with reference to the head-frame and shaft, which is generally on line therewith and only a short distance away.

3. In the arrangement of the tracks at the landings, and of those leading to the dumping points and to the yard.

4. Provision for lowering and hoisting men and the handling of material up and down the shaft, especially large timbers, rails, and machinery, also mules and feed.

5. Arrangement of ventilating, pumping, or haulage plants near a compartment of the hoisting shaft, or at an isolated opening.

2572. There are two cases in the surface arrangements of shaft mines, as follows:

THE NEW YORK
PUBLIC LIBRARY

ASTOR, LENOX
TILDEN FOUNDATIONS

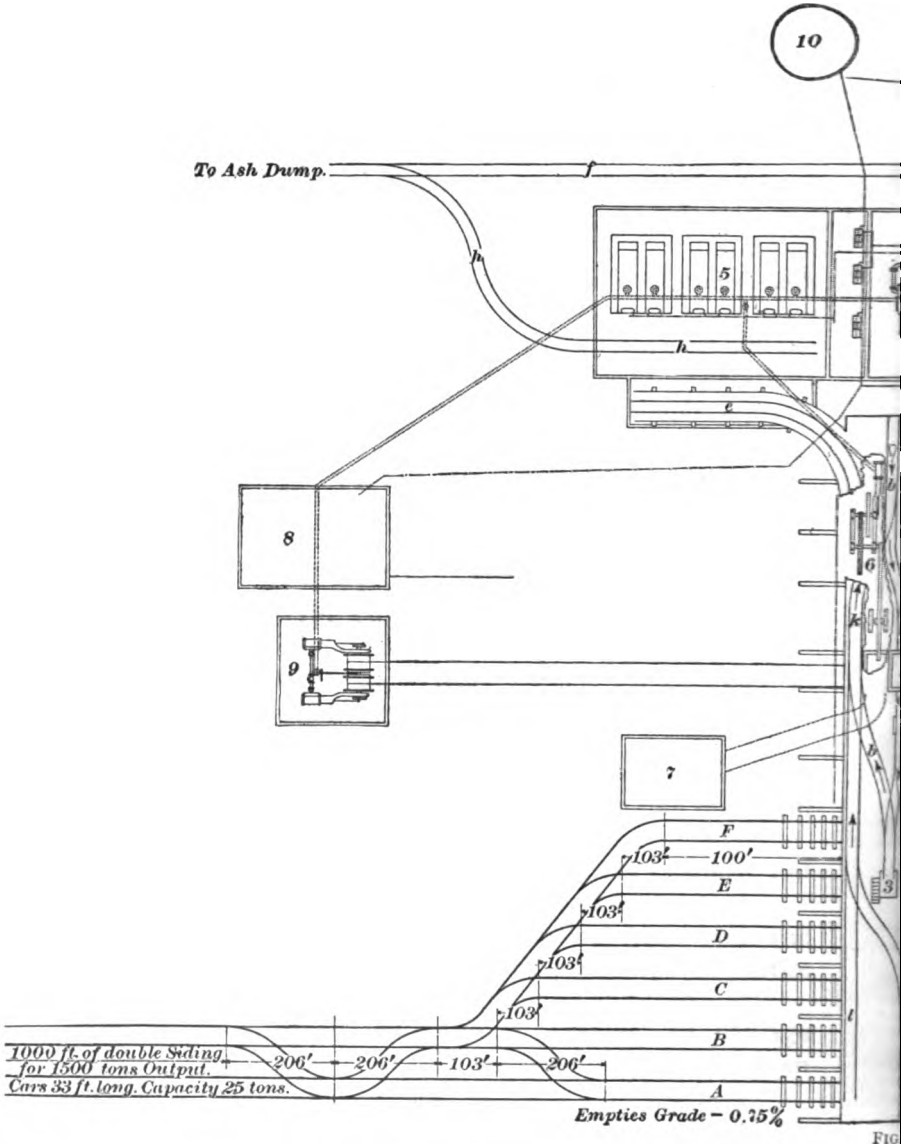
10
To Ash Dump.
f
h
5
h
e
8
9
7
F
103'
100'
E
103'
D
103'
C
103'
B
1000 ft. of double Siding for 1500 tons Output.
Cars 33 ft. long. Capacity 25 tons.
206'
206'
103'
206'
A
Empties Grade – 0.75%

FIG

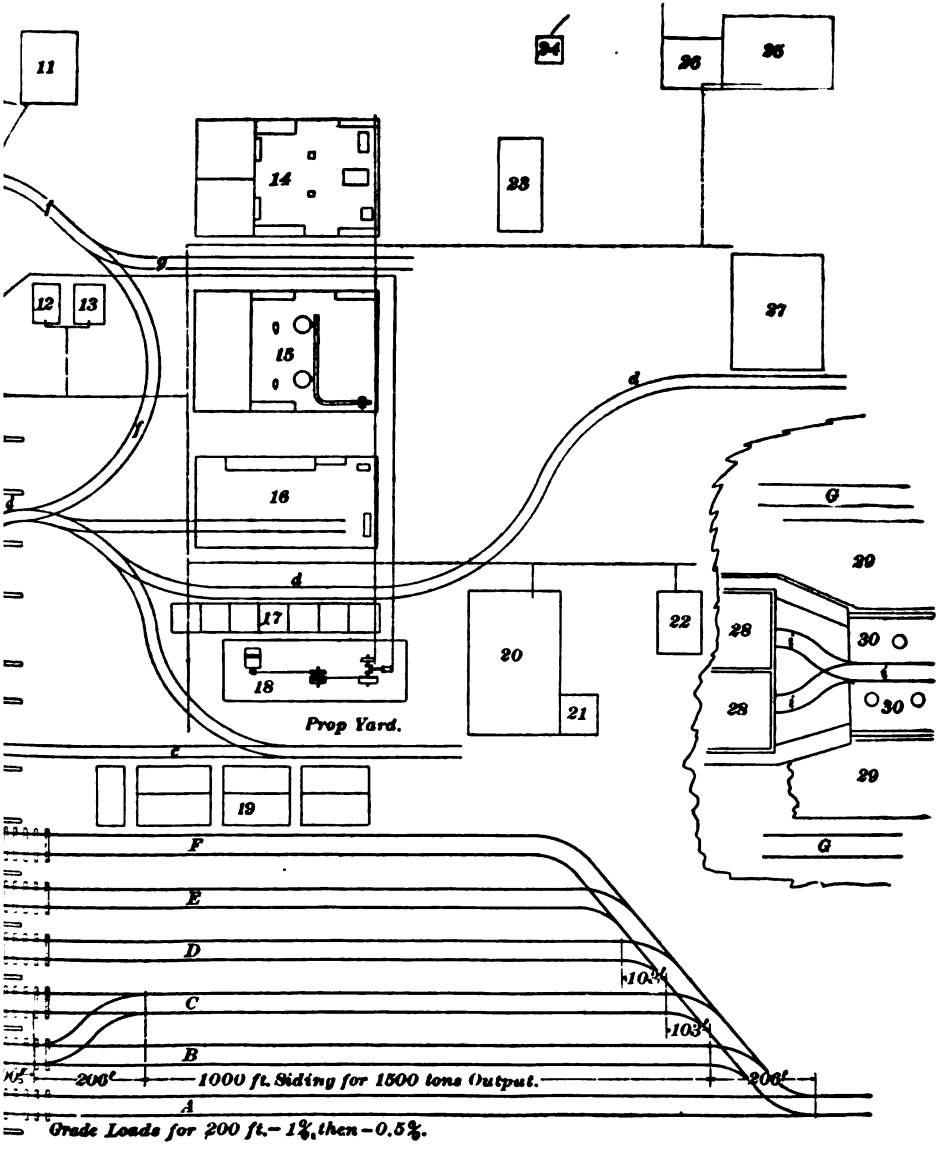
11
24
26
25
14
23
27
12
13
15
16
17
18
Prop Yard.
19
20
21
22
28
28
30
30
29
29
G
G
F
E
D
C
B
A
103'
103'
200'
200'
1000 ft. Siding for 1500 tons Output.
Grade Loads for 200 ft. – 1%, then – 0.5%.

NEW YORK
LIBRARY
LENOX
FOUNDATIONS

Case I.—In this case there is one landing on a trestle leading to the tipple, and another at the yard level leading to the shops, timber-yard, etc. A general arrangement of this case is shown in Fig. 947.

This arrangement is the more common one for shaft mines, and is adopted where the ground in the neighborhood of the mine opening and the dumping point is level, or nearly so, and the two are not far apart.

2573. By referring to the plan, Fig. 947, it will be seen that the center lines of the hoisting-engine *4*, the shaft *1*, and the tipples *3* are the same. The boiler room *5* is located near the hoisting-engines, with a room between for feed-pumps and the fire-pump. The coal-bin for boiler supply is located in front of the boiler room. To the left of the shaft, and on a level with the surface, is shown the Cornish or bull pump *6*. The fan house *7*, shown on the left of the tipple, is intended for a fan to be used in case of accident to the regular fan at the air-shaft, which may be several hundred yards away. The dotted lines leading from the fan house to the shaft are intended to show the underground connection of the fan with the air compartment of the hoisting shaft. The two remaining buildings on the left of the tipple are the compressed-air or electrical plant *8* and the rope-haulage engine-house *9*. From the former the air-pipe or electrical conductors are taken into the mine through the air compartment of the shaft. From the latter the ropes run underground in wooden conduits to the shaft, and reach the workings through the air compartment of the shaft.

The tank for the water-supply *10* is shown back of the boilers, with service-pipes leading from it to the boiler feed-pumps, the compressor plant, the wash-house *11*, to all other buildings on the right of the tipple, and to the coke-ovens *30*. The mine office *12* and lamp house *13* are shown near the shaft and hoisting-engine house. The machine-shop *14*, blacksmith shop *15*, carpenter shop *16*, sawed-lumber yard *17*, saw shed *18*, and the timber and rail yard

19 are arranged almost in line and near the shaft. The machine-shop *14* has two rooms cut off from the main room, one for the storage of special fittings and the other for the head machinist's office. Besides the usual small tools, the machine-shop should be supplied with a punch machine, a drilling-machine, a lathe, a planer, and an emery-wheel. The necessary benches and closets should be built in where most convenient. The blacksmith-shop *15* should have a room on the side next the shaft for tools, and racks for picks needing sharpening and those sharpened. It should have two anvils, two forges, and a blower, and the usual complement of benches, closets, sledges, hammers, files, tongs, etc., etc.

The carpenter shop *16* should be so built that a track for crippled mine-cars can be run in one side of it. It should adjoin the blacksmith shop and be near the shaft, tipple, and sawed-lumber yard. Besides the work-bench, closet, bins for nails, etc., it should be supplied with a grindstone and a wood-turning lathe. The sawmill *18* and the sawed-lumber yard *17* should be located as convenient to the various shops as possible. In this case, the arrangement is all that could be desired, and the locations of the buildings are such that the problem of furnishing power from the sawmill engine to the machine tools in each shop is a simple one, and is solved by a straight line of shafting. The storage house for iron and pipe *23* is close to the machine and blacksmith shops, as it should be. The supply house *20*, supply-clerk's office *21*, and the oil house *22* are located in close proximity to each other, and near the shaft and shops. The stables *25*, harness and wagon house *26*, and the hay and feed storehouse *27* are another group of buildings that should be close together and convenient to the shaft. The powder house *24* should not be nearer any other building than 1,000 ft. The arrow attached to the building shown on plan indicates the approximate direction from other buildings for its location. The coal-bins for coke ovens *28*, the ovens themselves *30*, and the coke-wharves *29* are of necessity shown on the plan very near the other buildings. The bins *28* may be either at the tipple or at the head of the line of

ovens, about 300 ft. away from the shaft. They should be so constructed that the larries can run under the chutes and thence to the coke-ovens. The wharves *29* should be so arranged as to permit of the convenient drawing of coke, with some room for storage, and of such a height above the coke-car tracks as to permit of the easy loading of coke into the coke cars.

2574. The mine-car tracks on the surface are so arranged as to permit of the most convenient handling of both loaded and empty cars, to and from all necessary points on the surface. Tracks *a* are those on which the loaded cars run from the cage, over the scales *2* to the tipples *3*. The empty cars return to the cage by running around either side of the shaft on tracks *b*, and are back-switched onto the cages. All these tracks are arranged, by means of automatic hoists in the empty tracks at *k*, so that the cars are run automatically from the cages to the tipple, and thence back to the cages. Track *l*, on the platform in front of the tipple, is for the storage of cars of dirty coal until such a time as they can be picked over. Track *m* is for cars that need slight repairs, and which can be conveniently repaired without running them to the shops. Track *o* is for cars of rock, which are run across the railroad-tracks on the platform on the trestle, and are dumped in a convenient place. The arrangement of these tracks and the methods of handling the cars, in connection with the track *e* for coal to boilers, can be readily understood by referring to the plan.

The arrangement of the tracks on the surface is such as to enable timber, supplies, etc., to be taken into the mine speedily and conveniently. Track *c* running alongside the timber and rail yard *19* is used for conveying heavy timbers and rails to the shaft. Track *d*, which runs from the surface landing of the shaft to the hay and feed storehouse *27*, is for conveying sawed lumber from the lumber-yard *17* and feed from the feed storehouse *27* to the shaft. A short piece of track connects track *c* with track *d*, so that mine-cars can be loaded with props, ties, laggings, etc., and

be run onto the cage at the surface landing. There is also a short branch track run off from track *d*, which enters the carpenter shop *16*. This track is used to run crippled cars to the shop and new cars from the shop to the shaft. Track *h*, which runs from the front of the boilers *5* to the ash dump, is used exclusively for the removal of ashes. Track *f*, which runs from a point on track *h* back of the boilers *5* and hoisting-engine *4* and connects with track *d*, is used to take ashes into the mine for road ballast, etc. A short branch track *g* is run off this track to the machine-shop, so that heavy pieces of machinery destined for use inside may be conveyed to the shaft on trucks, or if used outside they can be conveyed in the same manner to almost any part of the plant. The water-main from the source of supply may enter the tank *10* from any direction. The water-supply pipes from the tank to various parts of the works are shown by broken lines, thus — — — —. The steam-pipes from the boilers are shown by dotted lines, thus .....

In studying this plan, the student should remember that it is for a large colliery, and that it is an ideal plan, and, therefore, is subject to many modifications. It is given simply as a general guide in laying out the surface plant.

If the coal mined is used for coke-ovens, the larry track from the coal-bins to the oven should be arranged as shown at *i*.

2575. The railroad-tracks for shipping purposes are shown on plan as follows: *A* is the empty shifting track, *B* the lump-coal track, *C* the nut-coal track, *D* the pea-coal track, *E* the slack-coal track, *F* the material track, on which supplies and machinery are received, and *G* the coke-car tracks. The curves at the switches in the shipping tracks are necessarily distorted. They should be 7° 30′ curves, and the frogs used should be what are designated as No. 8 frogs. But these are points that are decided by the engineers of the railroad company.

This arrangement is preferable to that in Case II, for the following reasons;

First.—The dumping point being nearer the other surface works, the operations are more concentrated, and, therefore, more readily supervised, and they are nearer the center of repairs and supplies.

Second.—The location of the storehouses and material and timber yards can be arranged conveniently to the railroad-tracks as well as to the mine, so as to require very little handling of material.

2576. Case II.—In this case there is only one landing, and that on the natural ground, the dumping point being some distance from the shaft.

The arrangement of the surface works and the tracks leading thereto will vary slightly, due to their having the same shaft landing as the cars to and from the mine. A suitable arrangement is shown in Fig. 948.

This arrangement may be made necessary by certain conditions in mining requiring a shaft location at a higher point than the level of the tipple dump, and sufficiently high for the necessary elevation of the tipple above railroad-cars.

2577. The principal features in this arrangement, as compared with Case I, are:

1. The head-frame is not so high, which is an advantage.
2. The engine will be nearer the shaft, which may be a disadvantage if more room around the shaft is needed.
3. The arrangement with one landing facilitates the handling of empty cars, material, etc., between the yard and the mine, although the arrangement of tracks may involve more turnouts, crossings, etc.
4. If supplies, lumber, machinery, etc., are received in large quantities by railroad, they will require considerable handling to bring them to the yard level. This may be effected by a wagon road, or, if the circumstances warrant, by an inclined track, up which the railroad-cars can be hoisted by a rope, as shown in Fig. 948, at *F*.

For this purpose the best plan of locating and grading an inclined track should be studied, in order that, in the

arrangement of the surface works, means can be provided for hoisting cars of material from the railroad-tracks below. Or, if railroad-cars of material are not to be hoisted, then a track can be laid for hoisting smaller cars which will come close enough to the railroad-track to transfer the material to be hoisted.

2578. Great importance is attached to the proper design, arrangement, and construction of the head-frame, for when once erected and the related structures have assumed permanent form, its alteration is a serious matter, especially if it involves a change in the surroundings. Therefore, the many points bearing thereon will be dwelt on in some detail, as will also the arrangement of the landings, trestles, tracks, and how the coal is to be handled at the tipple. The arrangement of chutes, screens, and whether the coal is to be picked, washed, or stored in bins, should be fully considered, so that the main outlines may be correct, and the proper height for dumping and sufficient distance between the shaft and railroad-tracks, or dumping points, may be secured.

2579. By referring to Fig. 948, it will be seen that the same general plan of concentrating the plant has been followed as in Fig. 947, but the locations of the improvements are somewhat different. In this figure, the shaft is shown at *1*, the scales at *2*, the tipples at *3*, the hoisting-engine at *4*, the main boilers at *5*, the Cornish or bull pump at *6*, the fan (in this case an isolated ventilating plant) at *7*, the boilers for the isolated fan at *34*, the air-compressor, or electric plant, at *8*, the underground haulage engines at *9*, and if the haulage plant is located away from the main shaft and the ropes conveyed into the mine through another shaft, or through bore holes, a boiler plant *33* is erected close by. The tank is shown at *10*, the wash-house at *11*, the mine office at *12*, the lamp house at *13*, the machine-shop at *14*, the blacksmith shop at *15*, the carpenter shop at *16*, the sawed-lumber yard at *17*, the sawmill at *18*, the timber and rail yard at *19*, the supply house, with supply-clerk's

office, at *20*, the oil house at *22*, the iron and pipe shed at *23*, and the isolated powder house (in general direction) at *24*. The stable *25*, harness and wagon shed *26*, and the hay and feed storehouse *27* are shown in close proximity to each other. The coal-bins for coking coal are shown at *28*, the coke wharf at *29*, and the line of coke-ovens at *30*. The check-clerk's office is shown at *31* and the weighman's office at *32*.

The mine-car tracks are arranged, as in Fig. 947, so as to make it possible to reach all parts of the plant with cars or trucks. Track *a* is the loaded track, passing over the scales *2* to the tipple *3*. Track *b* is the empty track, over which the empty cars run by gravity from the tipple to the mechanical hoist at *k*. Here they are raised so as to run by gravity to hoist *k'*, and thence they run to the shaft. The rock cars from the shaft are run to the rock dump over track *o*, and the cars of dirty coal are run on the track *l*. The heavy timber and rails are taken to the shaft from the yard *19* over the track *c*, and the sawed lumber is taken from the yard *17* to the shaft, tipple, or shops over track *d*. The cars to the shops and the coal to the main boilers are run over track *e*. The ashes from the main boilers are run over track *h* to the dump, or over track *f* to the shaft. Feed and hay are taken to the shaft from the hay and feed storehouse *27* over track *t*. This same track answers for supplies from the supply house *20*. Machinery taken to and from the machine-shop is hauled over track *c*. Track *u* on the tipple platform is for empty rock cars, and track *s* is for cars needing slight repairs. Coal for the isolated steam plants at the fan and haulage engines is transported over tracks running off from the main system at the most accessible points. The larry tracks to the coke-ovens are shown at *i*.

The coal-bins for coke-oven supply may be connected with the main tipple, or they may be some distance away, but with proper arrangement of height to run the mine-cars conveniently to the dumps located therein.

The shipping tracks are as follows: *A*, empty shifting

track; *B*, lump-coal track; *C*, nut-coal track; *D*, pea-coal track, and *G*, coke-car track. Coke-ovens may also be located on the opposite side of the railroad-tracks from the tipple, as at *36*.

The water-supply pipes from the tank are shown thus ——·——·——·——. The steam-pipes thus - - - - - - - - , and the rope for the inclined plane, in the material track *F* (worked by the sawmill engine), is shown thus ——··——·· ——·—.

THE HEAD-FRAME.

2580. The head-frame is for the support of the head sheaves, or wheels, over which the hoisting ropes are led from the hoisting-engine, located at some distance from the shaft, and for lowering, raising, and landing the cages.

Fig. 949 shows a general outline of a head-frame built of timber, and Fig. 950 shows a general form for one built of iron or steel.

The head-frame consists of an upright part sufficiently strong to support the load to be hoisted, whose weight is transmitted to the structure through the rope to the head wheel *C*, which may have a bearing directly over the upright posts, or the bearing may be on a stringer, or girder, spanning the shaft-way, and resting on posts on both sides of the shaft.

The posts *B* may be inclined in the direction of the length of the shaft, if necessary, to impart greater stability to the structure, and for its perfect bracing, especially if the head-frame is high.

They may also be inclined in the other direction, but this is not necessary unless it is desired to carry them to foundations somewhat distant from the shaft.

The tendency of the upright part of the head-frame to overturning when hoisting, due to the resultant of the forces acting thereon, is resisted by a strut, or brace, *D*, extending from the framework near the sheave to the ground, and in such a direction that the resultant of the forces will lie between the foundations of the upright and the brace.

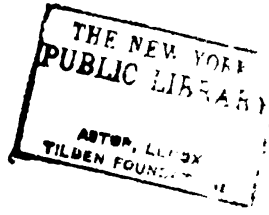
THE NEW YORK
PUBLIC LIBRARY
ASTOR, LENOX
TILDEN FOUND

THE NEW YORK
PUBLIC LIBRARY
ASTOR LENOX
TILDEN FOUNDATIONS

This resultant force is due to the weight of the load and the force exerted by the engine in raising it, both equal, and exerted in the direction of the rope.

2581. Fig. 949 shows a timber head-frame in plan, side elevation and end elevation. A fan is shown at *E*. The yard landing is shown at *F* and the trestle landing at *G*. A self-dumping cage is shown at *H*, with a car ready for dumping in the chutes. The levers for opening the chute gates are shown at *I*. The bars for screening the coal, when dumped, are shown in plan at *K*. The shed *L* shown in side elevation is for a roof to the chutes, and for such tracks or machinery as may be required at the trestle landing.

2582. In Fig. 950, which is a side and end elevation of an iron or steel head-frame, the yard landing is shown at *F*

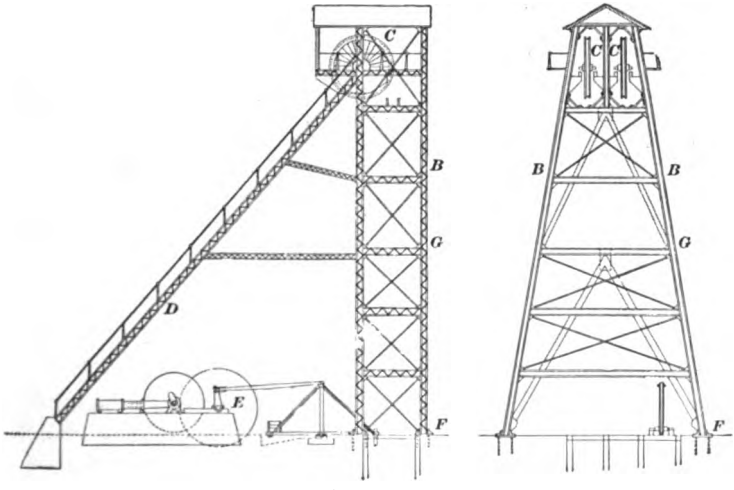

FIG. 950.

and the coal landing is shown at *G*. The location of a pump is shown at *E*.

2583. The direction and intensity of the resultant of the forces acting on the head-frame are determined by means of the parallelogram of forces.

In Fig. 951, *E C* represents the direction of the rope from

the engine to the sheave, and $D\ C$ the direction of the rope from the shaft to the sheave. Their intersection is at C.

If the weight of the cage, car, load, and rope is 8,000 lb., and if a scale of 4,000 lb. to the inch is assumed, a distance can be laid off from C to D, 2 inches long, which will represent the direction and intensity of strain due to a vertical lifting of the load. The weight of the cage, car, load, and rope will produce the same strain in the rope in the direction $C\ E$ that it does in the direction $C\ D$, so that from C

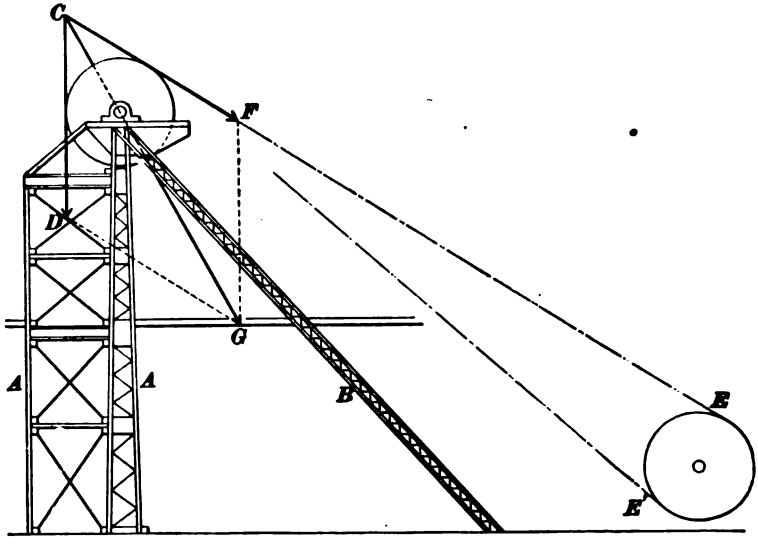

FIG. 951.

a distance $C\ F$ can be laid off representing a strain of 8,000 lb. On a scale of 4,000 lb. to the inch, $C\ F$ will be laid off 2 inches long.

The resultant is now found by drawing a line $F\ G$ parallel with $C\ D$, and $D\ G$ parallel with $C\ F$. From the intersection G of these lines, a line is drawn to C. Then, $C\ G$ will represent the resultant in direction and intensity which, measured to the scale, will show a strain of between 14,000 and 15,000 lb. The direction and intensity of the resultant will vary if the direction of the underwinding rope is also considered.

The strut, or brace, *B* is designed to resist this thrust, and where there are no other strains to be considered the direction of the brace would be theoretically in the direction of the line *C G*. There are vibrations caused by the variable strains in hoisting, and by the movement of the ropes, which would subject the structure to injurious strain if the braces were too near the line of the resultant.

Therefore, the direction of the brace will be somewhere between the resultant and the line of the underwinding rope of the engine, or its direction will be such that the angle between it and the resultant will include $\frac{1}{3}$ or $\frac{1}{2}$ of the angle formed by the resultant and the line of the underwinding rope.

The brace should have a batter of from 1 to 2 inches to the foot, so as to be wider at its foundation than at the top, for greater stability and better bracing.

It may be found necessary to provide space for a Cornish or other pump near the shaft, or for the movement of cars around the shaft. This may be arranged by drawing in or spreading the brace, provided the limits indicated are not exceeded.

2584. In the design of the head-frame, proper clearance in the structure should be allowed for the movement of the cars at the landings, and for passing cars around to the rear of the shaft, if such an arrangement is desired.

The material of which the head-frame is built will be wood, iron, or steel. Generally the former is selected for moderate outlay, or where operations are of a more temporary character. Iron or steel head-frames are adopted for operations of greater magnitude, for high head-frames, or where timber is scarce, or where hoisting is deep and rapid. The strains are better resisted in a metal structure than in a wooden one.

Wooden head-frames are built with each post of single timbers 12, 14, or 16 inches square, or they may have composite posts made by joining and bolting $6'' \times 12''$ or $7'' \times 14''$ timbers. In this case, the uprights supporting the sheaves

have 4 such timbers in each post. The upright on the opposite side of the cage has 2 such timbers in its posts, as has also the main brace.

Iron or steel head-frames are built of angle-irons, with web of lattice or plate. Channel-iron is also used, joined with lattice bracing, forming a hollow post.

Angle-irons are generally $2'' \times 2\frac{1}{2}''$, $3'' \times 3''$, or $4'' \times 4''$, used in sets of 2 or 4, braced with $\frac{1}{2}'' \times 2''$ iron, about 8 inches deep or more. Channel-irons are generally 8 to 12 inches deep, joined with $\frac{1}{2}'' \times 2''$ braces.

The height of the head-frame to the sheave center varies from 35 to 50 ft. at shafts with only one landing, and from 50 to 85 ft. in height for shafts landing on a trestle. The distance from the foundations to the tipple landing depends upon the height above railroad-tracks needed for dumping or for filling bins, supplying coke-ovens, etc.

2585. Where the coal is to be loaded on railroad-cars, and only one or two sizes are produced without much handling or screening, a height of 24 feet is sufficient; for producing three or four sizes, a height of about 30 feet is required; and if any handling or cleaning of the coal is necessary, a height of 35 or more feet is necessary, unless the ordinary bar screens are replaced by a shaking screen and elevators to diminish the height of the structure. Where coke-ovens are to be supplied, a height of at least 30 to 36 feet above the railroad-tracks at the coke-ovens is required for dumping directly into the larry without the intervention of bins for storing coal. Bins should be provided, and generally a height of 60 to 65 feet for the tipple platform above railroad-tracks at coke-ovens will afford sufficient bin room.

This height of the tipple platform may be reduced if screenings are to be used in coking, or the coal is to be washed. This will necessitate some intermediate handling of the coal by conveyers or elevators, in passing it from the tipple to the coal washer or coke-ovens. In this case it is preferable that the height of the structure be a minimum.

The screenings may be raised by elevators or in cars on a plane to the dumping points at the ovens or the washer.

The height from the tipple platform to the center of the head sheaves varies from 25 to 40 feet, depending upon the height of the cage and the clearance needed for safety devices. A height of 35 feet is generally sufficient.

DISTANCE OF ENGINE FROM THE SHAFT.

2586. The engine should be located at a sufficient distance from the shaft to allow the rope to wind evenly on the drums, and so that the coils on the drums will not loosen when the cages rest on the landings. The longer the lead of the ropes, the better they will coil on the drums.

In some cases the location of the engine near the hoisting shaft, with the ropes leading therefrom in a nearly vertical position, can not be avoided.

Too great a distance of the engine from the hoisting shaft, with heavy ropes, may result in the weight of the rope between the head sheaves and the engine raising the cage a few inches from the tipple landing when the loaded car is removed.

It is usual to make the horizontal distance of the center of the engine-drums from the center of the shaft from one to one and a half times the vertical height of the center of the sheaves above the center of the engine drums.

For high head-frames this horizontal distance is 1 to 1.3 times the vertical distance; for low head-frames from 1 to 1.5 times the distance.

If in a head-frame this vertical distance is 70 feet, then the horizontal distance will be from 70 to 91 feet. If the height is 50 feet, the horizontal distance will be 65 to 75 feet.

2587. The end of the engine foundation is sometimes arranged for the foundation of the back brace of the head-frame. In this case the brace is caused to lie at a considerable distance from the resultant. The arrangement of the tracks at both landings and the possible future need of structures near the shaft for pumping, ventilation, etc.,

should be considered in connection with the planning of the head-frame. In order to provide the necessary clearance and space, the posts of the upright part of the head-frame can be planned near or at some feet from the shaft, and with little or considerable batter, provided the limits are not exceeded.

The points where the posts and the brace penetrate the platform and strike the ground should be noted with relation to the proposed tracks. Either the arrangement of the tracks or the head-frame can be altered to suit, and the spread of the brace can be varied somewhat to provide some clearance in front of its posts or between them, at either the tipple or yard landing.

ARRANGEMENT OF TRACKS.

ARRANGEMENT WHERE THE TIPPLE LANDING IS ON A TRESTLE.

2588. The tracks between the shaft and tipple may be very short or long, varying with the particular conditions and requirements of the mine. There are three cases under which the length of tracks may be considered, viz.:

1. In the case of a self-dumping cage, as shown in Fig. 949, where there will be no tracks between the shaft and tipple.

2. Where the car is moved off of the cage a distance about equal to its length and dumped and returned, or, if the arrangement will permit, the cars are dumped on both sides of the cage, as shown in Fig. 952, in which *A* is the shaft and *B* the tipples on both sides of the shaft.

3. Where arrangements make it desirable to remove cars from the cage, and arrange passing tracks for loads and empties and for running rock cars to the dumps, which may be either in the coal tipple or at a distance. This third arrangement is in most general use.

2589. The arrangement of the self-dumping cage can be used, provided it is not desirable for any reason to frequently remove the cars from the cage at the top of the

shaft. Under certain conditions, the depth and rapidity of the hoist, size of load, the amount and handling of rock, cleaning of coal, and the steadiness with which cars can continue in use without removal from the cage outside, will determine its use.

Rock can be handled by a self-dumping cage by providing a rock chute at the rear of the shaft, or through a trap-door in the coal chute, as shown at *A* in Fig. 949.

If the coal requires picking to remove slate, it can be done by introducing a belt conveyor at the foot of the screens for

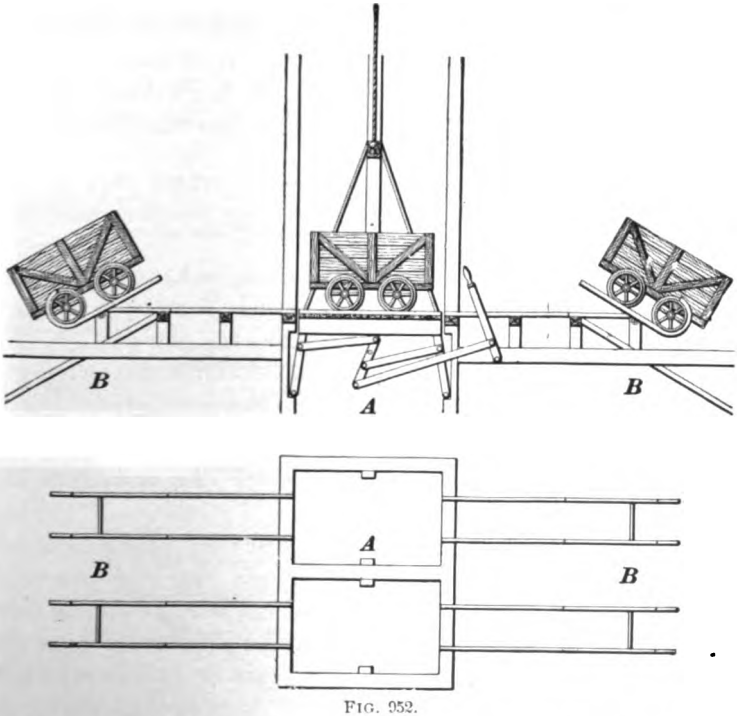

FIG. 952.

the lump coal to land on. This should be about 4 feet wide and long enough to allow sufficient time for picking before it discharges into a bin or the railroad-cars.

It is important that a self-dumping cage allows the coal or rock to free itself entirely from the car in dumping,

whether wet or dry, and that the time required produces no serious delay.

For the arrangement in the second case it is preferable that the coal be clean, and that little rock is to be handled, although, as in the first case, the rock can be handled and the coal cleaned as indicated. This plan also requires that cars must not be frequently changed outside.

2590. In the third case there are two arrangements, as follows:

1. Where both the removal of loaded cars from the cage and the return of empty cars thereto is done at the front of the shaft.

2. Where the loaded cars are removed at the front of the shaft and the empty cars are returned to the cages at the rear of the shaft.

In either case there will be one or more empty cars on the platform, in readiness to be put on the cages when the loaded cars are removed.

The distance needed between the shaft and the tipple will depend upon the arrangement of the tracks and the switching room required for the loaded and empty cars, and possibly for rock cars. Generally 20 to 60 ft. will be sufficient, although longer tracks can be used if necessary.

2591. First Arrangement.—In this case it may be necessary to dump the cars at one tipple. An arrangement

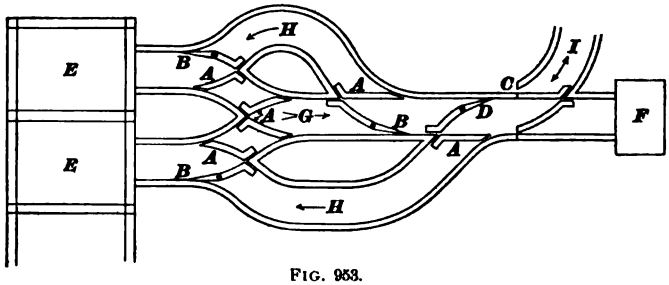

FIG. 953.

of tracks for this purpose is shown in Fig. 953, although where only one dump is employed it is preferable that it be one on the principle of the Mitchell, the Wilson, or the

Phillips dump, which allows the cars to pass beyond the tipple after dumping. These latter arrangements are described under the head of tipples.

2592. The arrangement shown in Fig. 953 requires longer tracks than where there are two tipples. In this arrangement the cageways are shown at *E*, *E*, the tipple at *F*, the loaded track at *G*, the empty tracks at *H*, *H*, and the rock track at *I*. At *A*, *A*, *A*, *A* are point-rails, at *B*, *B*, *B* spring-latches, at *C* a throw switch, or latches, and at *D* a latch which is moved by the foot.

Rock can be switched out as shown and carried to the rock dumps wherever located. An arrangement of tracks leading to two tipples is shown in Fig. 954.

In this case *E*, *E* show the cageways and *F*, *F* the tipples. The loaded cars run straight to the tipples and the empty

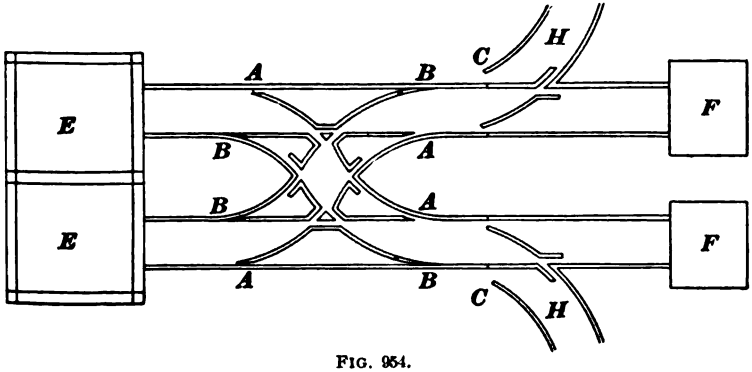

FIG. 954.

car is returned, by the curved tracks and switches, to the cage opposite the one on which it was hoisted and from which a loaded car has just been removed. The rock cars are run out on tracks *H*, *H*. By referring to the plan, it will be seen that an arrangement of point-rails at *A*, *A*, *A*, *A*, of spring-latches at *B*, *B*, *B*, *B*, and of throw switches at *C*, *C* will be very effective. These tracks require very little distance from the shaft to the tipple.

2593. Another arrangement, shown in Fig. 955, will permit of holding several empty cars. In this case,

however, the loaded and empty cars hoisted and lowered on the one side can not be crossed over to the other side, which is desirable in some cases.

2594. In Fig. 955, as in Fig. 954, *E*, *E* show the cage-ways, *F*, *F* the tipples, and *H*, *H* the rock roads. The loaded

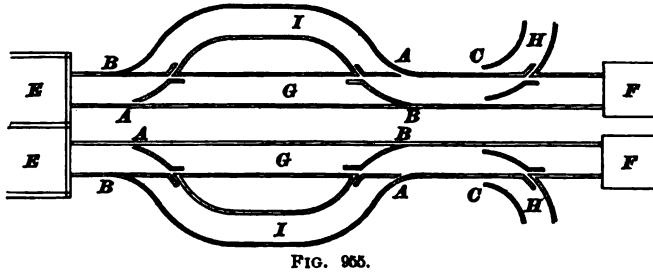

FIG. 955.

tracks *G*, *G* run straight from the shaft to the tipples, while the empty tracks *I*, *I* are of the nature of turnouts. The arrangement of switches is as follows: *A*, *A*, *A*, *A*, point-rails; *B*, *B*, *B*, *B*, spring-latches; *C*, *C*, throw switches, or latches.

If it is necessary to cross cars over from one side to the other, the two center tracks can be brought together, form-

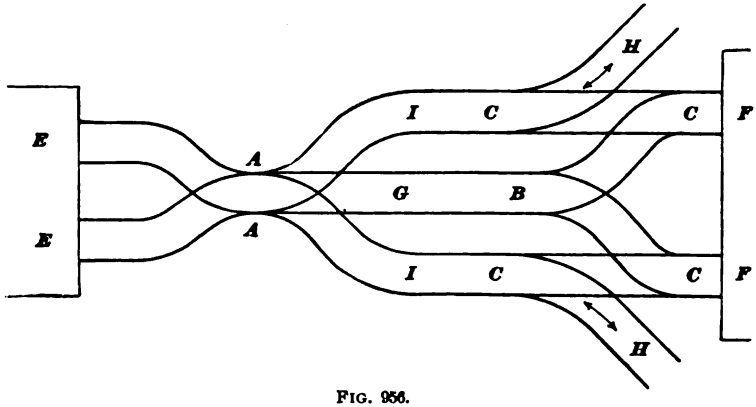

FIG. 956.

ing three tracks at the center, and resolving into two tracks at the shaft and tipple. This arrangement is shown in Fig. 956.

2595. In Fig. 956, *E*, *E* show the cageways and *F*, *F* the tipples. *G* is the loaded track, *I*, *I* the empty tracks, and *H*, *H* the rock tracks. *A* is a double throw switch, *B* spring-latches, and *C*, *C*, *C*, *C* single throw switches, or latches.

If there is any rock to be handled, it can be switched out, as shown, and led to distant rock dumps to the right or left or beyond the tipple, or to rock chutes in the tipple structure, where the rock can be held in bins, and finally removed in railroad-cars.

2596. Second Arrangement.—Where the empty cars are to be returned to the cages by the rear of the shaft on a trestle, it is generally done by back-switching, as shown in the tipple tracks in Fig. 947.

Where speed is required, this arrangement is preferable to that of returning the empty cars to the cage on the same side from which the loaded cars are removed, as the loaded car can be pushed off the cage by the empty car as the latter is being pushed on.

2597. In Fig. 947 a track for handling the rock is shown. If there is no rock, the tracks between the shaft and the tipple can be made straight.

Instead of tracks at the rear of the shaft, steel plates can be used for the cars to run on, which will not require as much length as the tracks with their switches.

Where a system of tracks becomes very complicated on the tipple landing, on account of the room and number of switches required for the shifting of the cars, steel plates can be used on the tipple platform in place of the system of tracks. Very little distance is needed in this case between the shaft and the tipple and at the rear of the shaft. The disadvantage of steel plates is in their tendency to wear in grooves, if of inferior material. Further, they are so slippery that it is difficult for the men to get a foothold to push the cars; and the cars do not run upon them as easily as upon rails.

It may be necessary, in some mining operations where small cars are used, to hoist two cars side by side on a wide

cage. In this case a tipple platform laid with plates is preferable, and permits also of putting the empty cars on the cage at the rear of the shaft.

In planning the tracks on the tipple landing, the loaded tracks should be straight and as free as possible from switches, or open points, to avoid the necessity of pushing cars sideways to clear the switches.

Sufficient room should be allowed at the rear of the shaft in case of back-switching, or for the introduction of some mechanical device for the removal of the loaded cars from the cage and the shifting of empty cars thereon.

2598. There are two classes of apparatus for shifting cars, known as **car-shifting devices,** one the invention of Mr. Robert Ramsay, the other that of Mr. F. B. Parrish. In the former a ram pushes the empty car against a loaded car on the cage. The empty car is thus placed on the cage and the loaded car pushed off and continues on a track about 32 feet long, with a fall of 4 inches, to the tipple. After being dumped, the car is switched to an empty track, passing to one side of the shaft. This track is about 50 feet long, having a fall of 8 inches, and lands the empty car on a truck, which is moved up an incline at right angles to the line of the tipple platform, and thus raises the car up the vertical height of 1 foot which it has descended in moving from the cage to the tipple and from there to the truck.

When the empty car is thus brought opposite the loaded car on the cage, the power is applied to the ram automatically, and the process repeated of pushing an empty car against a loaded car on the cage, moving the latter to the dump and placing the former on the cage, in readiness to be lowered.

This apparatus requires a distance of about 28 feet to the rear of the shaft, and a width of about 40 feet for the first 10 feet, and 16 feet in width for the remaining 30.

2599. The apparatus designed by Mr. F. B. Parrish operates as follows:

The platform of the cage inclines towards the tipple, so

that when the car is released from the lock holding it on the cage, it moves towards the tipple on a track about 30 feet long, having a fall of about 1 foot.

A rope is operated, first in one direction and then in the other, by an engine located about 23 feet back of the shaft, and to one side of the platform and below it.

This rope operates in a plane about 6 feet above the tipple platform, and passes from the engine up to an overhead pulley, and then continues by the side of one cage compartment to the side of one of the tipples, and from this tipple to the second one, and then back by the side of the other cage compartment to a pulley 23 feet back of the shaft, and on the other side of the platform from the engine. From this pulley it passes to the engine.

A chain attached to this rope has a hook which is attached to the hinge of the car door, and when the car has been emptied at the tipple the rope is operated to carry the car on the empty track, about 50 feet long, around the side of the shaft, and up an elevation of 18 inches to a truck operated by the same engine, and carrying the empty car opposite the cage. The empty car is then moved on the cage at the same time that the loaded car is removed. The empty car rests on an inclined track on the truck, and at sufficient elevation to move to the cage by gravity when released.

In both these devices, the shifting trucks are arranged so that when one is moving the empty car to the position opposite the cage of one compartment, the other truck is moving to position for receiving the empty car for the other compartment. This apparatus requires a distance of about 24 feet to the rear of the shaft and a width of 32 feet.

2600. If the arrangement of tracks or lack of space prevents the use of the preceding arrangements, mechanical lifts can be introduced at some portion of the return empty tracks, where they are straight, as at the sides of the shaft, in Fig. 947, and the cars can be raised sufficiently high to continue over the back switches at the rear of the shaft.

The usual style of lift is made of sprocket-chain arranged

in the center of the track for a length of 6 or 10 feet, as required, and having a rise of from 1 in 5 to 1 in 3. Lugs are attached to the chain at intervals, which move the car by pushing against its axle, bumpers, or blocks bolted to the bottom of the car. The advantage of car-shifting devices is the increased rapidity with which the cars are handled.

2601. The usual grades with gravitating tracks are as follows:

For loaded cars a steep grade is provided at the start. It is about ¾ or ½ inch to the foot for 10 or 15 feet, and the balance of the distance is at the rate of 6 inches per 100 feet for straight track, and more if tracks are uneven and curved.

The return empty track can have a short steep grade of ¾ to 1 inch to the foot for the first 10 feet, and at the rate of 9 to 12 inches per 100 feet for the balance of the distance. If the short steep grades produce too great a difference in the elevation of the tracks, they can be omitted, as the cars can be given a start by being pushed by hand.

ARRANGEMENT WHERE THE SHAFT HAS ONE COMMON LANDING LEADING TO THE TIPPLE AND TO THE YARD LEVEL.

2602. It is desirable in this case that the shops, supply houses, and material yards be located conveniently to the return empty track and its branches.

Generally, around or near the air-compartment side of the shaft will be located one or more of the buildings for ventilation, pumping, air-compressors, an electric plant, or an engine for underground haulage. The location for the empty return track, and, therefore, the shops, yard, etc., may have to be, on this account, on the opposite side of the shaft from the air compartment.

If the tracks between the shaft and the tipple are short, their plan will be similar to the arrangements already explained for returning the cars to the cages, either by the front or rear of the shaft, with some modifications for switching cars between the mine and shops and yards by means of turnouts or crossings.

If the distance is long between the shaft and the tipple, the loaded tracks from the cages should be led together at a short distance from the shaft, and one loaded track be used to the tipple.

After dumping at one or more tipples, the empty cars should be switched or crossed over to one empty track returning to the shaft, from which branch tracks turn off to repair-shops, lumber-yard, etc.

Another track with branches should be turned off from the loaded track near the shaft, and run to the yards. Over this track coal is taken to the boilers, and the crippled cars, machinery, and other material from the mine are taken to the shops and the yard.

2603. In Fig. 948 is given an ideal arrangement of tracks in the case of a shaft with only one landing, where the empty cars make a half circuit in returning to the shaft. This plan is preferable to the arrangement of back-switching of cars, provided there is sufficient room outside for the curved tracks and the arrangement of the shaft bottom will permit of its adoption.

In this plan, the empty cars, on arriving at the rear of the shaft, have their door ends reversed.

This requires the tracks at the shaft bottom to be similar to the arrangement on the outside, so that cars will be headed correctly into the mine.

Some shaft bottoms are planned especially to introduce this arrangement.

If the conditions do not permit of using this system of tracks, they can be made nearly parallel, and arranged for the return of the empties to the mine by the front or rear of the shaft by back-switching, as shown in Fig. 957, and the main features in switches and branch tracks can be still maintained.

2604. In Fig. 957 the shaft is shown at *1*, the scales at *2*, and the tipples at *3*. The hoisting-engines are shown at *4*, the boilers at *5*, the Cornish, or bull, pump at *6*, and the fan, which may be some distance away from the rest of the

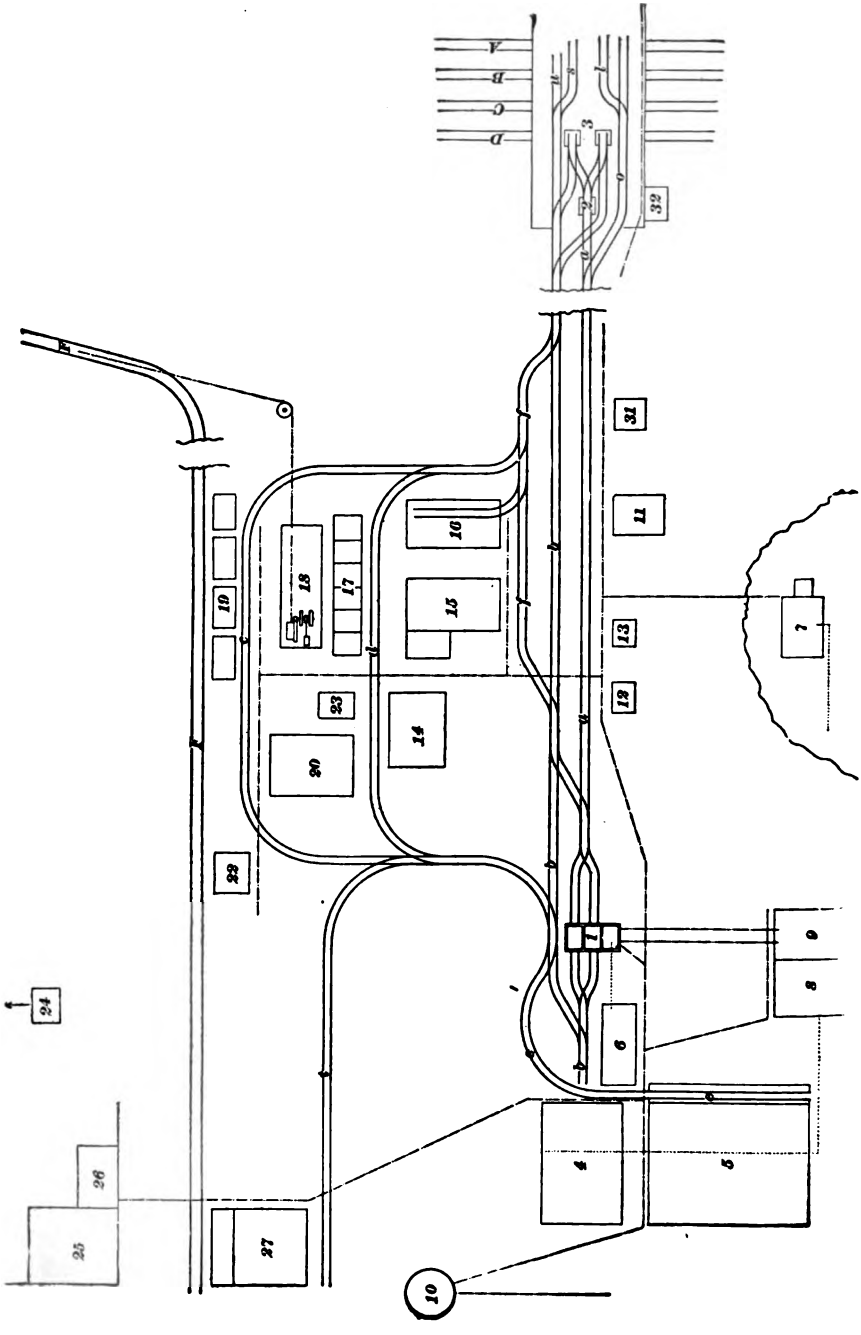
A
B
C
D
3
2
32
31
11
16
15
18
17
19
13
12
7
23
14
20
22
1
9
8
6
24
4
5
26
25
27
10

FIG. 95.

plant, is shown at *7*. The electric or compressed-air plant is shown at *8*, and the underground haulage plant is shown at *9*. The wires from the electric plant, or pipes from the compressed-air plants, as well as the ropes from the haulage plant, enter the mine through the pump compartment of the hoisting shaft. The tank for water-supply is shown at *10*, the wash-house at *11*, the mine office at *12*, the lamp house at *13*, the check-clerk's office at *31*, and the weighman's office at *32*. The machine-shop is shown at *14*. The blacksmith shop *15*, with an addition for tools, is shown alongside of the carpenter shop *16*. The sawed-lumber yard *17* is close to the carpenter shop, and adjoining it is the sawmill *18*. The timber and rail yard is shown at *19*. The supply house is shown at *20*, the oil house at *22*, and the iron and pipe shed is shown at *23*, the latter being convenient to both the machine-shop and blacksmith shop. The powder house is shown at *24*. As mentioned in describing other plans, the powder house should be located at least 1,000 feet away from other buildings. The stable *25* and the harness and wagon house *26* are side by side. The hay and feed storehouse *27* is located alongside the material track, with a wharf for receiving feed on the side next the track. It is also close to the stable.

2605. In this arrangement, the loaded cars from the shaft *1* are run over the track *a* to the scales *2*, and thence to the tipples *3*. The empty cars return to the shaft by track *b*. The rock cars are run to the dump over track *o* on one side of the tipples, and are returned to the shaft over track *u* on the other side. The cars of dirty coal are run onto track *l*, and cars needing repairs are run on track *s*. Timber and rails are taken to the shaft over track *c*, and the supplies are taken to the shaft over track *c* or track *d*. Sawed lumber and machinery are moved to any part of the plant by means of track *d*. Empty cars are taken to the yard or to the carpenter shop on track *f*. Hay and feed are taken to the shaft over track *t*. The railroad-tracks are arranged under the tipple, as in Fig. 948. The empty shifting

track is shown at *A*, the lump-coal track at *B*, the nut-coal track at *C*, and the pea-coal track at *D*. The track for material to the timber-yard, oil house, hay and feed store-house, etc., is shown at *F*. If necessary, an inclined plane can be put in this track, up which loaded cars can be pulled by a wire rope attached to a drum run by the saw-mill engine. The location of the rope in such a case is shown as —·-·—·-·—. The water-supply pipes are shown thus —·—·—. The steam-pipes are shown thus . . . . . .

2606. In some plants the peculiar position of the tipple with relation to the shaft and other buildings renders the plan of half-circuit tracks more feasible for the return of empty cars to the shaft, and if the reversed position in which they arrive there is not desired, they are turned on plates located at the rear of the shaft before entering the mine.

If the tracks make a half circuit at the tipple and also a half circuit at the rear of the shaft, the cars will have made a full circuit, and arrive at the shaft headed the same way as when they left it.

In any of the arrangements of tracks where the distance is great between the shaft and the tipple, they can be made gravitating, and mechanical lifts introduced at some one or more points where the empty and other cars all pass over the same track in returning to the mine, as shown in Fig. 948.

If the difference in the elevations of the various tracks is very great and occurs in the yard, it may prove a disadvantage, so that it is preferable that the mechanical lift in this case be near the tipple, and the elevation of the yard be kept nearly level.

A second mechanical lift may be necessary at the rear of the shaft to overcome some slight differences of elevation in the track, if the turnout from the loaded track to the yard is made gravitating.

The location of a mechanical lift at the rear of a shaft is objectionable unless other tracks exist, so that heavy machinery, lumber, etc., will not have to be handled over it.

If it is desired to maintain the system of tracks between

the shaft and tipple at a level, an endless rope can be introduced, moving in the direction of the loads and to one side or over the cars, and returning in the direction of the empty track.

YARD TRACKS.

2607. Branch tracks, conveniently arranged according to the conditions and requirements, will be needed in the yard, in the several directions, as shown in Figs. 947, 948, and 957, for the following purposes:

1. Tracks for handling heavy timbers, rails, piping, etc., which will have to be transferred to the cages. (See tracks *c*, Figs. 947, 948, and 957.)

2. Either the same or other tracks for loading sawed lumber, props, hay, feed, etc., onto cars going into the mine from various storehouses. These cars will generally run directly onto the cages. (See tracks *d*, Figs. 947, 948, and 957.)

3. Tracks to the carpenter shop for cars needing repairs. (See tracks *d*, Figs. 947 and 948, and track *f*, Fig. 957.)

4. Track to the machine-shop for handling machinery on trucks from the various points above and below ground. (Track *g*, Fig. 947, track *e*, Fig. 948, and track *d*, Fig. 957.)

5. Tracks to the boilers for coal, unless the boilers are handy to railroad-tracks and can be more conveniently supplied from railroad-cars loaded with coal or screenings. (Tracks *e*, Figs. 947, 948, and 957.)

If there are isolated plants using boilers, coal should be supplied thereto by branches from the mine or railroad-tracks as most convenient.

SPECIAL FEATURES IN BUILDINGS AT SHAFT MINES.

2608. The arrangements and features of each of the buildings in the mine plant will be explained farther on, but a few important points in their arrangement at shaft mines should be mentioned here.

The danger in case of fire, where timber is used in the construction of many of the buildings that of necessity are so near the shaft, makes it advisable that the head-frame,

platform, and structure be built of iron or steel, also the tipple structure if it is near by. All roofs should be of corrugated iron.

If the engine and boiler houses have corrugated roofs, the greatest danger in case of fire there is overcome, but greater safety is secured if their walls also are built of stone, brick, or corrugated iron.

If a fan house is located near the third compartment of the shaft, it should also be made fireproof with brick walls and iron casing and roof.

The carpenter, blacksmith, and machine shop and other buildings can be sufficiently removed so as not to be sources of danger in case of fire; although, if the cost of construction can be incurred, they should be made fireproof. In the latter cases, the risk of the loss of each building and consequent delays to the operations are principally concerned.

With wooden buildings surrounding the shaft opening, there is risk of the total destruction of the property, inside and outside, as well as the possible loss of life in case of fire.

VENTILATING PLANT.

2609. As there are generally two openings to a shaft-mine, it is preferable that the ventilating plant be erected at the second opening and not at the third compartment of the hoisting shaft, so as to leave this compartment open as an air inlet, also for pipes or rods for pumping, ropes for haulage, or air-pipes, or electric wires for haulage, coal cutting and pumping underground, as the case may require.

It is well to have a fan erected near the third compartment for use in case of emergency, and connected therewith by an underground conduit just below the surface. (See Fig. 947.) The air compartment can remain open, free from obstructions, until it should be necessary to use the fan, when, by closing certain doors, always in readiness, at the top and bottom of the shaft, the ventilation can be controlled as may be desired, in case of accident to the other fan or in other emergencies.

SURFACE ARRANGEMENTS AT A MINE OPENED AT A POINT BELOW THE TIPPLE LEVEL.

GENERAL PLAN.

2610. The distinctive features wherein a mine opened at a point below the level of the tipple differs from mines opened otherwise, are in the arrangements necessary for hoisting trips of cars with ropes on an incline more or less steep and long, and finally landing on a nearly level platform, where they are dumped; also in the connection of the slope and yard tracks, more especially where the tipple is at a higher elevation than the yard tracks, and cars must be lowered or hoisted by the slope engine in shifting them between the slope and yard tracks.

Sometimes but one or two cars are hoisted at a time, due to a short haul, requiring very little power and small landing room. Generally from six to fifteen cars are hoisted at a time, requiring long landing room and powerful engines, which make it important that the latter be located on line with the slope and trestle at some convenient point, so that the structure can be properly braced, and no complicated strain brought to bear on the sheaves at the knuckle and points where the rope changes direction.

In this particular the location of the engine on line with the slope is, perhaps, of more importance than at a drift mine, because at a drift mine either the power required for the haulage of long trips is not so great as at the slope or the surface location of the tracks, where curves are required, permit of a solid foundation for the sheaves, so that the ropes can be led to the engine, whether located on line with the drift or not.

2611. A slope mine differs from a shaft mine, but is similar to a drift mine in the following respects:

1. The lowering and hoisting of men and mules is not necessary unless the slope is very steep, as a second opening

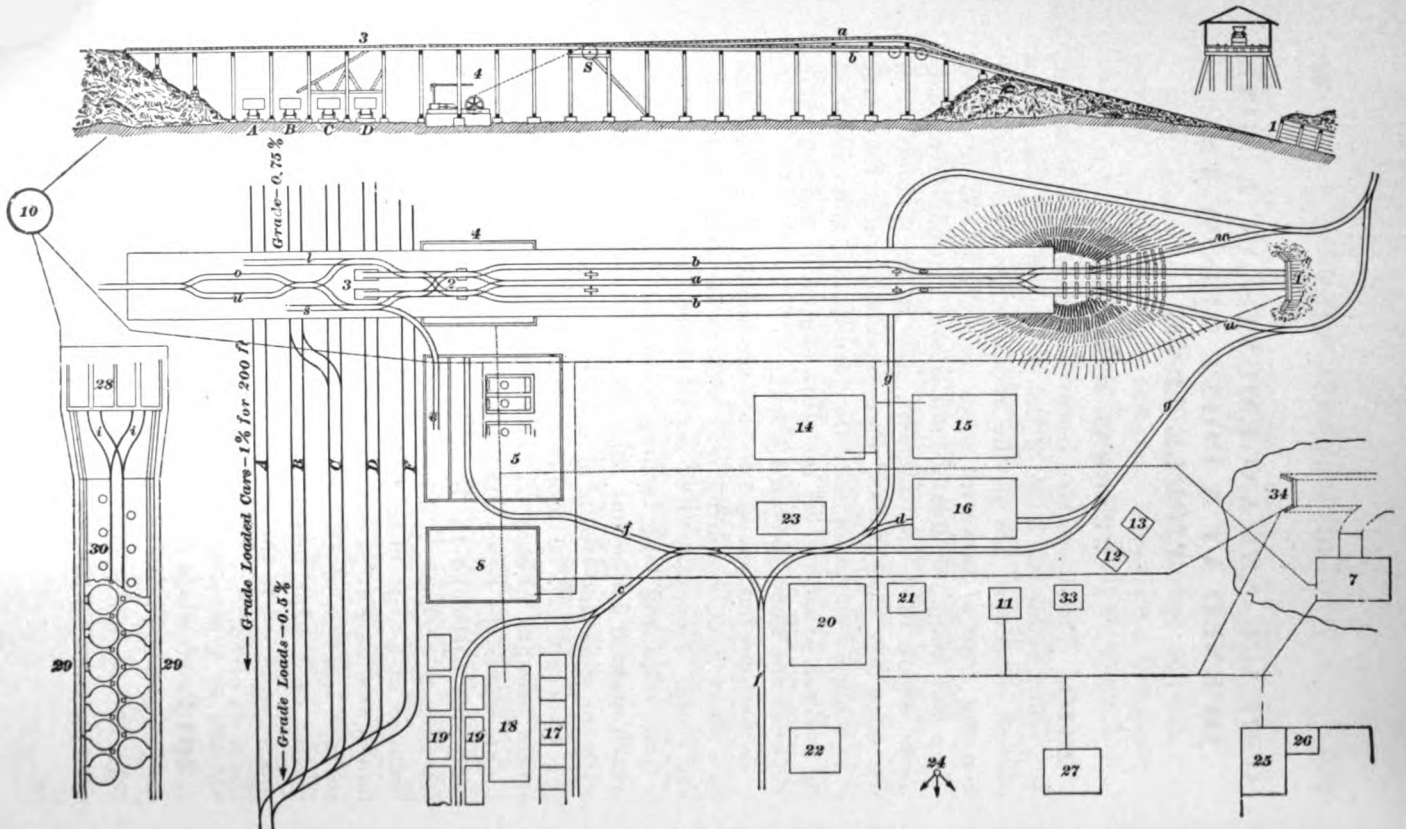
Grade—0.75 %
Grade Loaded Cars—1% for 200 ft
Grade Loads—0.5 %
A
B
C
D
E
1
2
3
4
5
6
7
8
9
10
11
12
13
14
15
16
17
18
19
20
21
22
23
24
25
26
27
28
29
30
33
34

FIG. 958.

is generally provided for their entrance and outlet, although in some cases they enter by the haulage road.

2. Stables for mules are not usually built underground, in which case it is not necessary that hay or feed be lowered into the mine, unless it is for the noon-day meal.

3. Long timbers, pipe, rails, etc., can be conveniently lowered into the mine, whereas at a shaft mine, unless proper provision is made at the top and bottom and cages are conveniently arranged, it is sometimes inconvenient, if not impossible, to handle material of lengths as great as desired.

2612. A general arrangement for a slope is shown in Fig. 958. In this case the landing platform and tipple is between the mine outlet and the railroad-tracks, and the ground is comparatively level, with the mine outlet near the trestle. In this figure, which shows a plan of the outside arrangements, with an elevation of the trestle and a cross-section of the trestle at the knuckle, the mouth of the slope is shown at *1*, with an extension of its grade to a point high enough for a trestle with height enough above the railroad-tracks for the tipple. The scales are shown on the trestle platform at *2*, directly over the engines *4*, and the dumps are shown at *3*. The boiler house, with coal-bins in front, is shown at *5*. The compressed-air or electric plant is shown at *8*. The tank for water-supply is shown at *10*, and the water-supply pipes are shown thus — · — · —. The wash-house is shown at *11*, the mine office at *12*, and the lamp house at *13*. The machine-shop *14*, blacksmith shop *15*, carpenter shop *16*, and iron and pipe house *23* are shown in a group, which is an arrangement that is most convenient. The sawmill *18*, timber-yard *19*, and sawed-lumber yard *17* are also conveniently grouped. The supply house *20*, oil house *22*, and the clerk's office *21* are also conveniently located. The powder house *24* is not shown, but arrows indicate its approximate location, about 1,000 feet from all other buildings. The stables *25*, harness and wagon house *26*, and hay and feed storehouse *27* are located as near each other as possible. The manway or traveling way *34* is shown in connection

with the fan *7*. These may be located several hundred yards away, in which case a separate steam plant will be required for the fan. If the manway and fan are located but a short distance off, steam can be supplied to the fan-engine from the main boiler plant *5*. Or, if far away and there is an electric plant, the fan may be run by a motor, fed by wires from the dynamos. The steam-pipes from the boilers are shown thus..... The coal-bins for coke-oven supply are shown at *28*, the coke-ovens at *30*, and the coke wharves at *29*.

There are a few exceptions to this general arrangement, which will be referred to farther on.

The length of the trestle platform, as shown in Fig. 958, will depend upon the number of cars to be hoisted and the amount of shifting of cars necessary, also whether rock is to be handled.

2613. The system of tracks is arranged so that the loaded cars from the mine are drawn up and over the knuckle and on to a center track *a*, which is slightly elevated, so as to have a down grade of 1.66% towards the tipple. The loads are then distributed to the tipples, and when dumped they are run to either of the empty tracks *b* on the outside of the loaded tracks, which have a down grade of 2% towards the knuckle to facilitate their movement. The cars are collected from the knuckle towards the engine and held by a "stop" at the knuckle.

A rope is attached to the rear of the trip, and when it is to be lowered the "stop" is removed, and the incline of the tracks is sufficient to start the cars towards the slope.

In the passing of the loads from the slope tracks to the high center elevated track, there is some friction of the ropes against the side of the elevated structure, requiring guides or sliding pieces made of wood and laid from the inside rail of the empty tracks to the outside of the rails of the loaded tracks, so as to reduce the wear on the rope and guide its movement up from the sheaves and to one side of its slope line. The empty cars, in returning to the mine, carry the rope to the proper center line before passing over the knuckle.

In this arrangement the lead between the sheaves and the point where the loads turn out to the center track should be long. If the angle at the knuckle is too great, drums are better than sheaves at the knuckle, for the ropes will leave them more readily, as the loaded trips pull the rope sideways.

In this system of three tracks, sufficient length is provided for accumulating two trips on each side. The rope lies between the tracks from the knuckle to the sheaves, where the rope passes down to the engine, so as to be out of the way in shifting cars, and not in the center of the tracks.

Sufficient distance should be allowed from the engine to the sheaves *S*, deflecting the ropes from the platform to it, so that the coiling on the drum will be perfect. This distance depends upon the width of the drum and the load; 45 feet will be sufficient with a small drum and light load, although the longer the distance the better. One hundred feet is sufficient in all cases, and if this distance is needed and can not be obtained in the direction of the engine from the sheave *S*, shown in Fig. 958, the engine can be located under the trestle in the opposite direction from the sheave.

2614. An examination of the plan of tracks on Fig. 958 will show that loaded rock cars are run to the dump over track *o*, and the empty cars are returned over track *u*. Dirty coal is switched on to track *l* and crippled cars are switched on to track *s*. Coal for the boilers is run over track *e*. Cars are hoisted from and lowered to the yard level on tracks *w* by the hoisting-engine. Timber, lumber, and rails are taken to the slope over track *c*. Cars are taken to and from the carpenter shop over track *d*. Ashes are taken from the boiler house to the ash dump over track *f*. All of these tracks connect with tracks *g*, which in turn connect with tracks *w*. The larry tracks from the coal-bins *28* to the coke-ovens *30* are marked *i*.

The railroad-tracks are arranged as follows: *A*, empty shifting track; *B*, lump-coal track; *C*, nut-coal track; *D*, slack track, and *F*, material track, or track on which supplies in carload lots are received.

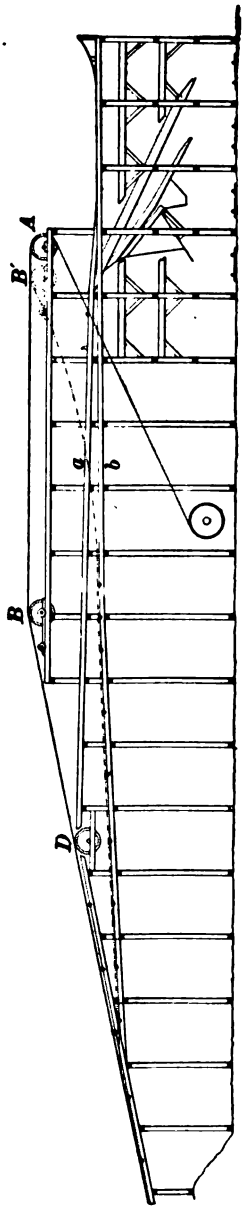

FIG. 960.

SPECIAL ARRANGEMENTS.

TRACKS.

2615. Fig. 959 shows an arrangement of tracks wherein an overhead traveling pulley is employed to guide the rope in raising the loaded cars to an elevated track which has a down grade to the tipple, and for returning the empty cars accumulating on an empty track with a down-grade to the slope. The empty track switches into the straight slope track, similar to the arrangement in Fig. 958.

In this arrangement the sheaves *A* and *D* are stationary. The sheave *B* is mounted on a truck which moves along a level track. When starting to hoist the load, the truck and its sheave are in the position *B*, but by the time the load has passed the knuckle and is running along the loaded track *a* the truck has moved to the position *B'*. When the empty cars on track *b* are attached to the rope and they are lowered, the truck leaves the position *B'* and runs along to the position *B*. The loaded track *a* has a fall of 1.66% towards the dump, and the empty track *b* has a down grade from the dump.

PUMPING AT A SLOPE MINE.

2616. The advancing face of the slope or dip workings requires that the pumping plant be continually extended with the increasing depth

of the mine. A very common practice has been to carry a line of steam-pipe from the boilers on the surface down the slope, or by a separate pipe-way, to a steam-pump located underground. This sometimes results in steam doing much damage, and it is a source of danger.

If a power is to be carried from the plant near the tipple to distant points underground for pumping, either compressed air or electricity should be used, and not steam.

In order to avoid the great length of pipes in long slopes and reduce the expense of pumping, it is best to bore two holes or sink a shaft from the surface to meet the face of the dip workings, and erect a pumping plant on the surface at that point.

In this case power can also be transmitted through the bore-holes or shaft for use in pumping, hauling, or coal cutting at distant points underground. Provision should be made in this case for supplying the plant with coal, carried thereto on mine or railroad cars, or by a rope tramway.

ARRANGEMENTS OF SURFACE WORKS FOR SPECIAL CONDITIONS.

2617. In some instances the distance between the trestle and the mouth of the drift or slope mine may be very long. In this case it will be found more convenient to erect most of the shops, storerooms, stables, material yard and offices near the mine opening, as in the surface arrangements at a drift mine. The location of the machine-shop will depend upon whether most of the machine-work is inside the mine or on the surface.

If the slope enters the hillside under such conditions that there is considerable ground at the same elevation as the platform of the tipple, and readily reached by level tracks, the shops may be erected thereon, and tracks run to them from the empty tracks on the tipple platform. The location of the storerooms and material yard should be at such points as are most convenient. If at a lower level, they can be reached by an inclined track or wagon road. This

arrangement is shown in Fig. 960, with a system of tipple tracks that is suitable for any slope. The tracks, however, are not gravitating.

2618. In Fig. 960 the mouth of the slope is shown at *1*, the engine under the platform at *4*, and the sheaves for

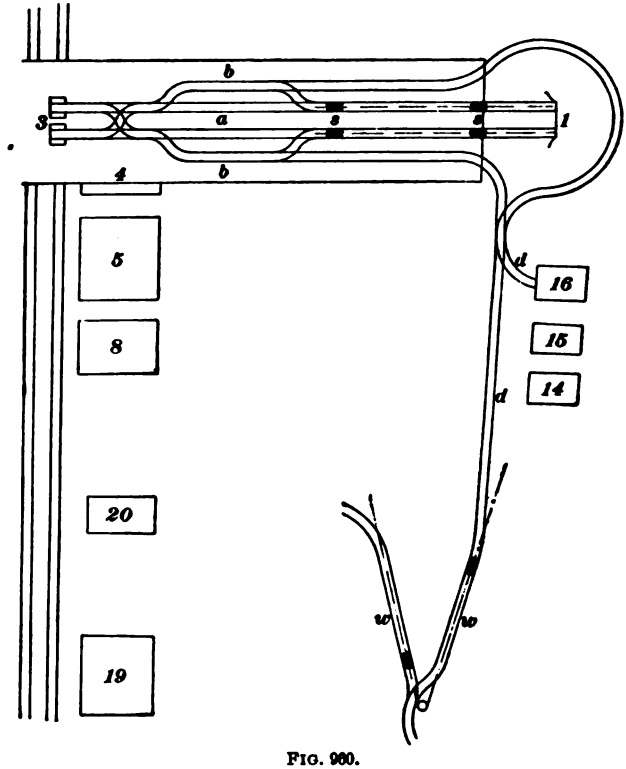

FIG. 960.

the ropes at *s*, *s*. The tipple dumps are shown at *3*. The boilers are shown at *5*, the compressed-air or electric plant at *8*, the supply house at *20*, and the lumber and material yard at *19*; these are all located convenient to the railroad. The carpenter shop *16*, the blacksmith shop *15*, and the machine-shop *14* are convenient to the slope and at a suitable height to have a level track *d* run from them to the platform. The loaded cars from the slope are run over tracks

a to the tipple, and the empty cars are returned to the slope over tracks *b*. The inclined tracks *w* are used to connect that portion of the plant near the railroad with the trestle and the buildings on the hillside. The cars are hoisted up the inclines by a rope from a drum in the machine-shop. This rope is shown thus —·-·—·-·—.

The inclined tracks *w* to the yard and buildings at the lower level, for hoisting lumber, etc., can be arranged near the slope and be operated by the slope rope by introducing sheaves, etc., for its deflection to the line of the inclined tracks.

The relative location of the railroad-track with respect to the line of the slope may be such that it will require considerable curvature in the tracks to bring the coal to the dumping point. The center line of the engine and that part of the platform supporting the ropes can be kept on line with the center line of the slope, and from the sheaves or the knuckle the alinement of the tracks and trestle can be given the necessary curvature to reach the railroad-tracks. Or, if the railroad-tracks lie beyond the slope from the engine, tracks can be led to a tipple by back-switching the cars after they land on the platform.

2619. The trestle should not be made to cross the mouth of the slope unless built of fire-proof material, so as to avoid danger in case of fire. If the distance is short between the railroad-tracks and the knuckle, the engine can be located and the tipple and chute arranged as shown in Fig. 961 in plan and elevation.

The points in common on both plan and elevation are the mouth of the mine *1*, the knuckle *2*, the sheaves for deflecting the rope *3*, and the tipples *4*. The location of the engine is shown at *5*, and the slack, nut, and lump coal tracks are shown at *C*, *B*, and *A*, respectively.

The loaded tracks from the slope to the tipples are shown at *b*, *b*, and the empty tracks at *a*, *a*. The inclined tracks to the yard are shown at *c*, *c*.

In some slope arrangements the grade is so steep that it is

necessary to employ a device called a "dummy," or platform car, for raising the car. Only one car is hoisted at a time.

This arrangement will be explained under inclined planes,

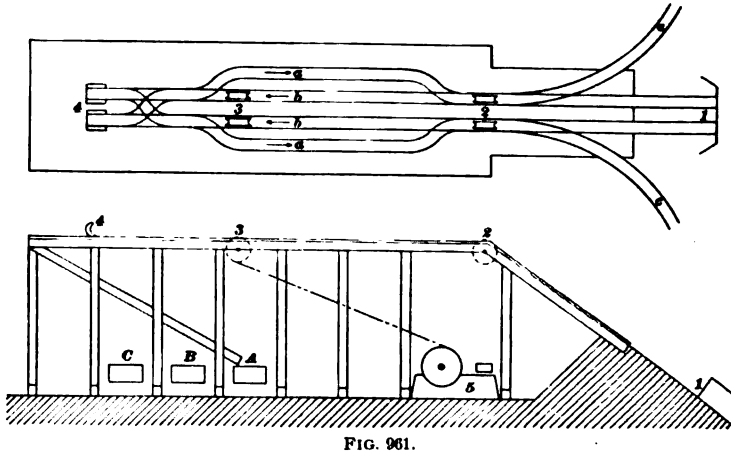

FIG. 961.

as its operation is very similar, whether coal be lowered or hoisted.

2620. The minimum grade on which empty cars will return of their own weight, and draw the rope along with them, depends upon the number of cars in the trip, and resistances at the engine, and friction of the rope on the roadway and rollers.

Under certain conditions, empty cars will descend on a grade of 3%, but the resistance met with in slopes makes it unwise to depend upon the ordinary types of slope haulage engines for grades less than 5%. Even with 5% grade, the slope should not be more than 1,000 feet long. There should be four or more cars in a trip, and loaded cars should not be hoisted at the same time. The trip should be started with some headway at the knuckle.

It is better to have the grade 7% to 8%, and for slopes longer than 1,000 feet this should be the grade for the balance of the distance, when the grade is 5% for the first 1,000 feet. For less grades than the above, the engine should be arranged for operating as an endless or tail rope engine.

SURFACE ARRANGEMENTS AT MINES OPENED BY DRIFTS.

ARRANGEMENTS ON A HILLSIDE, WHERE CARS CAN BE RUN BY GRAVITY TO THE TIPPLE.

2621. The particular features wherein a mine opened as above differs from other mine openings are:

1. In the movement of the coal to the outside.

This is done by a haulage way to the outlet over level or nearly level roads, for which either mules, endless or tail rope haulage, steam, electric, or compressed-air locomotives are used.

The haulage may be in trips of from one to ten cars with mules, and from about twenty to forty cars with rope or locomotives, although in some instances more cars are hauled.

2. In the drainage of the mine, which seldom requires the handling of water to any great height, as it will usually flow to the outside by the gradual fall in that direction. If it does not, the mine can be drained by the arrangement of siphons, or of light-pressure pumps, for raising water to small heights from local swamps or dips.

2622. The usual height of mine openings, opened as above, and near the dumping point, should be from 20 to 35 feet above the railroad-track.

The height of a railroad-car being about 7 to 9 feet above the rail requires that the tipple platform be 11 to 13 feet above the railroad, in which case no gravity system of screening can be arranged. In this case the coal is usually dumped directly into the railroad-car.

Short screens can be arranged with tipples 16 feet high, but for perfect screening, either revolving or shaking screens will have to be introduced for this height. Where the drift is lower than the tipple platform, it should be arranged, if possible, to locate the tipple and drift opening some distance apart, so as to haul the loaded cars up grade by mules, rope, or motors to the height desired for the

tipple. If this is not possible, and where the drift opening is 10 feet or more below the tipple platform, an incline should be introduced to raise the cars to the tipple.

The height of the tipple may be greater than 35 feet, but it is preferable to avoid too long a chute and to introduce special appliances described farther on; or, if there is sufficient height, the mine may be operated with a gravity plane.

Where the coal is dumped into bins for coke-ovens, the tipple may be 60 feet above the railroad-tracks.

The short time and small outlay necessary in opening a drift mine frequently results in the location and arrangement of the surface works for the immediate needs of the operation, and without a view as to the possible requirements of the future.

2623. If the arrangements and their location are of a temporary nature, no serious drawbacks will be experienced, as they can be readily removed or altered, if improvement is found necessary, with increasing and more extended operations.

If, however, one structure after another is added and enlargements made to satisfy temporary needs, the arrangement is apt to assume a permanent character, which in the usual locations of drift openings, due to the limited ground between the hillside and the railroad-tracks, makes alterations and rearrangement of the plant difficult. More especially is this the case if, in addition to the mine plant, coke-ovens or coal-washing plants have been erected in the neighborhood, and are also to be enlarged.

Therefore, due consideration should be given to the planning of the arrangement at the start, so as to early provide for future possibilities. It is important in this respect that the mine opening be straight and properly located, so as to facilitate haulage.

Plenty of room should be allowed between the mine outlet and the tipple for tracks and sidings.

In the early operations, the tipple may be built on line with the drift when the ground is limited between them,

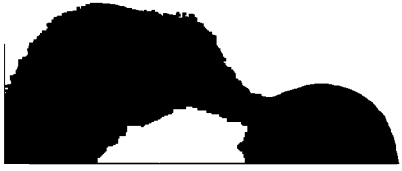

but is sufficient for the length of tracks needed at the opening of the mine.

If longer tracks are needed in the future, it may be necessary to erect the tipple at some distance to the left or right of the drift, and carry the tracks thereto, with curves at the outlet and also at the tipple. It is well to keep in view this possible change in the arrangement, so that permanent structures will not be erected on the ground that may be needed for this purpose, and so that shops and buildings erected conveniently with respect to the first arrangement will also be handy to any future improvement.

ARRANGEMENT OF TRACKS.

2624. A general arrangement of the surface works at a drift mine is given in Fig. 962. The tracks from the outlet to the tipple and at the tipple are shown developed for a system of rope haulage, and for a case where there is considerable landing room between the outlet and the tipple, which permits of locating the haulage engine on line with the drift and only slightly curving the tracks.

The tracks may be made straight and the engine room built beneath the trestle, or if the ground is limited between the drift and the tipple, the engine could be located to one side of the drift and ropes led thereto, by curving horizontally at sheaves erected at a proper point.

The same system of tracks could be used for mule haulage, although a complete arrangement of two tracks, one for loaded cars and the other for empty cars, would be sufficient in this case.

2625. The principal feature in the arrangement of the buildings at a drift mine is the requirement that they be generally located along the contour of the hillside, with very narrow and long yard room. In Fig. 962 the arrangement shows the buildings, yards, and outside tracks on a level with the haulage tracks from the mine.

The boilers and engines should be built either on a level with the mine or railroad-tracks, as the extent and slope of

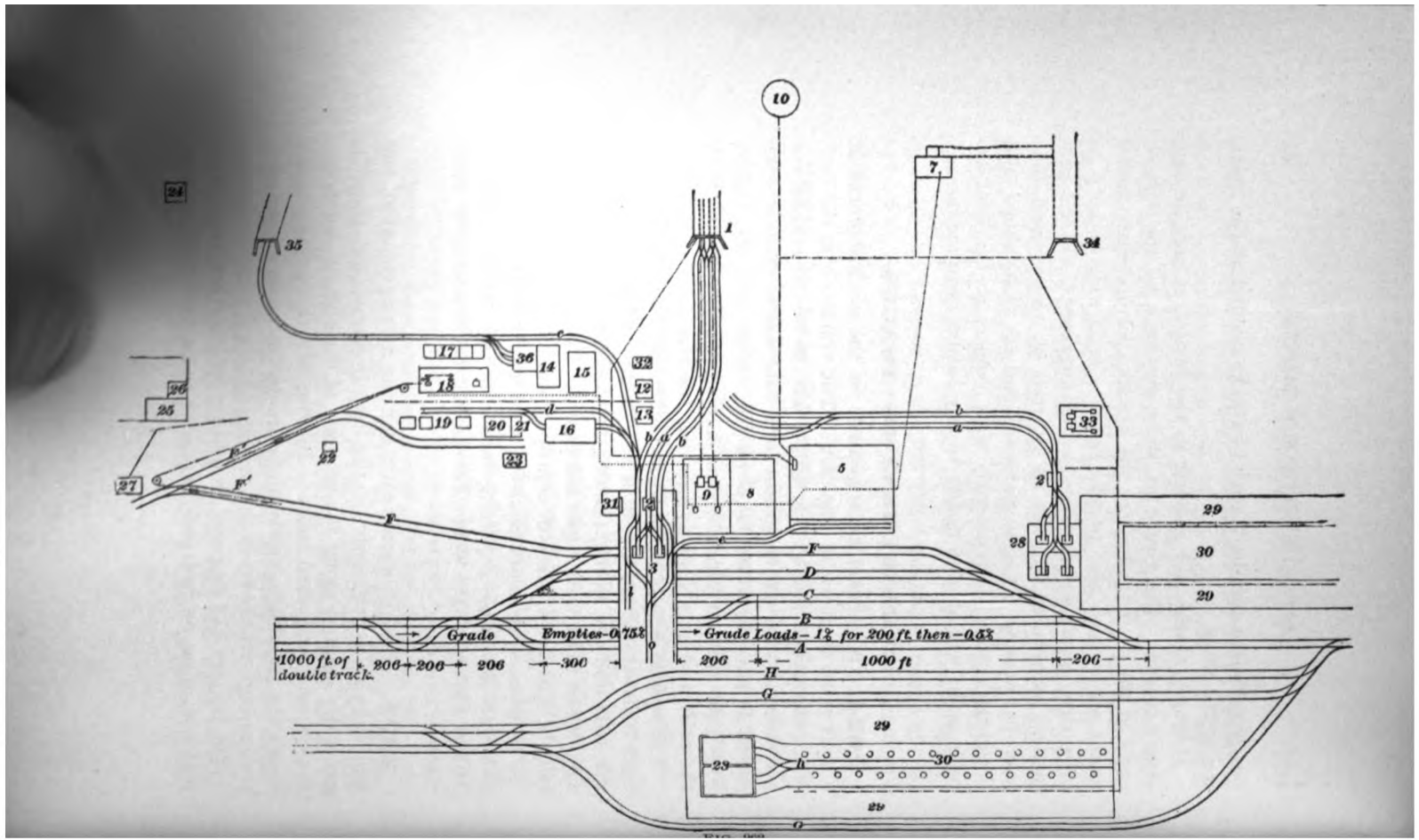

Grade
Empties-0.75%
Grade Loads-1% for 200 ft. then -0.5%
1000 ft. of double track.
206
206
206
300
206
1000 ft
206

the ground as well as other conditions may require. But in any event they should be located near the one or the other.

If the conditions are such as to permit of all the buildings being erected at the yard level of the mine, it will prove the most satisfactory for concentration of the work. This can generally be arranged if small amounts of supplies and material are received by railroad and their handling is not a difficult matter, and if lumber, props, etc., are cut on the surface of the property, or near by, and are delivered close to the mouth of the mine by teams or a tram-road. Or, if the material and supplies for the mine are received mostly by railroad, an inclined road can be built, as shown in Fig. 962 at *F'*, for hoisting railroad-cars to the mine yard level.

2626. As in other general plans, there are more improvements shown in Fig. 962 than are generally necessary at any one mine. The object of this is to show how any of them that may be necessary can be arranged. The mouth of the drift is shown at *1*, the scales at the tipple and also at the coal-bins for coking coal are shown at *2*, the main tipples for shipping coal at *3*, the haulage engines at *9*, the fan at *7*, the compressed-air or electric plant at *8*, and the boiler house with coal-bin in front at *5*. The tank for the water-supply is shown at *10*, and the supply-pipe lines from it are shown thus ——·——·——. The mine office is shown at *12*, and the lamp house at *13*. The machine-shop *14*, blacksmith shop *15*, and carpenter shop *16* are shown in close proximity to each other and to the sawmill *18*, sawed-lumber yard *17*, timber-yard *19*, and the iron and pipe shed *23*. The locomotive, electric or air, that may be used in distant workings beyond the rope haulage is housed in a building *36* adjoining the machine-shop. It enters the mine through opening *35*, over track *c*. The supply house *20* and supply-clerk's office *21* are shown together. The oil house *22* is shown at a point on the line of the supply track *F'*, convenient for the reception of oil from railroad-cars. The stable *25*, wagon and harness house *26*, and the hay and feed storehouse *27* are located close together. The airway

for the mine is shown at *34*. The coal-bins for the two banks of coke-ovens are shown at *28*. The ovens are marked *30* and the coke wharves *29*. At *33* is located a hoisting-engine to hoist cars up an incline from the drift to the level of the platform on the coal-bins, if the topography makes such an arrangement necessary. The weighman's office is marked *31*. The ropes from the haulage engines *9* to the drift mouth are shown thus ——··——··——, as are also those from the sawmill to the inclined tracks *F'*, over which railroad-cars loaded with supplies can be raised to the level of the storehouses, yards, and shops. The steam-pipes are marked .....

The mine-car tracks are marked as follows: *a*, loaded tracks from drift mouth to tipples or coking-coal bins; *b*, empty tracks from tipples and coal-bins to drift mouth; *c*, track to blacksmith-shop, machine-shop, sawed-lumber yard, etc.; *d*, track to carpenter shop and timber and rail yard; *e*, track for boiler coal; *o*, track for rock cars to dump; *l*, track on which cars of dirty coal are switched; *h*, track for larries to coke-ovens. The railroad-tracks are marked as follows: *A*, empty shifting tracks; *B*, lump-coal track; *C*, nut-coal track; *D*, slack track; *F*, material or supply track, which is inclined at *F'*; *G*, coke-car loading tracks, and *H*, empty coke-car shifting track.

2627. Conditions may prevail which make it most advantageous to locate the material yard, storeroom, etc., near the railroad-tracks to avoid delay in unloading material, and to locate the carpenter, blacksmith, and possibly the machine-shop at the mine yard level.

Any hauling of material from the railroad to the mine can then be done over a wagon road or inclined tracks for railroad or mine cars, as may be found convenient.

The stable and feed room should be located at such a point as will be convenient for the traveling of mules to and from the mine, without their having to pass over any haulage roads that are fully occupied with cars and ropes. This is especially the case if the ground is steep back of the drift

mouth, and a roadway can not be constructed there from one side of the drift to the other.

2628. Figs. 963 and 964 show arrangements of tracks and engine where the space between the drift mouth and the tipple is limited. Fig. 963 shows the engine located to one side of the drift, and a device for storing or holding empty

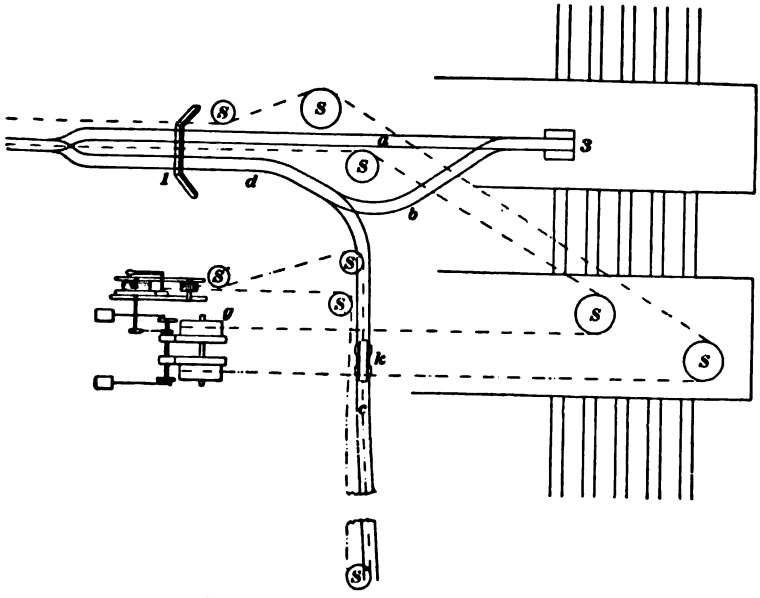

FIG. 963.

cars outside at a plant where the locations of the drift outlet and tipple have become fixed.

In this case the loaded track *a* has a fall of 1 ft. in 100 ft. from the drift mouth to the tipple *3*, and the empty track *b* has a similar fall from its junction with the loaded track *a* to its junction with the storage track *c*. This storage track *c* has a fall of 16 in. per 100 ft. away from the drift mouth from the point *d*. By referring to the figure, it will be seen that the tail-rope haulage is operated by the ropes running around the large sheaves *S*, and that there is an endless-rope

mechanism attached to the engines by a friction-clutch which actuates the endless rope around sheaves S', by means of which and the dummy k the empty trip is made up.

2629. Fig. 964 shows a tipple located at some distance and to one side of the line of the drift, so as to provide necessary length of tracks outside.

In this case the drift mouth is shown at *1*, the tipples at *3*, the tail-rope engines at *9*, and the boilers at *5*. The sheaves around which the main ropes run are marked *s*, and

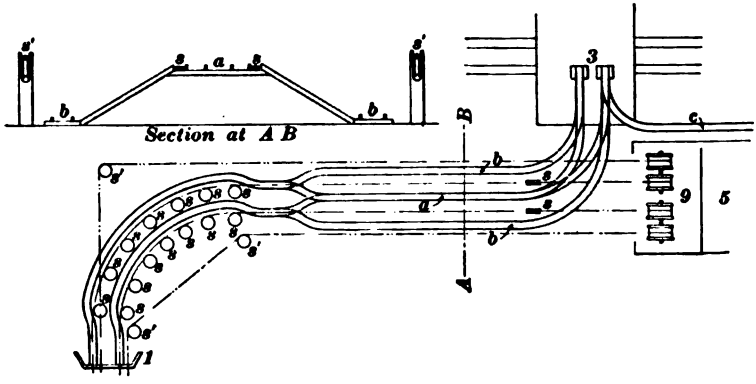

FIG. 964.

those around which the tail-ropes run are marked *s'*. The loaded tracks from the drift mouth to the tipples are marked *a*, the empty tracks *b*, and the track to the shops and yard *c*.

The surface works should be located handy to the return empty tracks, so that cars can be switched out and back without crossing the loaded track.

In the case of the two outside tracks being the empty ones, as shown in Fig. 962, cars from one side can be shifted to the desired side by switching around the tipple.

Tracks for coal to the boiler should also be provided. In Fig. 962 the coal to the boilers and the rock is switched out on the track between the two tipples, and the coal is back-switched to the boilers over track *e*.

SURFACE ARRANGEMENTS AT A MINE OPENED BY A DRIFT ON THE MOUNTAIN-SIDE ABOVE THE TIPPLE LEVEL.

2630. The main features connected with a mine opened above the level of the tipple are in the arrangements for lowering the coal from the mine outlet to the dumping platform.

Sometimes the coal is dumped from the cars at a tipple on a level with the mine outlet into a long chute reaching to the loading point below. The arrangement of the surface works around the mine outlet in this case would be similar to that of those connected with a drift mine.

The use of a long chute is, however, objectionable, as the coal grinds and is broken by the force with which it strikes the chute and gates.

A height of about 25 to 30 feet above the tipple tracks should be the minimum for the adoption of a gravity plane when its length is 300 feet or more.

If the height or the distance is less than this, a trestle or embankment can be built out some distance towards the tipple, and the cars or coal can be lowered vertically to the tipple, as described farther on.

2631. A general arrangement of a mine opened with a gravity plane is shown in Fig. 965. Inclined planes may be of single track or of 3 rails, with passing points half way up. In Fig. 965 a double-track plane is shown branching into two outside empty tracks *b*, and a middle track for loaded cars *a* at the head. At the foot of the plane, the loaded cars land on the outside tracks *a*, and the empty cars are taken up from the middle track *b*.

From one to six cars are usually lowered at a time. More can be lowered. This depends considerably upon the length and grade of the plane. Where planes are long and much time required to lower cars, more are put in the trip than when short planes are used.

The arrangement of the tracks at the top is for haulage by a compressed-air or electric locomotive, or if a long haul

exists from the top of the plane to the mine mouth a steam-locomotive can be used between those points. If rope haul-

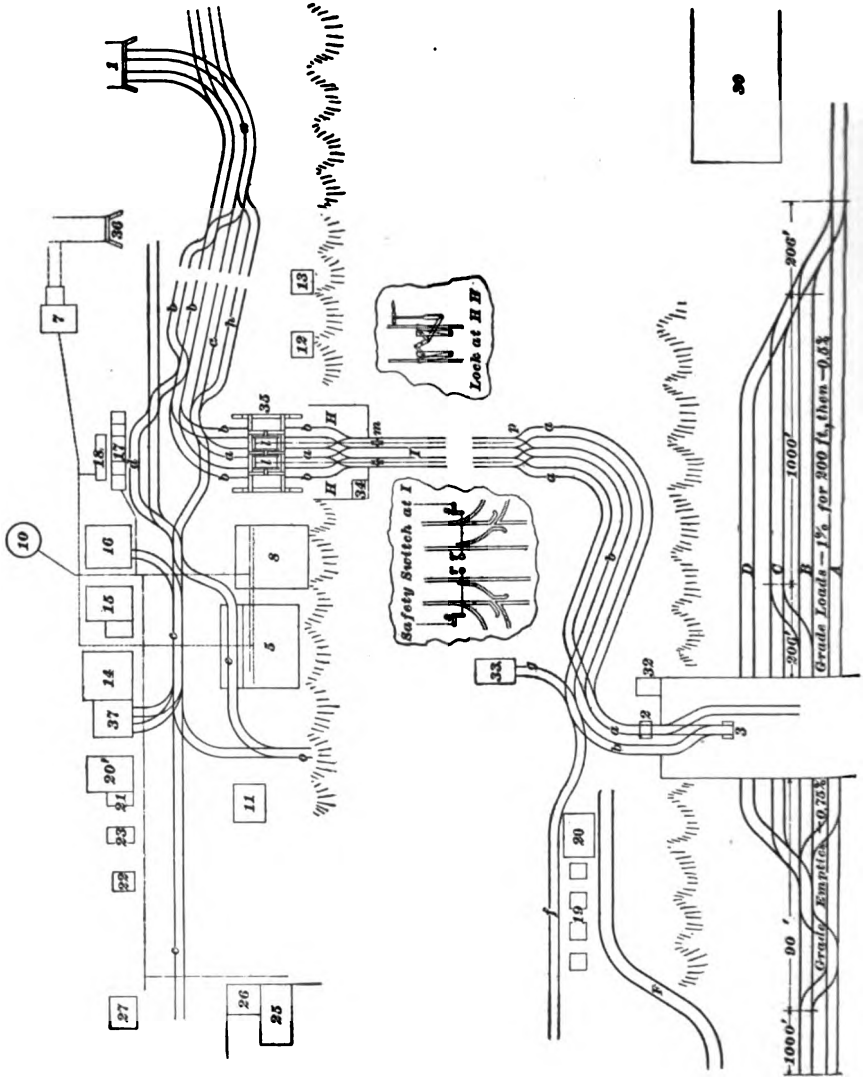

age is desired, the track arrangement of the top can be made similar to that at a drift mine. The empty return

track should be planned on the side convenient to the shops and buildings. A turnout can be planned as shown for running out loaded cars from the loaded track to provide coal to the boilers, and for running cars of rock to a waste dump.

Tracks should be arranged conveniently to the storerooms, material yards, etc., for running cars thereto that have been loaded at the foot of the plane and hoisted to the top. At the foot of the plane plenty of track room should also be provided for the accumulation of loaded and empty cars. This is of advantage in case of accident on the plane, as loading can continue with the coal that has collected, and many little delays may be thus overcome that would otherwise interfere with a large output.

If the conditions are favorable to planning the incline so that the loaded cars will automatically be discharged at the tipple without disconnecting the rope, it is of advantage, unless the conditions require the employment of many hands at the foot of the plane.

The arrangement of the buildings around the mine opening should be similar to that of a drift mine, except that the tipple platform and tracks should be removed to the foot of the plane, at which point the weighing is also generally done. If the ground is steep, the yard room will be narrow, and it will be necessary to locate the buildings in a line along the contour of the hill. The engine and boilers may be located on a lower level, and the ground somewhat excavated for the purpose, or they may be raised to the yard level with foundation walls. The boiler room should be located conveniently for the disposal of ashes.

If many supplies, lumber, and material are received by railroad, it may be necessary to provide a storehouse and yard room near the railroad, from which place they can be moved up the plane in empty cars as time will permit, unless it is done by teams over a wagon road.

Lumber, props, etc., may be cut on the property, or in the neighborhood, and be delivered by teams or tram-road to the mine mouth, in which case the lumber-yard will be located above.

2632. By referring to Fig. 965, it will be seen that coal from the drift *1* is taken over the track *a* through the wheel house *35*, under the drums *l*, when the proper rope is attached, and the cars run down the gravity plane on either track, hoisting the empty cars up the other. The drums are controlled by a brakeman in the shed shown at *34*. From the foot of the plane *p*, the loaded cars are run to the tipple *3*, passing over the scales *2*, by means of track *a*. The weighing is done by the weighman in his office *32*. The empty cars are returned to the drift mouth over tracks *b*. Track *h*, at the head of the plane, is intended for the accumulation of about two trips of loaded cars. The haulage is accomplished by a compressed-air or electric locomotive, which is housed in building *37*. Sawed lumber from the yard *17* adjoining the sawmill *18* is transported to any part of the plant over track *d*. Track *c*, with its branches, reaches the carpenter shop *16*, the blacksmith shop with tool-rack annex *15*, the machine-shop *14*, locomotive house *37*, supply house *20'*, with supply-clerk's office *21*, the iron and pipe shed *23*, and oil house *22*. Rock cars are taken to the rock dump over tracks *c* and *o*. Coal for the boilers is run over track *e*, which is continued on to track *o* for the removal of ashes.

On the platform at the head of the plane, at the points *H*, *H*, are locks actuated by levers to prevent cars running to the head of the plane. A plan of one of these locks is shown on the right of the plane. On the plane at *I* are safety-switches controlled by the brakeman in shed *34*. A plan of these switches is shown on the left of the plane. In the event of a runaway car, the brakeman throws a convenient lever, which removes the tension from the rope *s*, and allows the weight *r* to throw the switch so that the runaway car will be thrown off the plane. At the foot of the plane are located a small repair-shop *33*, to which crippled cars are run over track *g*, a receiving house for supplies *20*, and a timber and rail yard *19*. The supplies, timber, and rails are received from railroad-cars on track *F*, and are sent to any part of the plant over mine-car track *f*.

The fan is shown at *7*, with an underground connection with the traveling and air way *36*. The tank for water-supply is shown at *10*, with supply pipes ——·——·—— running to various points. The wash-house is shown at *11*, the mine office at *12*, and the lamp house at *13*. The compressed-air or electric plant is shown at *8*. The stable *25*, wagon and harness house *26*, and the hay and feed storehouse *27* are shown in the upper left corner of the plan. The powder house is not shown. It may be located in any safe place, 1,000 feet or more from the other buildings. The tracks shown by dotted lines near the drift mouth are intended to show connections with other distant productive openings. In case the level ground from the foot of the plane to the railroad-tracks is not limited, the tracks to the tipple can be continued straight from the foot of the plane, instead of deflected as shown on plan. The location for a coke-oven plant is shown at *30*. The shipping tracks are similar to those shown in previous plans: *A* is the empty shifting track, *B* the lump-coal track, *C* the nut-coal track, and *D* the slack track.

2633. A circular saw will not be needed if timber is delivered ready cut. If lumber is to be cut from standing timber, it may be necessary to erect the sawmill at some distance from the mine. In some mines opened with gravity planes, the requirements for the operations are so few and simple that most of the buildings are located at the foot of the plane, a blacksmith shop and a few supplies being located at the top. The mule stables are sometimes located at the foot of the plane.

In the event of all the buildings being erected below, and it is desired to erect a rope-haulage plant, it may be placed at the foot of the plane, and the ropes be led up to and into the mine opening. If the haulage is to be done by locomotives, and there is other machinery needing attention and repairs, the surface buildings are more conveniently arranged around the top of the plane.

2634. Where the hillside is very steep, the cars of coal can not be run on the inclined track of the plane, as some of the coal would spill out of the car. It depends upon how full the cars are loaded as to what will be the maximum inclination they will run on without spilling. Cars loaded above the top should not be run on an inclination of much over 15°. Cars loaded level full may be run on an inclination of 20° for short distances, but for these and steeper

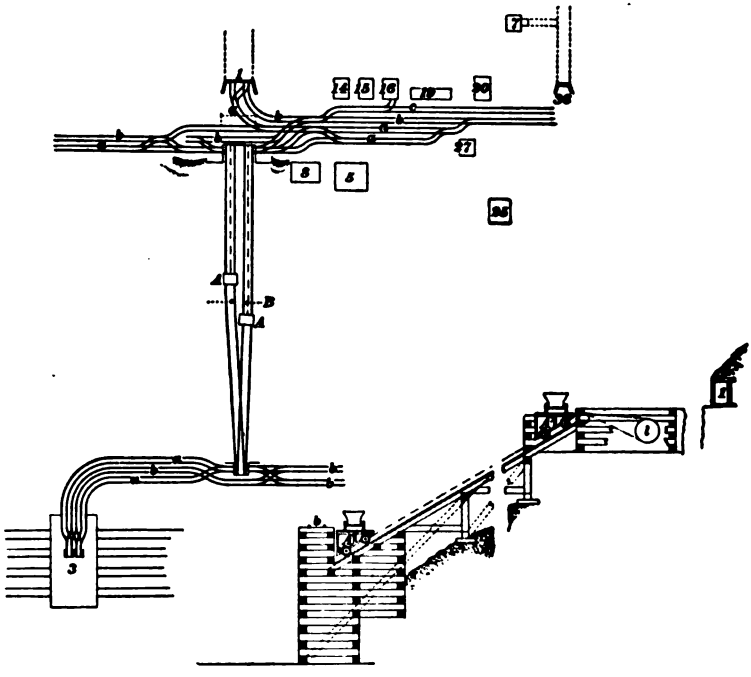

FIG. 966.

grades a device known as a **dummy**, or platform car, is used, on which the cars are lowered. This is shown in plan and profile in Fig. 966. In consists of an inclined truck *A*, built on the same angle as the plane. The car rests level on this in its movement on the plane. The arrangement of the tracks for handling the loaded and empty cars on and off the dummy is shown in the same figure. At the top it is

necessary to first remove the empty car before running the loaded car on. The loading at each side of the plane is done at separate opposite landings.

The dummy tracks are made to converge after passing the mid-point of the plane *B*, so that at the foot of the plane they have the same landing, and the empty cars are pushed on the dummy as the loaded cars are pushed off. This is done by having the two inclined tracks come together at the foot of the incline without passing switch rails, but so that their centers are about 4 inches apart. This necessitates that the platform of one dummy extend 4 inches farther towards the landing on the loaded side below than that of the other dummy. The outside rails of the dummy tracks must be slightly elevated after passing the mid-point of the plane.

If there is sufficient room above and below, the mine-cars can be run on and off the dummy in the same direction as the plane, that is, by tracks at right angles to those shown in Fig. 966, so that the amount of back-switching will not be so great above.

It will not be possible in this case to remove the loaded cars at the foot of the plane from one side and place the empty cars on from the other.

2635. In the plan shown in Fig. 966, the mouth of the mine is shown at *1*, with tracks for loaded cars *a* and empty cars *b* leading to and from the head of the plane. The drums, shown in profile at *l*, are not shown on the plan, as they are under the platform. The fan *7* is shown in connection with the airway and traveling way *36*. On the plane the dummies, or platform trucks, are shown at *A*, *A*, and the middle point of the plane where the tracks begin to converge is shown at *B*. The tipple *3* is shown to the left of the foot of the plane, with loaded tracks *a* and empty tracks *b*. The air-compressing or electric plant is shown at *8*, with the boilers *5* adjoining. The stable *25* and feed house *27* are shown on the same side of the tracks as the boilers. On the other side of the tracks are shown the machine-shop *14*, blacksmith shop *15*, carpenter shop *16*, material yard *19*, and

supply house *20*, all reached by mine-car track *c*. In the profile the drift mouth is shown at *1*, the drums, under platform, at *l*, one dummy *A* at the top landing and the other in the pit at the bottom.

2636. In Fig. 967 is shown a device, known as a **barney**, for lowering loaded and raising empty cars without attaching a rope to the cars.

The barney *A* is a truck running on a narrow track between each of the inclined tracks. A large timber forms the body of this truck, and the ends of the ropes are attached to a barney on each track. A loaded car is pushed

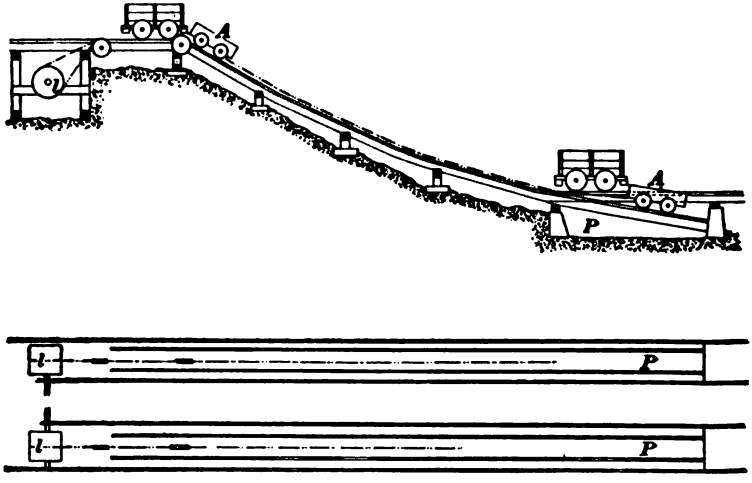

FIG. 967.

against the barney at the top, which has landed at the knuckle, and the weight of the car against the barney causes both to move down the plane, and the speed is regulated by the brake on the drums *l*. As they descend, a car is moved up the plane on the other track with the barney behind it.

When the car and barney reach the bottom of the plane, the barney goes beneath the level of the other track into a pit *P*, allowing the loaded car to pass over it. The barney remains in the pit to be drawn up behind the next empty

car when it is pushed in front of it. This arrangement avoids delay in coupling and uncoupling the rope from the car.

If the mine-car must be moved some distance after reaching the bottom of the plane, this arrangement is of advantage, as with its momentum, after being released by the barney, it will run several hundred feet on a level. In this arrangement a counterweight should be caught up by the barney landing at the top of the plane, to check its momentum.

2637. If it is desired to lay a 3-rail inclined plane, on account of length or the cost of construction of wide embankments, or on account of the arrangement of landings at the top or bottom, such a plan can be used as is shown in Fig. 968, which also shows a system of tracks at the bottom, where the cars arrive and depart in trips. This operates as follows:

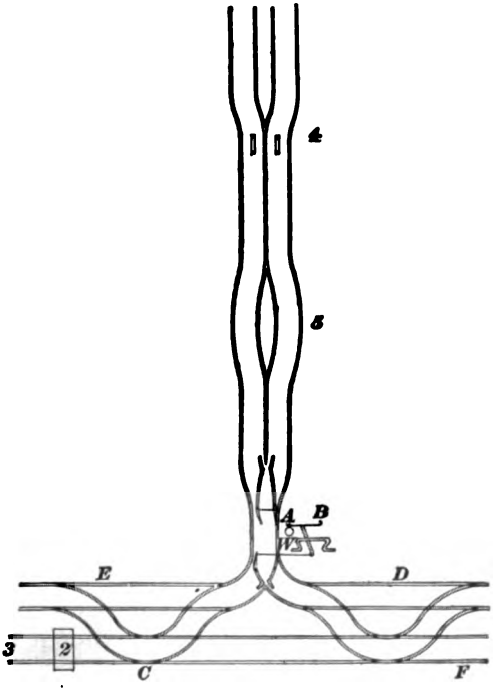

FIG. 968.

When the weight on the switch-stand *W* is placed at *A*, the loaded cars are lowered to the siding *C*, and the empty cars are taken up the plane from the siding *F*, while a trip of empty cars is coming in at the siding *E*.

When the weight is at *B* on the switch-stand, the loaded

cars are lowered to the siding *D* and empty cars are taken up from the siding *E*, while a trip of empty cars is coming into the siding *F*. In Fig. 968 the knuckle at the head of the plane is shown at *4*, the mid-distance and divergence of rails into double track is shown at *5*, the scales are shown at *2*, and the tipple at *3*.

LENGTH AND GRADES FOR INCLINED PLANES.

2638. For lengths up to 500 ft. the grades should not be less than 5% for a weight of 8,000 lb. in the descending and 2,800 lb. in the ascending load, or 5½% for 4,000 lb. descending and 1,400 lb. ascending load.

For planes from 500 to 2,000 ft. the grades should be from 5% to 10%, depending upon the loads. For a plane 2,000 ft. long and 10% grade, 4,000 lb. descending load will hoist a 1,400 lb. empty car.

There are instances in which 25 and 30 loaded cars will descend a 1¼% grade, but where planes are lighter than 5% grade the empty cars will usually have to be hoisted on a plane operated by an engine, in which case the tracks can be single or double.

An inclined plane should be slightly concave in profile, and steeper at the top than at the bottom, except where a dummy is used, which necessitates that the grade be continuously the same on account of the dummy being built only for one angle of inclination, and it therefore can not be operated on a plane with much variation in inclination.

COAL-HANDLING APPLIANCES WHERE PLANES CAN NOT BE USED.

2639. The height for a tipple above the railroad-tracks has been given at 20 to 35 feet, although it may be a few feet higher if the coal is hard enough and the screens are suitably arranged.

Where the coal outcrops on the hillside at a greater elevation than this and up to 45 or 65 feet above the railroad-

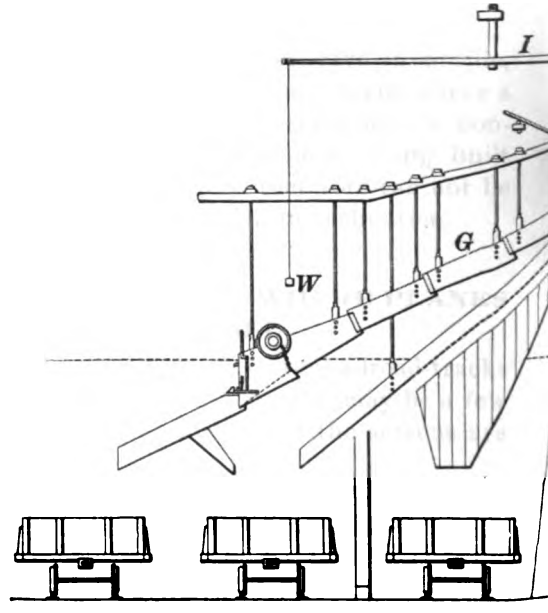
I
G
W

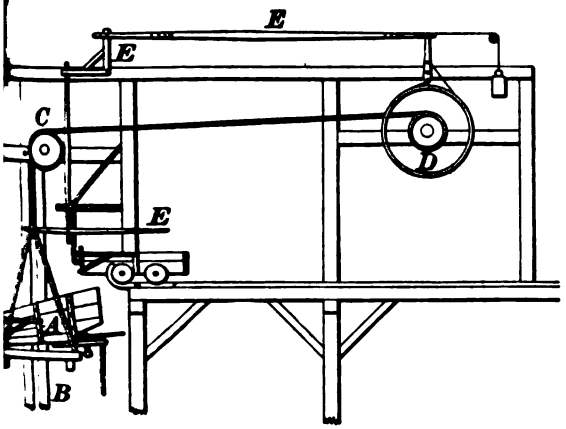
E
E
C
D
E
A
B

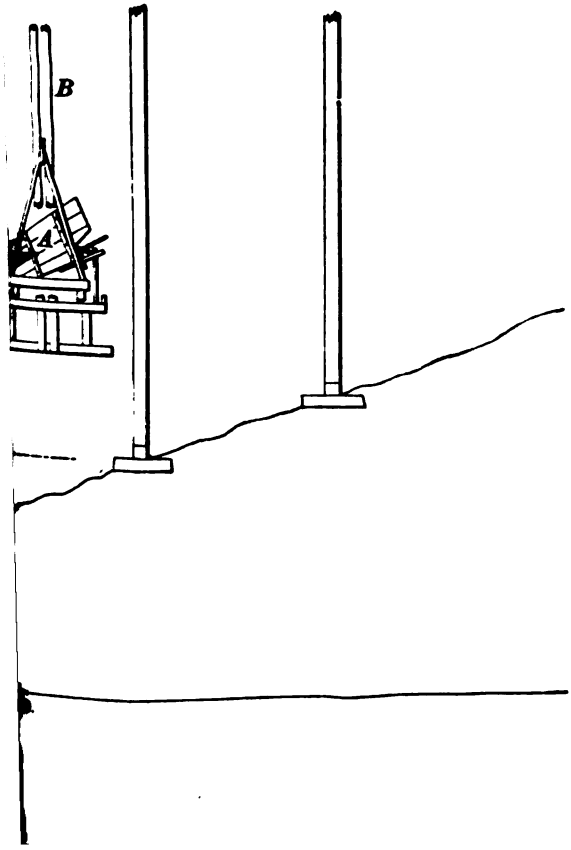
B
A

tracks, the mine should be opened, if possible, at some distance from the location for the tipple, so that the cars can be brought from the mine outlet over a tram-road 500 to 1,500 feet long, with a 1% or 2% down grade to the tipple landing.

If this plan is not feasible, and if, as mentioned under Gravity Planes, the distance, the height, and the length of plane are not sufficient to warrant the construction of the latter, then the following devices should be used for handling the coal to the tipple :

2640. Fig. 969 shows an arrangement suitable in case either the elevation is insufficient to warrant an inclined plane, or the hillside is too steep to permit of its construction, even if there is sufficient height. This consists of one or two baskets *A*, operating vertically in guides *B* between the upper and the lower landing. The arrangement is similar to that of a shaft hoist, but simpler, as the descending load furnishes the operating power.

The coal is dumped into the basket from the mine-car at the upper landing. This weight then causes the descent of the basket and load, which is suspended by a rope led by an overhead pulley *C* to a drum *D*, with a brake *E* for controlling the descent. The descent of the basket and load raises either a counterweight or a second empty basket. When the basket reaches the lower landing, which corresponds to the tipple landing, a front gate to the basket *F* is opened, and the load is dumped automatically into a chute *G* provided with screens. The basket then rights itself as the brake is released, and the empty basket is caused to ascend by the descent of the counterweight, or a second basket with its load. This device requires few hands at the lower landing, and is suitable where the coal is not seriously injured in dumping.

The automatic device for opening the front gate of the basket consists of a hooked bar *H* attached to a pivoted bar *I*, which is balanced and held in position by the weight *W*.

If the coal is soft, instead of dumping into a basket at the tipple landing, the car of coal should be lowered by a device, shown in Fig. 970, to the tracks of the tipple landing, and from there run to the chutes for dumping.

2641. In Fig. 970 the loaded cars are run onto the cage *A*, and the empty cars at the tipple level are run onto

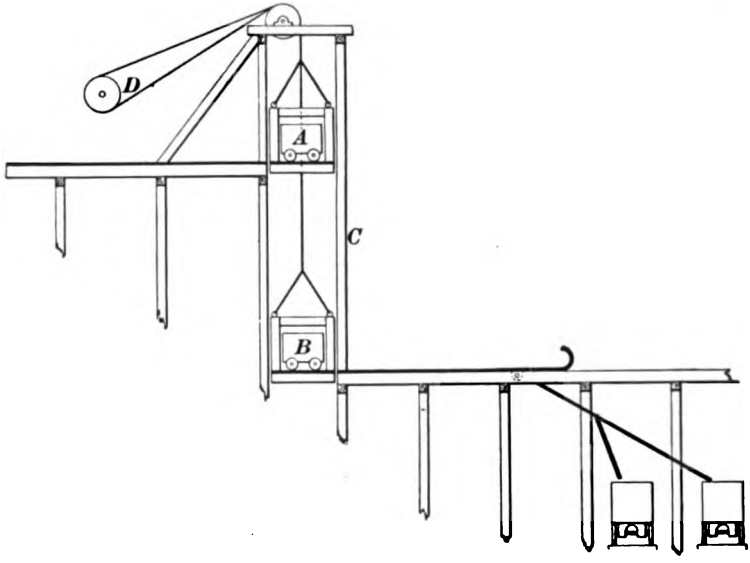

FIG. 970.

the cage *B*. By means of the brake drum *D*, the loaded cage *A* is lowered down one side of the vertical hoist *C*, and its weight raises cage *B* to the top.

These devices are best adapted where the height of the upper landing is at least 20 to 30 feet above the tipple landing, and may be used for greater height; although, if the elevation much exceeds 50 or 60 feet above the lower landing, or 70 to 85 feet above the railroad-tracks, even on a steep hillside, it will be found preferable to introduce an inclined plane operated with a dummy.

ARRANGEMENT OF TIPPLE STRUCTURE AND FITTINGS.

OPERATIONS AT THE TIPPLE.

2642. The cars of coal from either a shaft, slope, drift, or gravity-plane mine, after being run over tracks more or less long, are delivered at a tipple, where the coal is dumped into a chute, with or without screen bars, or into a bin. The loading into railroad-cars or other means of transportation may be controlled by gates in the chute, or baskets, which check the force of the coal as it descends the chute, and lower it gently into the cars, thus reducing breakage.

The weighing may be done either before the mine-car is dumped on the platform or after it has been screened, and the lump coal held in a basket connected with scales; or it may be weighed in the railroad-cars.

It may also be necessary to provide facilities in the tipple to clean the coal by picking out the slate from the lump coal or screenings, or both.

If there are cars of rock from the mine to be unloaded outside, tracks may be necessary at the tipple to run these cars to waste dumps, or else to a chute for loading into railroad-cars, to be carried away as waste.

2643. The arrangement of the fittings and devices in the tipple structure can best be described under the following operations at the tipple:

1. Dumping coal from the mine-cars.
2. Chuting the coal.
3. Screening coal.
4. Loading into railroad-cars.
5. Weighing.
6. Cleaning coal.
7. Handling of rock.

DUMPING.

2644. Dumping may be done in tipples of three classes, viz., in push-back tips, in revolving or oscillating cradles, or in cross-over tips.

PUSH-BACK TIPS.

2645. Fig. 971 shows an ordinary form of tipple in which the car of coal is run to the tipple horns, and after being dumped it is pushed back to a switch before the next load can be moved to the tipple. The axle *A* on which the tipple horns *B*, *B* turn is slightly back of the center of gravity of the loaded car, so that the force with which the

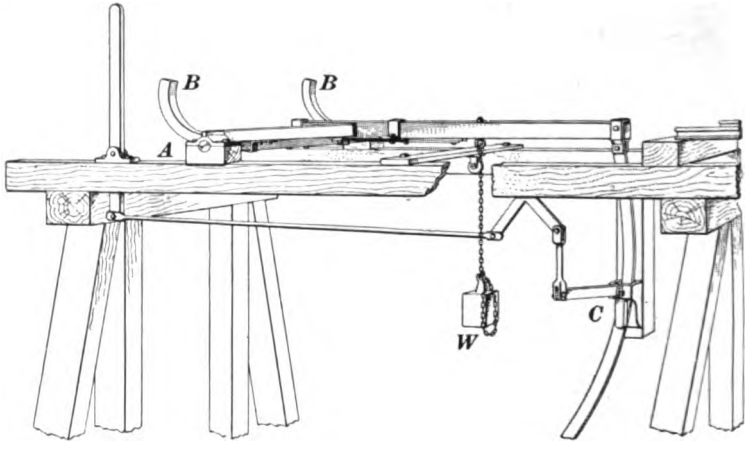

FIG. 971.

load dumps is sufficient to raise a counterweight *W* at the rear of the tipple. As this raises and the car dumps, a brake *C* is applied by foot or hand to hold the counterweight and tipple in position until the car is empty.

The brake is then released, and as the position of the center of gravity of the empty car and raised counterweight is then back of the tipple axle, the weight of the counterbalance returns the empty car and tipple horns to a level position.

2646. Fig. 972 shows a similar tipple provided with buffer springs *S*, *S*, which take up the jar caused by the wheels of the loaded car striking the horns *B*, *B*. This is known as the Phillips automatic push-back car tip. The recoil of the springs checking the loaded cars serves to push back the empty car, after it is dumped, through the medium

of the arms *C*, *C*, against which the wheels strike. Sometimes the axle on which the tipple turns is elevated so as to be at a point a little lower than the center of gravity of the

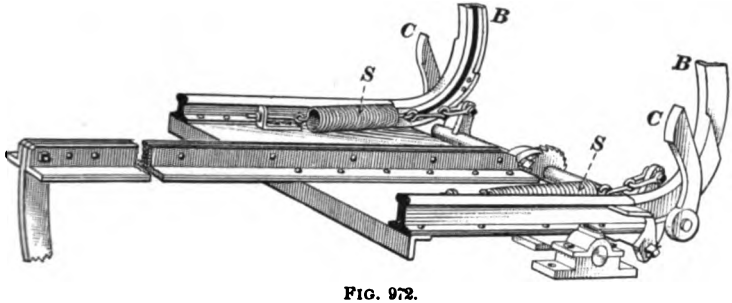

FIG. 972.

car when loaded, and a little above it when dumped. This does not necessitate the use of counterweights.

REVOLVING OR OSCILLATING TIPS, OR CRADLES.

2647. These may make a full revolution or part of a revolution and return. They may turn either in the direction of the tipple or at right angles to it. Fig. 973 shows a usual form of this class. The door *A*, shown on the top of the tip, or cradle, is for a special case in releasing very soft coal to reduce breakage in handling. By referring to Fig. 973, it will be seen that the mine-car is run into a box-like arrangement which revolves on the axles *C*, so set that the center of gravity of the loaded car is above the axles. The overturning of the box is regulated by the brake-wheel *B*, assisted by the counterweight *W*. When the coal has been dumped into the chute *D* and the brake-wheel has been released, the dump rights itself automatically. Cars dumped in this style of cradle do not need end gates.

The system of tracks where tipples like those already mentioned are used may be similar to any of the arrangements already shown for shaft, slope, drift, or gravity-plane mines. These plans are interchangeable for mines opened either way, according to the conditions and requirements.

As time is required in pushing back an empty car from the tipple before another loaded car can be pushed there, it

is necessary, if speed is desired, to provide two tipple horns, fed by one or two loaded tracks, and an empty track, so

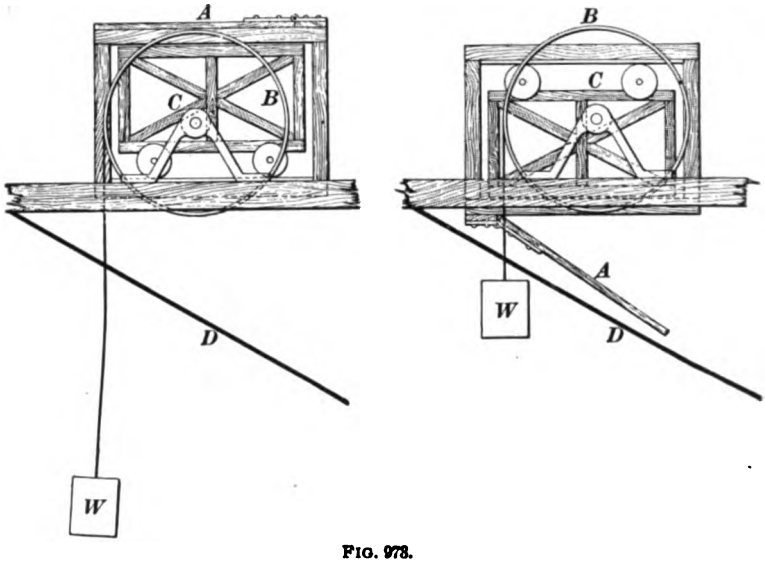

FIG. 973.

that the empty car can be quickly moved onto it after dumping, to make room for the next loaded car.

CROSS-OVER TIPS.

2648. In tipples of this class, the cars of coal after being dumped pass beyond the tipple over rails spanning the dump hole to an empty track and return to the mine by a switchback, or by making a full or half circuit.

The arrangement of the tracks for these tipples is different from that of the push-back or the revolving type. Generally, one tipple of this kind is sufficient, requiring but one loaded and one empty track.

2649. In Fig. 974 is shown an arrangement of tracks for cross-over tips. The profile at the top shows that the loaded cars approach the dump *D* by gravity over a 1.66% grade, and the empty cars leave the dump on a 6.25% grade for a short distance. They then run to the end of the tipple

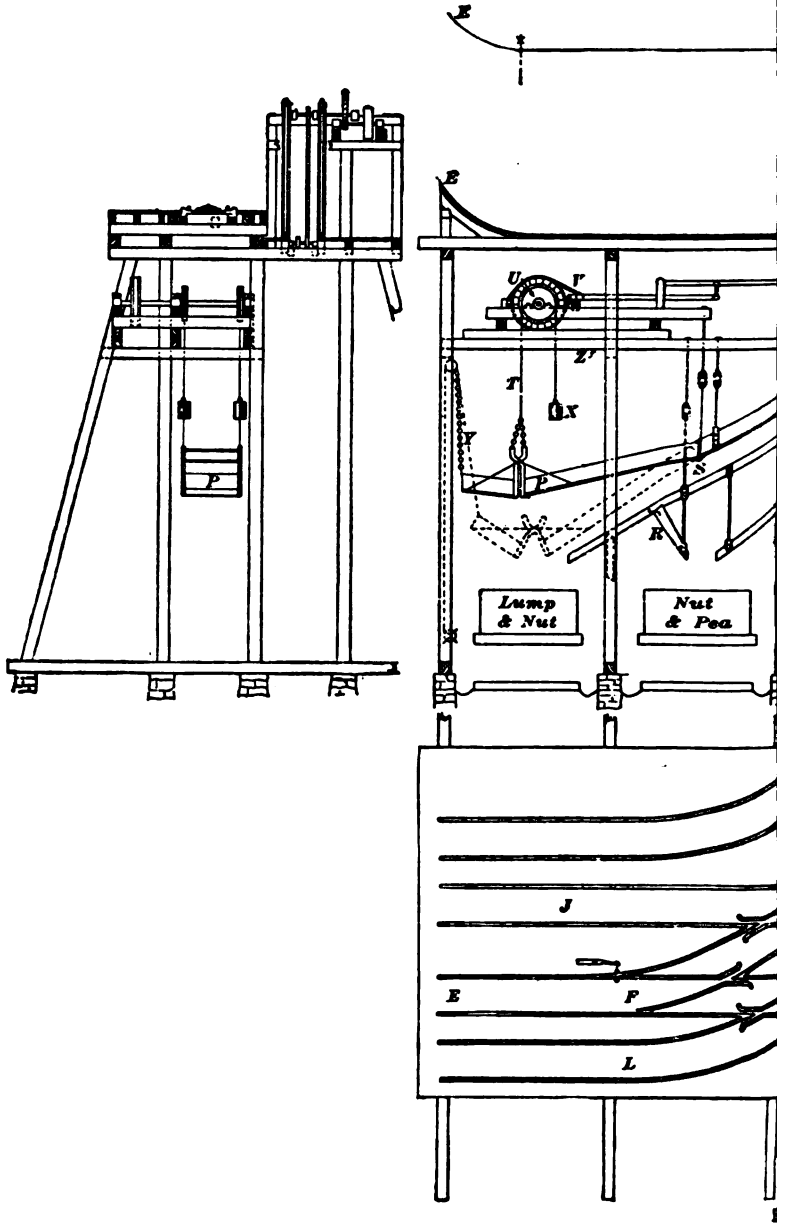
E
E
U
V
Z'
T
X
Y
P
N
K
Lump & Nut
Nut & Pea
P
J
E
F
L

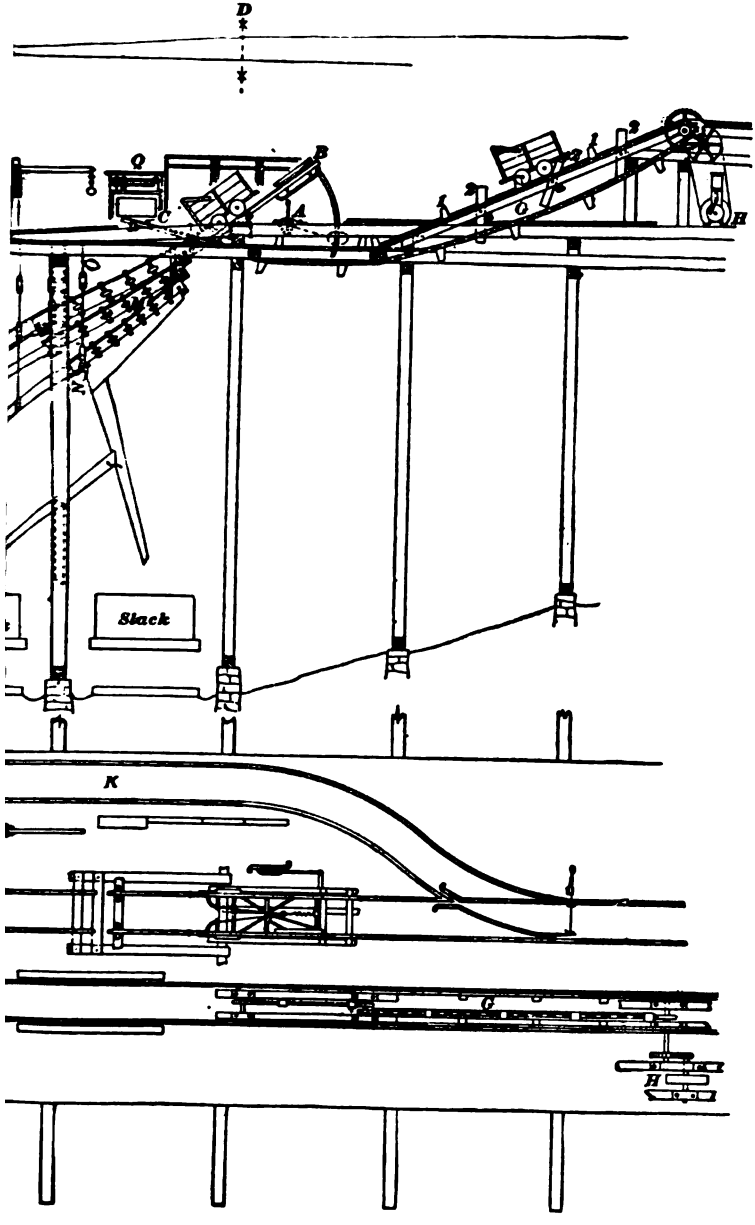
D
Q
P
A
O
H
N
Slack
K
G
H

platform over a level track, till, near the end, they run part way up a short incline *E*. Running back down this, they cross the spring switch *F*, shown on plan, and run down a 1% grade to the foot of an endless-chain hoist *G*, which is run by the engine *H*. This hoist raises the empty cars to a sufficient height to allow them to run by gravity to the collecting point for empty trips. Crippled cars are passed by means of switch *I* to track *J*. Rock cars are run to a dump over track *K* and are returned from the dump over track *L*. The sprocket-chain used on the hoist *G* is supported on the plane by a bar of flat iron, over which it slides. The lugs *1* on the sprocket-chain move the car by engaging with a block bolted to the car, back of the axle. The stops *2* are pressed down by the bumpers of the car as it moves up the plane. When released, they prevent cars running down the plane.

2650. The principal tipples of this class are the Mitchell, the Wilson, and the Phillips. In these the loaded car comes to the tipple by gravity and is stopped by the horns of the car tip. Buffer springs may be provided at the horns or elsewhere to take up the jar caused by the speed of the loaded car. The tip brake *A* is then released and the contents of the car is dumped into the chute. A counterweight is raised as in ordinary tipples, the brake is applied, holding it up and the car in position until the car is empty. The brake is then released, and the car drops back to a level position while controlled by the brake.

The empty car remains in this position while a loaded car moves towards it. The wheels of the loaded car depress a tread rail *B*, which operates a system of levers, causing the tipple horns to spread out, or turn down and outwards, so as to clear and release the empty car, which runs by gravity off of the inclined track of the tipple and passes the horns before the rear wheels of the loaded car leave the tread rails of the horn spreader.

As the rear wheels of the loaded car clear the tread rail, springs cause the horns to come back to their first position to check the loaded car.

The empty car crosses the dump hole on hinged rails *C*, attached to the end of level rails at the tipple horns. The other ends of the hinged rails are free to slide when the car is being dumped, but making a butt joint with the permanent track beyond the dump hole for the passage of the empty car when released from the tipple. The rails are about 8 feet long.

The length of the tipple rails is about 11 feet, and the rail spreader about 4 feet long, though this length will vary, depending upon the length of the car.

The tread rail and horn spreaders, with their levers, are connected with the rails of the tipple, and raise with them when the car is being dumped.

2651. The Mitchell tipple is shown in outline in Fig. 974. The horns spread out by the passing of the mine-car over the tread rail. If cars are very wide, the hinge rails, instead of being attached to the end of the level rails of the tipple, are caused to spread outwards by levers and clear the width of the car.

2652. The Wilson tipple is shown in Fig. 975. In this

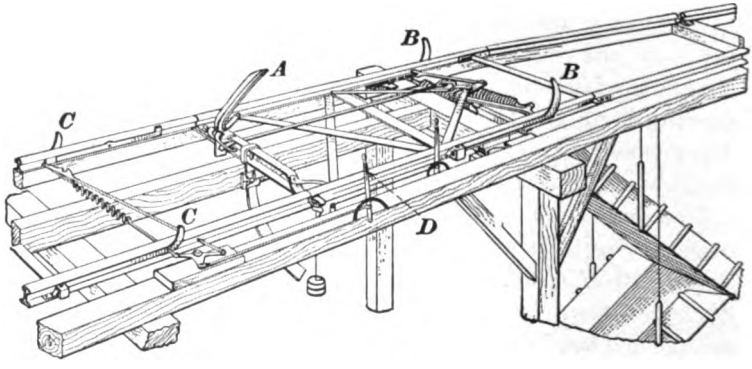

FIG. 975.

tipple the spreading of the horns *B*, *B* is accomplished somewhat differently. Here the bumpers and bottom of the car depress a lever *A* connected with the horn spreaders. The approaching loads are checked by a second set of

smaller horns C, C back of the tipple, opened by a lever D, and held open by the car passing over a tread rail long enough to permit the passage of the car before they close.

2653. Fig. 976 shows the Phillips automatic cross-over tip. In this tip the horns A, A roll outwardly, releasing the empty car by the passing of the loaded car over the tread rail, which operates the horns by a chain B working a system of levers.

The horns are pivoted in wrought journal-boxes. The axles C on which the horns roll out extend some distance

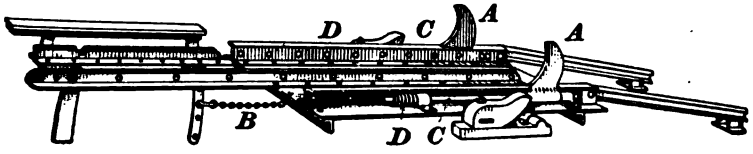

FIG. 976.

back along the outside of the rails of the tipple, and their rear ends are provided with special springs D to take up the jar caused by the loaded car striking the horns.

CHUTING.

2654. The coal is dumped into a chute which is made either short or long, as the tipple is at a small or a considerable height above the loading point.

Chutes are from 4 to 5 feet wide, with sideboards 1 to 3 feet high, supported between the posts of the bents forming the trestle supporting the tipple structure and platform. The chute bottoms are covered with $\frac{3}{16}$ inch to $\frac{5}{8}$ inch sheet iron or steel.

The angle of the chute required for the proper movement of the coal upon an iron or steel surface will vary from 26° to 29°, depending upon whether the coal is in lumps and dry, or whether the mine-run coal contains much fine coal. For small screenings the angle will vary from 30° to 33°, and possibly more if they are wet.

It is desirable to have the chute rigged to a windlass for regulating its angle, if there is much variation in these respects.

The chute at the loading point should be 2 or 3 feet above the railroad-car. By drawing a line from this point on the angle of the chute (29°), its intersection with elevation of the tipple platform will determine the location for the tipple. The center of the car tip should be located from 3 to 5 feet in advance of this point, so that when the car is dumped there will be a drop of 1 to 2 feet from the car to the chute, so that all the coal will run rapidly out of the car.

A chute may be of very simple construction and have no provisions for screenings, weighing, or regulating the loading, unless it be an iron apron, or gates, to hold the coal back while shifting railroad-cars into position for loading.

If only screening is necessary, screen bars may introduced in a chute of wooden frame. If special arrangements for weighing and loading are necessary, a chute of all iron or steel is preferable, although in some cases part iron and part wood chutes are used.

SCREENING.

2655. The usual sizes of coal produced are known as lump, nut, pea, and slack. Although nut coal has been known to be from $\frac{7}{8}$ inch to $2\frac{1}{2}$ inches in size, and pea coal from $\frac{1}{4}$ inch to $\frac{5}{8}$ inch, the following sizes are now the standard:

Lump.—All coal passing over $1\frac{1}{2}$-inch screens.

Nut.—All coal passing through $1\frac{1}{2}$-inch openings and over $\frac{3}{4}$-inch openings.

Pea.—All coal passing through $\frac{3}{4}$-inch openings and over $\frac{5}{8}$-inch openings.

Slack.—All coal passing through $\frac{5}{8}$-inch openings.

2656. Long and flat coal may pass into these sizes that will be larger than the sizes indicated, and some small coal may go with the larger coal when the coal has not been thoroughly screened.

The screening may be done over (1) flat bar screens, (2) over revolving or shaking screens.

The former are generally used, and the coal is screened as it moves by gravity over the bars.

The latter methods require power to operate the screens for the movement of the coal over their surface. If, however, there is not sufficient elevation between the railroad-tracks and the tipple platform, or if the amount of screenings is very large and perfect screening is a matter of importance, their use is necessary.

2657. The standard sections and spacing of flat screen bars are shown in Fig. 977. *A* shows diamond-shaped lump-coal screen bars, and *B* shows another form of lump-coal

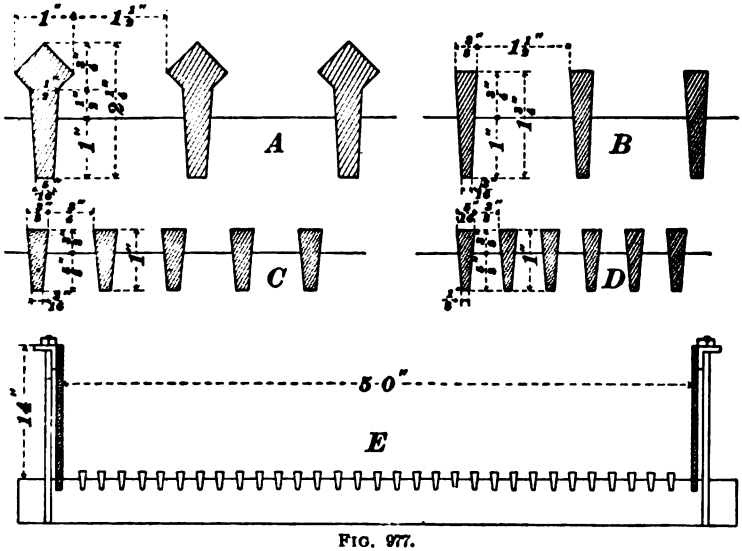

FIG. 977.

screen bars. *C* shows nut-coal screen bars and *D* pea-coal screen bars. *E* shows a cross-section of a lump-coal screen. For lump-coal screens, the screen bearing bars are $\frac{3}{4}$ inch thick by 4 inches deep, and for nut and pea coal the screen bearing bars are $\frac{5}{8}$ inch thick by $3\frac{1}{2}$ inches deep.

These bars are spaced in standard screen frames or chutes 5 feet wide and 12 feet long, with steel sides 8 to 16 inches high. The frames for the smaller screenings are sometimes shorter than this.

Screen bearing bars $\frac{3}{4}'' \times 4''$ and $\frac{5}{8}'' \times 3\frac{1}{2}''$, notched to receive the bars, run across the under side of the frame about 2 feet

apart; their outer ends are held by a stirrup on the lower end of a bolt which pierces the upper flange of the sides of the chute frame, where it is secured by a nut drawing the bearing bars up tight against the frame.

The screen frames have a sheet of steel about ¼ inch thick, 1 foot wide, running across the ends of the frame. Below these are cross timbers to which the plates are bolted, giving rigidity to the frame.

The ends of the screen bars are cut down so that at their upper and lower ends they lap under these end steel plates, flush with their surface, which prevents their rising out of their bearings.

2658. The arrangement of the screens, generally one below the other, is shown in Fig. 974 at *M*. There will be 1 to 3 screen frames, according as 2 to 4 sizes are to be produced.

The lump screen, at the upper end, has steel plate for a length of 4 feet, which receives the blow of the coal as it is dumped, allowing it to spread before it passes over the 12-foot length of screen bars.

The screens *M* are supported by rods *N* to the upper platform, provided with turnbuckles *O* for adjusting the angle of the chute, which may vary slightly with different coals.

To the end of the screen frames are joined steel chute frames of the same width as the screens, but with sheet-steel bottoms to lead the coal to the points where it is to be loaded on railroad-cars, or to loading baskets *P*.

The chutes are provided with fly doors *R*, or gates, by which the sizes can be turned from one loading point to another, and produce either various mixtures or separations of the sizes, according to requirements.

LOADING.

2659. The coal from the screens and chutes may be either run into bins over the railroad-tracks and held there for loading, as needed, or it may be loaded directly into railroad-cars, its flow being regulated or checked by gates, loading baskets, etc.

Generally, where coal is shipped, the storage capacity of the bins is not large, and serves only for holding screenings, in case of short delays during the day's work, as in the supply of railroad-cars, or while shifting them.

If coal is to be stored for many days, an extended arrangement of bins, similar to those in use at coke-ovens, is necessary, with tracks and switches leading thereto from the tipple, or else it is stored by means of a system of elevators and conveyors removing the coal from the tipple.

The point where the coal discharges from the chute into the car should be so arranged that the coal will be loaded evenly in the car on both sides of the center, so as to require a minimum amount of labor in trimming; and the end of the chute should be high enough above the car to clear the height to which the coal may be loaded above the sideboards of the car.

In loading ordinary coal-cars from a chute with end discharge when the apron is down, it should extend about 1 or 2 feet into the car and be about 3 feet above the sideboards, depending upon the height to which the car is loaded.

When the coal has been loaded to the proper height in one part of the railroad-car, the car is shifted and the loading begun at another point. Where only one chute is used, the car must be shifted twice as often as where two chutes and tipples are used. On this account, two chutes are generally used where the arrangements of dumping, screening, etc., are simple. This is also desirable in tipples fully equipped for automatic dumping, screening, and loading devices, if the track arrangement will permit and the cost can be incurred.

2660. In Fig. 974 is shown an arrangement for loading coal-cars by a center discharge basket *P*. This basket is made 12 to 24 feet long, depending upon the length of the chute and the height of the load in the railroad-cars. Its upper end *S* is hinged to the chute, and, when closed, rests at an angle of about 12° to 16°. This and the length of the chute are regulated to check the speed of the coal down the chute, so that it will land near the center of the basket.

The weight of the coal in the basket, which is suspended by a wire rope or chain T to a drum U controlled by a brake V, causes the basket to lower when the brake is released.

The descending load raises a counterweight X, and, as the load descends, the basket is opened by a chain Y adjusted so as to cause the outer arm of the basket to spread apart from the long arm, and open at a less or greater height above the bottom of the railroad-car as the height of the load increases.

Before the momentum of the descending basket and load has spent itself, as the coal discharges from the basket the brake V is applied to the drum above, holding the counterweight X in position to return the basket to its first position, when the brake is released.

The discharge angle of the basket, when open, will vary from 26° to 33°, depending considerably upon the nature of the coal and whether mine-run with much screenings is at times to be loaded on the lump-coal track or not.

2661. There are numerous arrangements of coal tipples, planned to suit the various requirements as to size of screenings to be produced and whether these are to be loaded on cars on one or more tracks, and whether mixtures are to be produced, etc. One other form of tipple, shown in Fig. 978, will suffice with that shown in Fig. 974 to illustrate the different principles. In Fig. 978 is shown a steel-built tipple, with screens, for producing three sizes of coal. This can also be arranged for producing four sizes. The sizes can be loaded separately or mixed, as shown.

A special feature is in the provision for loading box or gondola coal-cars on the outer track with either lump, lump and nut, or run-of-mine coal.

A receiving chute *1*, with two point chutes *2*, *2'*, is suspended beneath the weigh basket *P*. The upper end of the chute is pivoted to the steel structure by rods and turnbuckles. The lower end is provided with a windlass, so that the pitch of the chute can be readily changed to accommodate high or low cars. The chute is provided with a hinged

door 2', so that the trimmer can throw, alternately, loads into a box or gondola car on the first track, and into a gondola on the second track. This gives ample time to throw the coal back in the box car without interfering with the loading on the second track.

2662. Where it is desired to produce several sizes, and the elevation of the tipple above the railroad-tracks may not be sufficient, where tracks run between the bents (14 to 16 feet apart) supporting the tipple platform, it may be accomplished by spanning two or four of the railroad-tracks with trusses supporting the tipple platform, which will permit of making the center lines of the railroad-tracks 12 to 13 feet apart, thus bringing the railroad-cars within the reach of the discharge points of two or more screen chutes with a slight elevation of the tipple.

In Fig. 978 the dump is shown at *A*, the screens at *M*, the brake bearings at *B*, the loading basket at *P*, the rope or chain by which it is raised or lowered is shown at *T*, the drum over which the rope or chain passes is shown at *U*, and the counterweight at *X*. The deflecting chutes are shown at *R*. The loaded cars from the mine and the empty cars to the mine are handled in a manner similar to that shown in Fig. 974.

BOX-CAR LOADER.

2663. A **box-car loader** is the name of a device, operated by power, for throwing the coal towards each end of the railroad-car, after it has been chuted into the car door. The loader consists of a pointed ram, oscillating horizontally, which can be moved in and out of the car door. It is located on the opposite side of the lump or mine-run track from the tipple.

When coal is to be loaded, the nose of the ram is moved into the car, and as the load of coal is chuted down against it a double plow-like surface on the nose of the ram oscillates rapidly and throws it to the end of the car. When loaded, the ram is withdrawn. Coal is considerably broken where this machine is used.

WEIGHING.

2664. In some cases the weight of coal loaded in mine-cars is estimated by volume; that is, cars are constructed of such a number of cubic feet capacity as will hold 1½ or 2 tons. This capacity will vary with coals of different specific gravities, and must be determined in each case, especially at isolated mines. This method applies very well for friable coal that will leave no large vacant spaces in the car, and where the coal is loaded level or a few inches above the sideboards. If the coal consists mostly of large sizes, or if the cars are loaded much above the sideboards, the coal should be weighed.

Where the price paid for mining per ton is for mine-run, coal may be weighed in the mine-cars at the tipple platform by passing the loaded cars onto one or two scales, as the arrangement of one or two loaded tracks require.

The scales should be located at a point where the cars can conveniently come to a standstill, and then be readily moved to the tipple. Different locations are shown in the various plans of the surface arrangements, depending somewhat upon the system of tracks.

The scales should be located handy to the tipple, so that the result of the inspection of the coal may be known immediately after its weighing and the miner's check collected.

Where there is no screening, and the mine-run only is loaded on railroad-cars, the weighing can be conveniently done by track-scales, under the railroad-cars, as they stand opposite the chute to be loaded. A possible error in estimating the weight of an empty mine-car is thus avoided. In this case the checks removed from the mine-cars above must be delivered by some device to the weighman below; and if coal from above is run to the boilers or other points, some provision must be made to weigh it, in case weighing is necessary. The arrangement for weighing on railroad-cars can also be applied where only the weighing of lump coal is required, or a combination of the above and of weighing on scales at the tipple platform can be used, where the

weight of lump coal and screenings less than 1½ inches are each necessary.

It is preferable in this arrangement that the scales below be connected, by a system of levers, to a weigh-beam on the tipple platform, handy to the tipple, so that the weigh-man can more carefully watch the several operations, and, therefore, be less liable to error in recording the weights of the different products contained in each mine-car.

Usually, only the lump coal passing over the screens with 1½-inch openings is weighed. In this case, a convenient arrangement is shown at *Z*, Fig. 974, and at *B*, Fig. 978, wherein the loading or discharge baskets are suspended to scale bearings, either on or just under the tipple platform, and by a system of levers the weight is transmitted to the weigh-beam *Q* near the tipple horns.

It is sometimes necessary to weigh a certain size of screening that has been separated from the mine-run after dumping, which is to be used for coal washing or coking, and is removed from the bin under the tipple to the latter plants by elevators or conveyors. In this case, the screenings are caught in a hopper resting on scales and connected with the weigh-beam in the platform above.

CLEANING COAL.

2665. If the amount of cleaning that the coal requires is moderate and confined to picking the slate from the lump coal, it will suffice to allow room to lay a narrow track alongside of the lump track, so that mine-cars or smaller ones can be placed alongside of the railroad-car being loaded with lump coal. The slate picked from the coal can be dropped into these small cars, which can be run over a track to some dumping point. If there is considerable slate, rock, and impurities in the lump coal, it will be necessary to plan the tipple especially for the purpose of picking or breaking the lumps to remove it. Fig. 979 shows in elevation and plan an arrangement for this work.

It is desirable that there be as many tipple dumps as

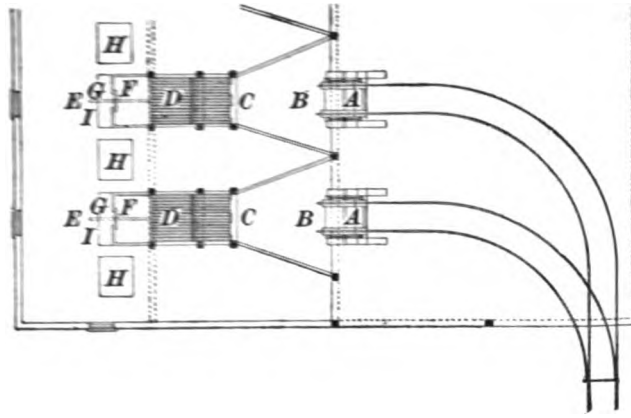

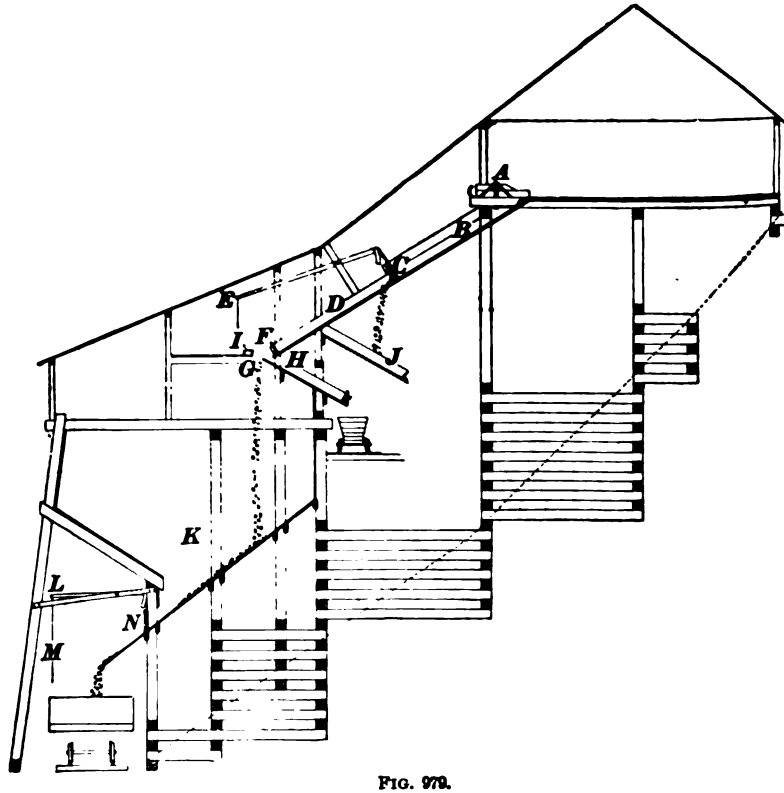

FIG. 979.

possible, so as to deposit the coal at many points, to permit of room and time for a sufficient number of hands to pick over the coal.

The slate pickers are seated along a platform *I*. They regulate the flow of coal down the chute towards them by a lever *E* operating a gate *C*. A small quantity is allowed to flow onto the picking platform, which, after being picked, is shoveled through the coal-hole *G* into the bin *K*, and the slate is thrown into a slate chute *H*. The fine coal from the screen is conveyed away through chute *J*, and the slate is loaded into a slate car for removal through chute *H*. The coal in the bins *K* is loaded into railroad-cars by opening the gate *N*, which is operated by the rope *M* attached to the lever *L*.

Where the nature of the location and existing arrangements will not permit of the width of tipple platform required in this case, and only one or two tipples are used, an endless belt or conveyor, with a sheet-steel surface made in sections, can be introduced at the foot of the chute, and caused to move either in the direction of the tipple or at the right of it, on which the coal from the tipple is received and carried along in front of slate pickers on either side of it. The belt moves slowly, and its length and speed will depend upon the time required to clean the coal. The belt may discharge the picked lump coal directly into a railroad-car or into a bin.

If the nut coal is to be picked, to free it from slate, etc., it should first be passed over a revolving or shaking screen, to obtain a uniform size free from smaller coal. It can then be run in one or more spouts, passing in front of as many slate pickers as may be necessary to clean it. If the nut coal, after screening, is delivered at too low an elevation, it is raised by elevators, located between the railroad-tracks, to a proper height for spouting, picking, and loading into bins or railroad-cars.

If the impurities in nut coal or smaller sizes are considerable, the cleaning can be done thoroughly only by coal washing, which requires that there be not too great a

difference in the sizes of the coal. To obtain close sizes, either revolving or shaking screens should be used, with circular perforations.

HANDLING OF ROCK AND WASTE.

2666. In mines with seams of fair height, say 4 feet upwards, and of clean coal, the amount of rock and waste produced underground that must be hoisted and dumped will not be great. In small seams, or seams with thick slate partings, generally the rock and waste can be disposed of in the gob by some system of mining, as longwall, or in pack-walls in the width of room workings. But even in these cases it may be frequently necessary to hoist rock at times in considerable quantities, should heavy falls occur, or in case of heaving of fireclay bottoms, crushes, and creeps. Provisions for handling rock in these events will greatly reduce interferences with the work.

Storage of rock underground, in some places, is a source of danger from fire, and in such cases it should be hoisted.

A rock dump may be provided outside, where the waste will not be an obstruction, and where a good height for a dump can be secured. This may be somewhere between the mine outlet and the tipple, provided the return of the empty cars to their proper track can be conveniently arranged. If not, a dump beyond the tipple and railroad-track will be preferable, the cars of rock being carried thereto on a trestle over the railroad-tracks. If no available space exists for a rock dump, arrangements may be made for carrying away the rock on railroad-cars, in which case a rock dump can be provided in the tipple, the rock being dumped into a bin, from which it can be loaded into a railroad-car and carried away as desired.

A variety of arrangements for switching out cars of rock as they arrive from the mine is shown for different conditions and requirements in the plans of the surface arrangements of mines. At drift and gravity-plane mines, the rock can be generally switched out immediately after coming out of the mine and before passing to the tipple, as there is

plenty of height for a rock dump on the hillside in front of the plant location.

Cars of rock can be dumped on ordinary tipple horns, which are extended on a trestle as the dumping ground fills up, immediately below the tipple. Rock cars are sometimes run under a derrick provided with a windlass and chain, or rope, with a hook at the end of it, which is put into the eye of the draw-bar at the rear of the car. The rear of the car is then raised by the chain and windlass high enough to let the rock run out. This arrangement does not require tipple horns, the track and the derrick being extended as the dump fills up.

Another arrangement is to erect a set of tipple horns on a truck running on a track about 2 feet lower than the rock track. The car of rock is run onto the tipple horns of the truck, and then with its load hauled to the rock dump, where the car of rock is dumped by the tipple horns tilting on the truck. The truck with the empty car is returned to the starting point and the empty rock car removed.

In some locations the amount of rock or the lack of dumping ground necessitates hoisting the cars of rock up an inclined plane and dumping at considerable height above the level of the surrounding ground, and at some distance from the operations. These cars can be arranged to dump at the side by gates opening in these directions, and the car divided by chutes sloping from the center towards the sides. The rock can be loaded into these cars under bins in the tipple structure, into which the rock has been dumped from cars from the mine or by self-dumping cages.

ARRANGEMENTS FOR HANDLING COAL EASILY BROKEN IN DUMPING.

2667. Fig. 973 shows a cradle for dumping coal that breaks easily from the force with which it strikes the chute. The weight of the load in the cradle causes it to tip, and in so doing it raises a counterweight. When the cradle and car have turned sufficiently to dump, a brake is applied, holding them in this position. The door on the top of the

cradle which holds the coal in the car is opened automatically and releases the coal, which flows out gently into the chute. The door then closes, and, the brake being released, the counterweight causes the cradle to return to its first position, and the car is then removed.

2668. An arrangement is shown in Fig. 980 for lowering coal that breaks up badly from grinding in the chute and from the force with which it strikes the car. This consists of an inclined car *A*, without a bottom, in the chute, its sides resting on the chute and screen bars. The coal

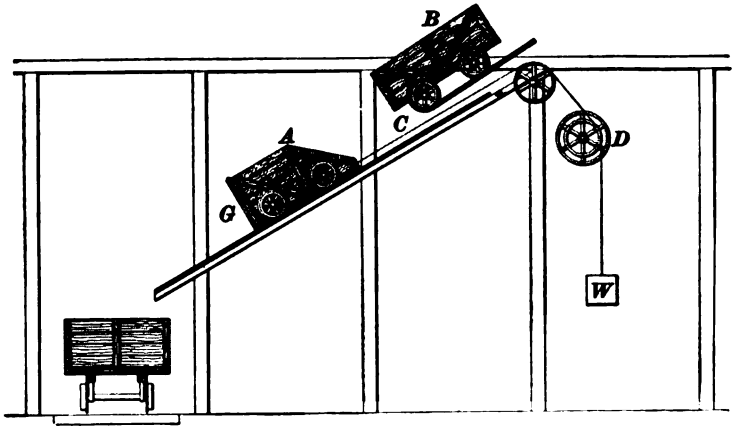

FIG. 980.

from the mine-car *B* is dumped into this, and the weight of the coal in the inclined car causes it to move down the plane, screening the load as it descends. A wire rope *C* is attached to the car at one end, and to a brake drum *D* at the other, the descending car raising a counterweight *W* on the opposite side of the drum. When it reaches the bottom of the chute a brake is applied to the drum, holding the car at the bottom of the chute, while its end gate *G* opens automatically and the load drops into the railroad-cars. The brake is then released, and the counterweight causes the empty car *A* to return to the head of the chute to receive another load.

2669. If there is much fine coal, so that the screening is imperfect in securing large lumps over the ordinary screen bar, an arrangement as shown in Fig. 981 may be introduced. The coal is dumped from a mine-car *A*, either on an ordinary tipple or in a cradle, onto a shaking screen

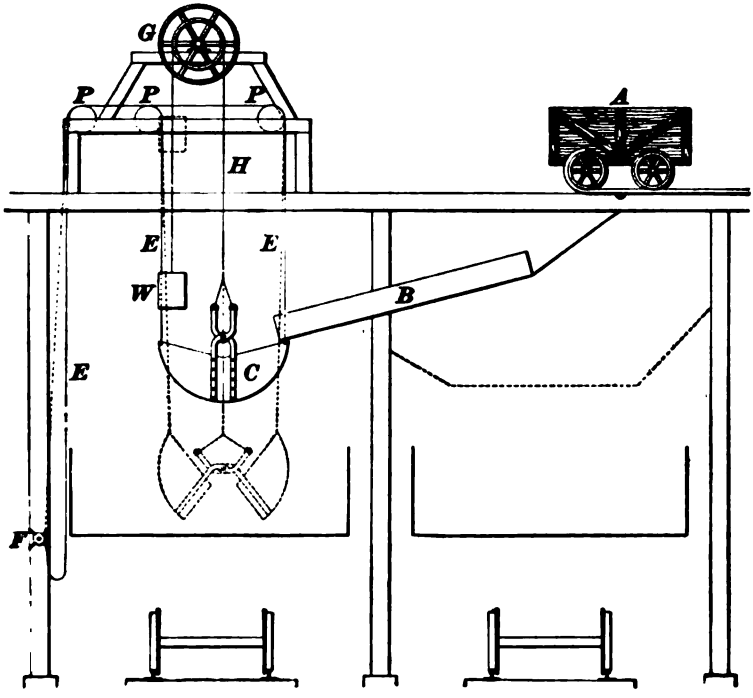

FIG. 981.

B with circular perforations. The coal moves gently over this and is thoroughly screened, and drops into a loading basket *C*, operated similar to that in Fig. 974.

This basket can be arranged to have any amount of play, vertically, between the end of the screen and the railroad-cars into which it is to deposit the coal. The basket *C* is suspended by the rope *H* passing over the brake drum *G* and connected with the counterweight *W*. As the weight of the coal lowers the basket *C*, it is opened by the rope *E E* passing over pulleys *P*, *P*, *P* to the windlass *F*. This rope *E*

can readily be adjusted for opening the basket at any height, so that the coal will not be broken by striking the car. As the load in the car increases in height, the basket can be adjusted to open higher up.

If the height of the mine landing above the railroad-tracks is too great to immediately introduce tipples between the two points, similar to those described, or if a gravity plane can not be used, then an arrangement for vertically lowering the coal may be used, as shown in Fig. 970.

From the lower landing any of the tipple arrangements already described may be used to suit the conditions and requirements.

2670. Arrangement of Tipples for Increasing Dumping Capacity.—Fig. 982 shows an arrangement of

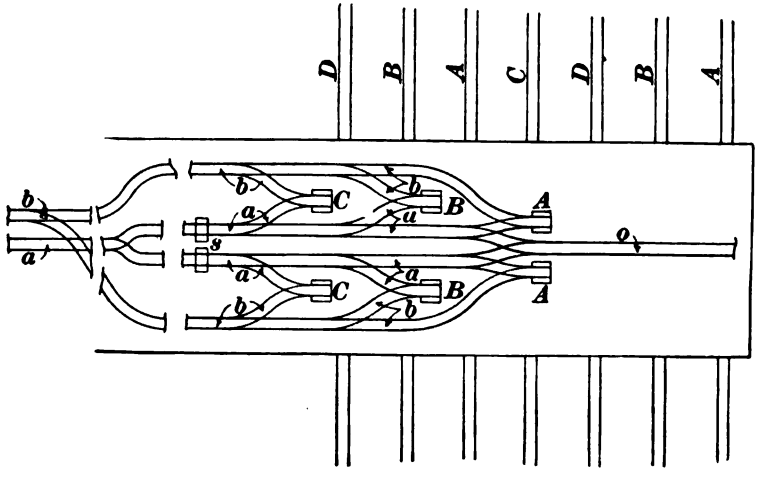

FIG. 982.

tipple with several dumping points for increasing the capacity of the mine and for shipping several sizes of coal, or all mine-run, as desired. On this figure the loaded tracks from the mine to dumps are marked *a* and the empty tracks *b*. The dumps *A*, *A* and *C*, *C* are for coal to be screened, and the dumps *B*, *B* for coal to be shipped as run-of-mine. The scales are shown at *s*. The railroad-tracks are arranged as

follows: *A*, *A*, lump-coal tracks; *B*, *B*, nut-coal tracks; *C*, run-of-mine track, and *D*, *D*, slack tracks.

2671. Construction of Tipple.—Where the trestle is built of timber, posts 10 inches to 14 inches square are used, or the composite posts of 2 pieces 6 × 12 or 7 × 14 form bents for support of the trestle, as shown in Fig. 974. To prevent accidents in case of fire, it is desirable that the tipple be built of steel or iron, especially if near the mine opening, and in any case if it is possible. The roof should always be of corrugated iron.

ARRANGEMENT OF MISCELLANEOUS DETAILS.

RAILROAD-TRACKS.

2672. There should be, in addition to the branch from the main line of the railroad, a track for each size of coal produced, and also a track for receiving material, etc., if the conditions require it.

Railroad-tracks are generally spaced 14 to 16 feet from center to center. They may be less than this; but, to permit of tracks being laid between the bents of the tipple-platform trestle, they should be about this distance, especially if some clearance around the cars is needed for men, or if tracks are on a curve under the trestle.

The curves of standard-gauge railroad-track sidings should not exceed 12° (478 ft. radius), and it is preferable if they do not exceed 7° 30′ curves (764.5 ft. radius). This latter is the usual radius for turnout curves at switches, and requires about a No. 8 or No. 9 frog in the turnouts from straight tracks.

In the case of turnouts with this curve connecting two parallel tracks, 14 feet between centers, the distance from the point of tangency, or beginning of curve to the reversing point between the two tracks, will be about 103 feet, and the distance between the points of tangency of the two tracks will be twice this, or 206 feet.

2673. The length of railroad sidings required at a mine will depend on the output, number of sizes of coal to be produced, and storage room required.

If only sufficient empty railroad-cars are needed to be stored for one day's output, the length of the siding will be found from the following expression:

$$\frac{\text{Daily output of mine}}{\text{Capacity of railroad-car}} \times \text{length of railroad-car.}$$

The storage track for empties may be either single or double track, as the location will permit.

The length of this siding will begin above all the switches leading to the various tracks under the tipple, so that empty cars can be dropped down to any point required for loading, and incoming empties can be placed above the chute without shifting the loads.

The length of the tracks below the chute for each size of coal will depend upon the proportion of each size produced, and the length should be measured in the straight track, not including the switches at the tipple or the switches leading from the tracks into the main empty siding.

If run-of-mine coal is loaded always, or at times, there should be sufficient storage on this track for the whole output, either on a single or a double track. The arrangement of these tracks is shown in the different plans of the surface arrangements of mines.

A repair track, on which to switch crippled empties, is sometimes necessary, and if there is not a material track that can be used for this purpose, a repair track should be provided.

The grades of the empty tracks above the chute should be at least $\frac{3}{4}$ foot per 100 feet, although 1 foot per 100 feet is better, especially over switches, or if there is much curvature. A grade of one foot per 100 feet, for 200 feet, should be provided at the tipple, to start the cars promptly when loaded. For the balance of the distance the loaded tracks should have at least $\frac{1}{2}$ foot per 100, or $\frac{3}{4}$ foot per 100 feet is better, especially if there is much curvature. A 1% grade

is sometimes too steep, it being difficult to control loaded cars if they get much headway and brakes work with difficulty.

MINE-CAR TRACKS.

2674. The gauge and distance apart of mine tracks depend upon the size of the cars and other requirements, which vary considerably with the conditions of mining in different places.

For cars with small wheels 12 or 14 inches in diameter, and 18 to 20 inches from center to center of axles, and 3-foot gauge, curves of 12 feet radius can be used; but at least 20 or 25 feet radius should be used, and these should be the sharpest curves for larger cars with wheels 16 to 18 inches in diameter.

2675. It has been indicated what the grades should be for mine-car tracks at shaft and slope landings for short distances, where it is desired to introduce such. For long tracks, where the cars may run by gravity from the mine outlet to the tipple, generally a grade of 16 inches for the first 100 feet, 12 inches for the next 100 feet, and 9 inches per 100 feet for the balance of the distance will be sufficient with track in ordinary condition and where cars with 12 or 14 inch wheels are used.

These grades may be 2 or 3 inches lighter per 100 feet where cars with wheels 16 or 18 inches in diameter are used, and where the track is in good condition and straight, or has very light curves.

The empty cars, returning by gravity, should have a grade of about 1 foot in 100, which should be reduced for the last 100 feet or 200 feet if it is desired to bring them to a standstill before entering the mine. It is important that a steep grade be given at the start, in this case say ½ foot in 20 feet, where the cars start from a standstill.

2676. Where gravity tracks are used, some arrangement, as shown in Fig. 974, is necessary to raise the empties

high enough to return them to the mine, unless they are removed by motor or rope haulage.

It is preferable to introduce this car lift at the tipple, as the tracks near the yard and shops can then be maintained at nearly a level. It is, however, sometimes introduced at the latter point, in which case the tracks at the tipple are nearly level.

Where mule, motor, or rope haulage is used for handling the trips outside for some distance, and it is not desired to maintain a difference in the elevation of parallel loaded and empty tracks, a down grade of about 1 foot per 100 feet will facilitate the movement of the loads towards the tipple, and the empties can be readily returned up the same grade.

The length of mine-car sidings will depend upon the various conditions, as the length of cars, number of cars in a trip, and the frequency of arrival of trips outside, depending upon a long or short haul.

At a shaft mine with landing on a trestle the tracks are planned only with sufficient length for handling single cars, and permit of introducing the necessary turnouts, switches for rock, etc., and return empty tracks. With these arrangements, there is frequently sufficient room for holding several loaded and empty cars, as a reserve in case of slight delays.

If, however, there be some dependent operation, as coke making, for which the coal is dumped into bins to supply the ovens, and they are full, it may be desired to hold the coal. For this, storage tracks for loads and empties sufficient to bridge over usual delays are best arranged underground. On the yard level outside there should be sufficient side-tracks to hold all the mine-cars, in case it is necessary at any time to remove them from the mine.

At a shaft mine with landing on natural ground and some distance between the shaft and tipple, any storage room needed, as above, for loads and empties can be arranged outside. At a slope mine, if provision is necessary for the accumulation of any loads or empties, it must be arranged underground.

The landing room for trips hoisted from the mine should be a little longer than the number of cars in the trip require, and the empty return tracks should have length enough to have one complete empty trip in readiness for return to the mine, and a second one nearly made up.

At a drift mine with a short haul, or frequent arrivals and departures of short trips, the sidings can be short. This is the case where the arrangement of the haulage tracks inside permits of moving several trips in either direction at the same time, as with mules, endless-rope, or locomotive haulage. Long sidings, however, are necessary where long trips are moved, on account of long haul, and either the above systems or tail-rope haulage is used.

2677. The method of determining the length of siding required can best be ascertained by taking the following examples:

Suppose the cars to be of 1 ton capacity, the trips to arrive every 20 minutes, and the mine to work 8 hours per day, then $\frac{8\text{ (hr.)} \times 60\text{ (min.)}}{20\text{ (min.)}} = 24$, the number of trips per day.

If the output is 1,500 tons a day, then $\frac{1{,}500\text{ (tons)}}{24\text{ (trips)}} = 62 =$ the number of tons hauled per trip.

If the cars are of 1 ton capacity, then there must be 62 cars on the trip.

If the cars are 7 feet long, then the length of the siding for the arrival of the trip should be $62 \times 7 = 434$ feet long.

In the calculation of the length of mine-car tracks the uncertain factor of delays and accidents makes it desirable to allow double the calculated length or more, if the expense can be incurred and the location will permit, so that double the above length, or (434×2) 868 feet, of siding should be allowed for both the loaded and empty track.

2678. To find the number of cars required for mining operations, the following example may be taken as an illustration:

Estimating the length of haul underground as 1 mile, at

a speed of 6 miles per hour it will require 10 minutes to make a trip in one direction; the total time for a round trip will be as follows:

Hauling empty 1 mile	10 min.
Distributing, loading, and gathering cars	1 hr. 00 min.
Hauling loads 1 mile	10 min.
Dumping and returning to mine	20 min.
Contingencies	20 min.
Total	2 hr. 00 min.

Therefore, if it requires 2 hours for a car to make a round trip, a car will make only 4 trips a day

If the capacity of the car is 1 ton, then 1 car will handle 4 tons a day, and it will require (1,500 tons daily output ÷ 4 tons) 375 cars to handle the output.

2679. In laying out a turnout, or in connecting one straight track with another, the following rule will determine the distance between the switch and the frog: The distance from the switch, or point of curve, to the frog may be found by multiplying twice the radius of the curve by the gauge of the track and extracting the square root of the product. Or, by referring to Fig. 983 for the meaning of the letters, it will be seen that the rule can be briefly expressed in the formula

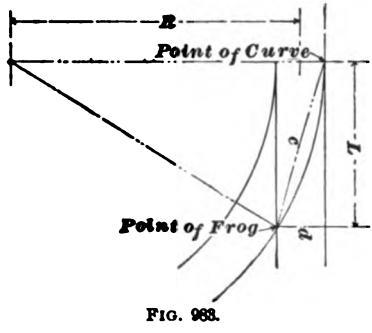

FIG. 983.

$$L = \sqrt{2\,R\,d}. \qquad (214.)$$

COAL-WASHING PLANT.

2680. If a washing plant is necessary for cleaning coal for shipment or for coke-ovens, it may be located near the tipple, and the sizes produced in screening delivered there by elevators and conveyors removing the coal from under the screens of the coal tipple.

If the coal washer is located at some distance from the tipple, it should be along the railroad-track. The coal is best conveyed there as one size, generally as coal less than 1½ inches in size, either by conveyors or railroad-cars, which deposit it in a pit, from which it is lifted by an elevator, and then separated at the washer plant into the sizes best suited for washing. The coal-washing plant should be handy also to the head of the lines of coke-ovens if the cleaned product is to be used for coking.

COKE-OVENS.

2681. Beehive coke-ovens are generally 12 feet in diameter and 6½ or 7 feet high. They may be built either in single rows or in blocks. The latter are shown in Fig. 984.

They should be located so that the charging larry *B*, after being loaded at the coal-bins *A*, can be run down the track on top of the ovens, which has a grade of at least 1 in 100. This track should be supported on piers and to one side of the tunnel head of the ovens *C*, so that the larry will not be exposed to the heat of the ovens. By referring to Fig. 984, the coke wharf *D*, with a height of 8 feet, will be seen, with coke cars *E* in position for loading. The larries are moved over the tracks by an endless rope *G* operated by an engine located under the tracks at *F*.

It is preferable that the coke-ovens *C* be situated on the same side of the railroad-track that the mine is, but some distance away. If they are built beyond the railroad-tracks, a trestle can be built from the landing platform of the mine, over the railroad-tracks, to the coal-bins of the coke-ovens.

If the location for the coke-ovens does not permit of a down grade for the loaded larry, or if an opposite grade is necessary, rope haulage can be introduced, as shown in Fig. 984. Loaded larries may be hauled up a grade of 3% or more with an arrangement of endless-rope haulage, as here shown.

A plant of 100 ovens, 12 feet diameter, in a single row,

requires a width of 48 feet and a length of about 1,600 feet, with bins, etc.

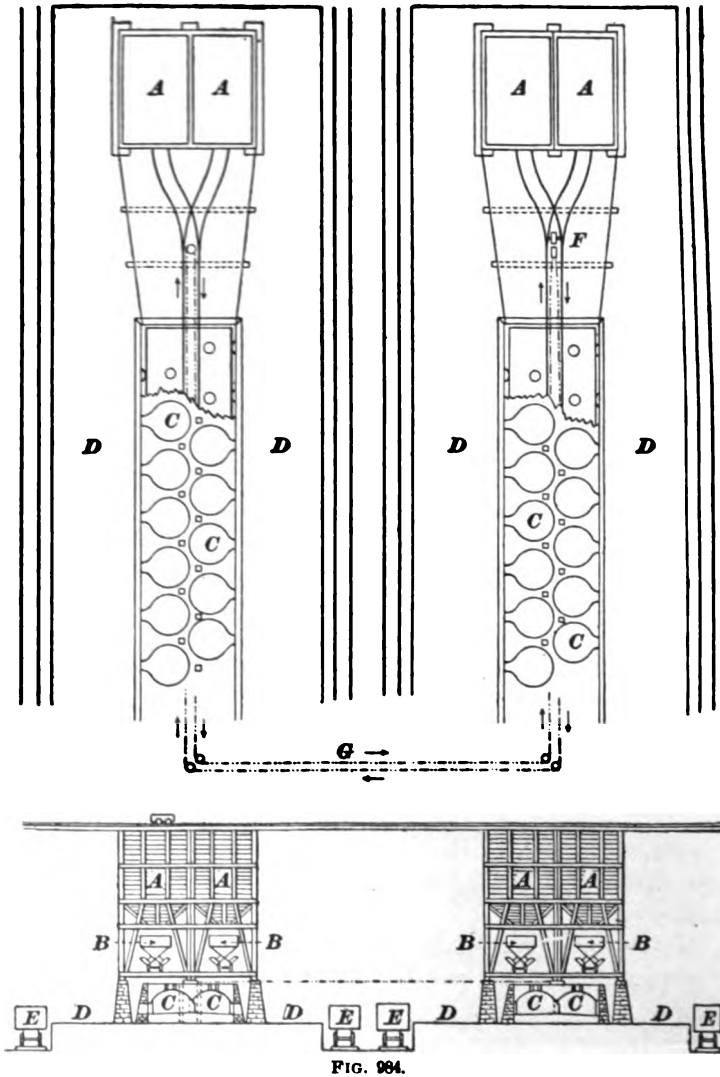

FIG. 984.

A plant of 100 block ovens requires a width of 98 feet from the center of the railroad-track and a length of about 900 feet, with bins, etc.

The charge for a coke-oven is about 5 tons. One hundred ovens running on 48-hour coke will require 250 tons daily. The capacity of the bins should be about equal to this.

Estimating 42 cubic feet of coal to a ton, the contents of the bins must be 10,500 cubic feet.

A height of 50 to 60 feet is needed from the railroad-track to the top of the coal-bins at the coke-oven plant. The tipple landing should be arranged on a level with the top of the bins, if possible, where mine-run is coked.

If, however, screenings are coked, the above arrangement is not of such importance, as the screenings will generally have to be raised by elevators to the bins.

If the tipple platform can not be arranged on a level with the top of the coke-oven bins, or if the elevation of the ground for the site of the coke-oven plant is not sufficiently low to make the top of the bins on a level with the tipple platform and lead the railroad-tracks to the ovens, then it will be necessary to arrange a short incline for hoisting the mine-cars from the tipple platform to the top of coke-oven bins.

WATER-SUPPLY.

2682. The water-supply may be obtained as follows:

1. From the mine water, if in sufficient quantity to be pumped from the mine to a reservoir, provided the presence of sulphur, alkali, and impurities does not exclude its use. If the water is dirty or contains suspended matter, it will require settling before use.

2. From springs or streams at higher elevation than the mining operations, the water from which may be held in a reservoir at sufficient height above operations to afford sufficient head for pressure at the works.

3. From sources lower than mining operations or from deep wells, requiring pumping stations to force the water through a water-main to a reservoir at sufficient height above the operations for pressure.

In the erection of a pumping station, the site should be considered with reference to its location near tracks for the

supply of fuel, or, if at a distance, with reference to the means of getting coal to the plant.

If mine water can be used in any of the operations, as for boilers, coal washing, or coking, it should be held in a separate reservoir from the fresh-water supply. Water with some sulphur may be unfit for boilers, but suitable for coal washing or coking, although sometimes there may be too much sulphur in the water to permit of its being used for any purpose.

2683. Whatever may be the sources of the supply, the water will be stored or collected in reservoirs, made as follows:

1. Made by an earth dam or breastwork thrown across a ravine. The inside may have to be puddled with clay or cemented, to make it hold water.
2. In tanks of wood, iron, or stone.

Generally, no more than two reservoirs will be needed, and one will be sufficient if only a fresh-water supply is stored.

2684. Style and Location of Reservoir.—Where a reservoir can be readily constructed by an earth dam at sufficient elevation, and the cost of pumping or collecting water therein is not very expensive, such will serve as well as a wood, iron, or stone tank. If, however, the cost of pumping is expensive, owing to the distance of a pumping plant from the reservoir, scarcity of water, and its evaporation or absorption in an earth reservoir is considerable, then a wood, iron, or stone tank should be used. Wooden tanks are erected for temporary and iron or stone tanks for permanent service.

Where there is no ground in the vicinity of the operations at a higher elevation than the plant, either a wooden or iron tank should be erected on a trestle sufficiently high to give the desired pressure at the works. The pressure need not be sufficient to feed the boilers, as a feed-pump will generally be used for this work.

Where there is ground at sufficient height for the location

of a reservoir, either a wood or iron tank can be used, and need not be located on a trestle. Or, if stone is plentiful and the nature of the soil will permit, a stone reservoir can be constructed, affording permanent service.

If there is much sulphur in the water, it precludes the use of an iron tank, unless coated inside with paint or some substance to resist the action of the sulphur.

2685. Construction of Earth Dam and Reservoir.—In the excavation for a basin or the building of a dam, it is preferable that the soil be clay and well tamped as its building progresses.

If the soil is sandy or gravelly, the building of a dam may be impracticable without borrowing suitable material elsewhere at too great an expense.

If the soil can be used, it may be necessary after completion to give the surface of the reservoir a heavy layer of concrete, with a coating of cement.

The inner slope should be 2 to 1 and the outer slope $1\frac{1}{2}$ to 1. The top of the embankment should be 8 to 10 feet wide, although this varies with the height of the reservoir, and may be found from the following expression:

$$T = 2 + 2\sqrt{H}, \qquad (215.)$$

where T = top width;
H = height of water.

In small reservoirs the water should be about $2\frac{1}{2}$ or 3 feet lower than the top.

2686. Wood and Iron Tanks.—These are procured ready made, ready for erection. The foundations of wood tanks generally consist of 4 parallel bents, braced together, and with stringers laid across the bents, on which are placed $2'' \times 12''$ floor joists supporting the bottom of the tank.

The foundations of iron tanks are generally of stone, built with 4 parallel piers, across which are laid steel rails to support the bottom of the tank.

2687. Construction of Stone Reservoirs.—For heights of 8 to 10 feet, the inside of the wall may be straight

and the outside battered 3 or 5 inches to the foot, depending upon the weight of the stone used. The top width will be about 18 inches. The bottom of the reservoir should be built with stones laid closely together and well filled with mortar or concrete. The side walls are then built up on the bottom foundation, and, when complete, the whole interior is coated with ½ to 1 inch of cement.

2688. Amount of Water Needed.—This will depend upon the quantity of water needed in each of the different operations. In determining the amount of water-supply for a coal plant, the following needs must be considered:

1. Supply to boilers; 30 to 35 lb. of water per H. P. per hour should be allowed.
2. Household use.
3. Shops and stables outside.
4. Underground stables and drinking.
5. For air-compressor; cooling air.
6. For coke-ovens; allow 300 gallons per oven watered daily.
7. For coal washing. The requirements per minute will depend upon the size of the plant. A fair-sized plant uses 400 to 600 gallons per minute, but, as most of this is water that is used over and over, provision need be made only for supplying 50 to 100 gallons for replenishing loss per minute.
8. For fire purposes outside and underground.

Mine water may possibly be used for these three latter purposes.

2689. Arrangement of Pipes.—The reservoir is filled with water by a feed-pipe from the source of supply flowing into the reservoir over its top. An outlet or supply pipe supplies the works and other points of consumption, and draws water from the bottom of the tank.

This pipe is laid from 3 to 6 inches above the bottom of the reservoir.

A pipe is also laid level with the bottom of the reservoir,

with a valve on the outside for cleaning the reservoir when filled with dirt up to the supply pipe.

Sometimes the feed-pipe filling the reservoir is also made a supply pipe to the works, tapping the reservoir at the bottom. In this case, if the water is pumped to the reservoir from a pumping station, a valve outside the reservoir can be turned off, checking the inflow of water to the reservoir and permitting the full pressure of the pump to act on the supply pipes.

If there are separate feed and supply pipes, a connection with a system of valves can be made outside, so that, by turning off a valve on each of the feed and supply pipes and opening a valve in a short pipe connecting the other pipes, a direct pressure from a pumping station supplying the reservoir can be obtained in case of fire.

If the above arrangement can not be made, the supply pipe to the important points to be guarded against fire should be laid, so that connection can be made with a pump in the boiler room to give the necessary pressure.

2690. Size of Pipes for Main Reservoir.—The size of the feed and supply pipes will depend upon the extent and nature of the operations. An ordinary-sized water-main is 3 or 4 in. in diameter for a mine and the requirements connected therewith, using six boilers, 70 to 100 H. P. each, requiring a reservoir capacity of about 30,000 gallons, or possibly 50,000 gallons capacity in case of accident to the pumps.

If the operations include 100 coke-ovens, a 4-inch water-main should be laid, allowing about 15,000 gallons additional tank capacity.

Where extensive coking operations and coal washing are carried on, a 6-inch water-main and a 150,000-gallon reservoir will not be too large. Pipes should be laid below the frost line and well covered with soil. Around the mine buildings, coal and rock dumps, and coke works, they should be well surrounded with clay, so that sulphur in the coal or water can not destroy them.

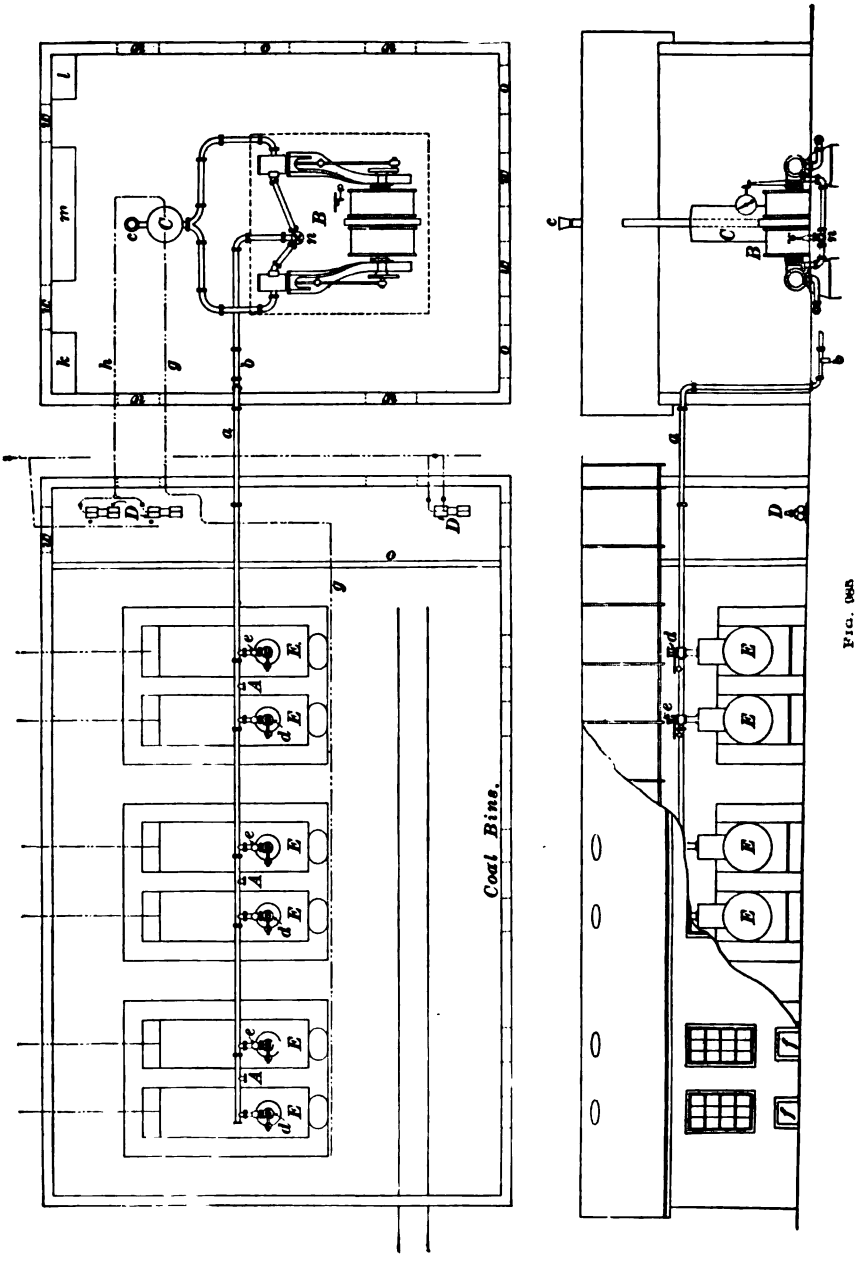

FIG. 985

ARRANGEMENT OF BUILDINGS, SHOPS, ETC.

2691. Engine Room.—A building about 34 × 46 feet inside will be large enough for an engine. This will allow plenty of room between its walls and the engine to conveniently work about the latter. It should be well lighted, and the windows arranged so that the engineer can command as full a view of the landings, etc., as possible.

Fig. 985 shows an arrangement of an engine room with feed-water heater *C*. The steam to the engine *B* is admitted by a throttle-valve *n* below the floor. This prevents heating up of the engine room and delivers drier steam to the engine than where the throttle is over the head of the engineer.

If much water is carried over with the steam from the boilers *E*, a steam separator should be introduced in the steam main just before reaching the engine.

Generally, if the main *a* is large enough, any condensed water can be caught in a drip-pipe *b* and blown off occasionally.

If the location will permit, it is a good plan to locate the boilers low enough so that the steam main will drain back to the boilers from the throttle of the engine.

2692. Boiler House.—A convenient arrangement for a boiler plant is also shown in Fig. 985. The depth of the house is 46 feet. Its length will depend upon the number of boilers.

For six boilers its length should be about 64 feet, with 10 feet at one end for a feed-pump room.

Sufficient space should be allowed in front of the boilers for stoking, removing ashes, handling of rakes, flue cleaners, and removing flues, etc., and at the rear of the boilers for cleaning, repairs, etc.

Boilers may be built solidly together in a battery, although it is best to separate them in nests of two, as they can be better cooled off for examination and repairs.

The stacks for boilers are generally No. 12 or 14 sheet iron, 28 to 32 inches in diameter, one for each boiler.

Sometimes a brick stack is erected, with flues leading to it from the boilers. In this case space should be provided for the foundation of the chimney, which for six or eight 80-horsepower boilers will be about 13 feet square at the base and 11 feet square at the top, with a flue 5 feet square lined with firebrick.

Two feed-pumps *D* should be provided, and possibly a fire-pump *D'*. The feed-pumps should be arranged to act together on the same supply and feed pipes to the boilers, or independently, if either is disconnected. At each boiler there should be a short branch from the feed-pipe, provided with a globe and check valve.

The arrangement of a safety-valve *d* and gate-valve *e* for each boiler, and their connection with the steam main *a*, is shown in Fig. 985. The latter also has branches for connection with other machines to be run by steam at *A*.

The location of the boiler house should be central to the principal points to which it is to supply steam. Generally, a location is best by the side of the hoisting-engine, or it may be at the rear, if this location is not too far removed from other engines.

One side of the boiler house should be free, for the removal of boilers for repairs. It is preferable not to sink the boiler house lower than the level of the surrounding ground, but to keep it somewhat elevated or where there is a fall in the ground, for the disposal of ashes.

Boilers should be located so that it will be convenient to obtain their coal supply from the mine-cars; or they may be located near the railroad, preferably the slack track, and draw their supply of coal from there.

Coal-bins should be located in front of the boilers, with coal-holes on a level with the floor of the boiler house.

If the location of the boilers does not permit of running the ashes out on a tip car to an ash dump, it will be necessary to arrange a pulley hoist for raising ashes in a bucket to the tipple platform, where they are dumped into cars to be run to the rock dump.

Ashes may sometimes be needed for ballasting roads in

the mine, in which case the ash track is connected with some track leading into the mine. By referring to the figure, it will be seen that the feed-water heater receives the exhaust-steam before it is discharged from the exhaust-pipe *c*. The coal-holes in the boiler house are shown at *f*. The water-main is shown at *i*, the cold-water pipes to the feed-water heater at *h*, and the feed-water pipes from the heater to boilers at *g*. A closet for oils, etc., is shown in the engine-house at *k*, and one for clothes is shown at *l*. A work-bench, with drawers, etc., is shown in the engine-house at *m*. Windows are shown in the plan at *w* and doors at *o*.

2693. Air-Compressor Building.—The air-compressor building should be about 30 × 40 feet. This will allow the introducing of three compressors, 22″ × 24″, or the same building will be wide enough for two 26″ × 32″ compressors.

The former require a foundation space of 5′ × 21′ 6″. There should be 4 ft. space between the foundations of air-compressors, and about 10 ft. should be allowed from the ends of the compressors to the walls of the building, or more, depending whether there are any long rods to be drawn out at the steam-cylinder end for repairs. At the air-compressing end an arrangement is necessary for an inlet of fresh air drawn from outdoors, if the indoor air is not cool enough.

An air receiver will require some space in a corner of the building, unless it is located underground.

Connection from the water-supply is necessary to furnish water to the water-jacket or pipes of the compressor for cooling the air.

2694. Electric-Power Plant.—A building 30 × 40 feet will be of sufficient size for generating machinery of about 200 to 300 H. P., where power is to be furnished for ordinary haulage, coal cutting, and pumping at distant swamps and dips underground. The size of the building will vary from this to about 60 × 100 feet, where the generating machinery is from 600 to 800 H. P.

In smaller plants there may be one or two driving engines, each connected with two 40 to 80 horsepower generators, which are belted directly to two fly-wheels on an engine, the belting being about 17 to 26 feet from center to center of shafts.

In larger plants, the best arrangement is to have two engines, each of sufficient power to run the whole plant, and each connected with belting to the same countershaft, on which are pulleys that may be belted to six or ten generators of from 40 to 80 H. P. The countershaft may be in two parts, and connected at its center with a clutch pulley, so as to throw out half of the plant when not needed.

The distance from the center of the engine shaft to the countershaft will be about 30 or 40 feet, and from the countershaft to the center of the generator shaft about 17 to 26 feet.

The location of the plant is not necessarily very near the mine opening, and if there is any convenient water-power in the neighborhood, it should be located at that point.

If the cost of the plant can be incurred, and the use of electricity is not excluded by the presence of gas where the wires are located, or other conditions, it may be used for haulage underground.

Electricity is also used for coal cutting and pumping at distant points underground, where the conditions permit of its use.

2695. Blacksmith Shop.—This may vary in size from about 15 feet square, for small operations, to about 30 feet square for more extensive work.

The location should be convenient for receiving tools for sharpening from the miners as they go to and from the mine, or for sending them there from the inside.

It should be alongside of the carpenter shop, for handling irons back and forth for drift-car repairs; also near the machine-shop, for repairs to machinery needing work done in both places.

The convenience for shoeing mules at the stable outside or underground should also be considered.

There should be 1 to 3 forges and anvils. Blast should be furnished to forges by a blower driven by some existing power, if convenient.

The shop should also be provided with proper work-benches, closets, and racks for pieces of iron, drill-press, and an iron bender, if the work requires it.

2696. Tool House.—A tool house 15 × 15 feet or 15 × 30 feet, as required, may be provided in a building adjoining the blacksmith shop or near it, where miners' picks may be placed on racks, before and after sharpening, also the drills and other tools of rock gangs and other day hands.

If the tool house is mainly for holding shovels, picks, etc., of outside laboring gangs who use them for cleaning coal, dumping rock, repairing track, or handling material, its location at a point central to this work is to be desired.

2697. Carpenter Shop.—This will be from 15 × 20 feet to 30 × 50 feet in size, according to amount of work and drift-car repairs to be done. It should be located handy to the mine and near the empty return tracks for receiving crippled and despatching new or repaired cars. It should be convenient to the blacksmith shop for work required on car iron, and near the lumber-yard. It should be provided with necessary work-benches, closets for tools, and bins for nails, bolts, screws, and mine-car fittings.

A stock of mine-car wheels and axles may be kept in a shed near the carpenter shop, unless such are stored in the iron house. A grindstone should be provided, preferably outside the shop, so that miners and employees can use it.

If rollers for rope haulage are to be turned, there should also be a wood-turning lathe, which should be run by power, if convenient.

2698. Machine-Shop.—Ordinarily, a site central to the surface machinery should be selected for the machine-shop. This is most advantageous where operations do not involve much machinery, and the number of machinists and

helpers is few, and their duties can include oiling, attending the fan-engine and other machinery not requiring continual attention.

Where operations involve more machinery, and the work is sufficiently extensive to require continual attendance of machinists and helpers, each to his special line of work, as bench machinists outside and pipe-fitters underground, the location of the shops may be at any convenient point, so that machinery from the mine can be readily conveyed thereto and the outside machinery readily attended to.

There should be plenty of room outside the shops for the depositing of machinery needing repairs, or that which is again in readiness for use. This space is also useful for pipe-fitting and the testing and repair of quantities of pipe that have been removed from the mine and accumulated; also for the uncoiling of ropes for repairs and splicing.

The location should also be near the blacksmith shops, for the convenience of work which requires being handled in both places, and near the stock of iron piping and supply room.

If it should be necessary to have machinery in the shop run by power, its location should be studied with reference to transferring power by line shafting or belting from some existing engine, as one operating a saw, shaking or revolving screens, forge blower, or inclined hoist for lumber and material. The advantage of a location for readily handling the work should have first consideration, even if an independent engine is necessary to furnish the power.

Where the amount of work is small, the shop need be large enough only for a working bench, racks, shelves, and closets, for the convenient arrangement of machinists' tools and such few supplies and fittings required for immediate needs. A building $12' \times 20'$ will be large enough in this case.

It will be necessary to increase the size of the shop with the increase of machinery in mining operations and work required for its maintenance and repairs.

A large machine-shop is not necessary, except in isolated

locations, where, due to distance and time required in sending for and receiving parts for repairs, the operations would be seriously delayed or interrupted. In this case, it is rarely necessary to provide for repairs to large parts of machines. Generally, the parts most subject to breakage are kept in duplicate, and it can be arranged with the manufacturers of special machines to use a telegraphic code for the prompt shipment of large duplicate parts, which will generally be delivered in about as short a time as they can be turned out by an extensively equipped machine-shop, furnished and maintained at an expense that in the end will amount to more than may be involved by any delay to operations in the time required to secure large duplicate parts by a telegraphic code.

A shop 30′ × 50′ may be large enough for the requirements of mines utilizing machinery to the fullest degree, and where machine-shops exist in the region doing custom work, to whom special work may be assigned.

The usual machinists' tools should be provided, a set for each man or helper, including such tools as he needs. Benches fitted with vises, closets and shelves for tools and supplies, racks for larger fittings and tools should be of such capacity as the needs of the mines may require. Stock and dies, pipe-cutting and threading tools, and drill-press should be in such sizes as the work requires.

Tools should be at hand for properly handling such work as may arise with boilers, engines, pumps, fans, etc., that may be in use. Where drift-car irons are shaped, a punch for bolt-holes is desirable.

An emery grinder saves file work, where much sharpening of saws or drills is required.

If locomotive, compressed-air, or electric plants are used in the operations, the repairs attendant to these machines, and the advisability of undertaking small repairs to pumps and engine valves and cylinders, may make it necessary to have also a small lathe and planer.

2699. Material and Lumber Yard.—If much lumber and material are received by railroad, it is desirable,

where the conditions will permit, to unload at some convenient point from the railroad-car, and at the same time be near the mine opening, carpenter shop, and saw.

If the most convenient location for a lumber-yard near the mine is at some distance from the railroad-tracks, or at a higher elevation, the means for conveying the material thereto, under different conditions, has been indicated in the various plans for surface arrangements.

The lighter lumber, which is to be cut at the saw or for use in the carpenter shop, should be nearer these points. Props, if they are delivered already sawed, and other heavy lumber should be deposited nearer the mine than the saw. Steel rails will generally be deposited in the material yard, and scrap-iron should be gathered and deposited at some convenient point or in the material yard, to be shipped as required. Space can also be provided here for the stock of brick, lime, and sand needed in the operations.

2700. Sawmill.—A circular saw is generally needed in isolated locations, or where much cutting of lumber of various sizes is required from stock lumber received from a distance, or where standing timber is to be cut.

It should be located handy to the carpenter shop and to the lumber-yard near the mine, unless it is desired to have it convenient to standing timber for cutting.

2701. Supply Room.—The size of the supply room will be from 20 × 20 feet to 30 × 50 feet, or larger, depending upon the nature of operations, machinery, and the variety and quantity of supplies it is necessary to have on hand.

The stock will include, principally, miners', carpenters', and blacksmiths' tools, unless they are carried at a store; also nails, screws, bolts, spikes, mine-car fittings, brattice cloth, harness, and fittings and parts for repairs to such machinery as engines, boilers, fans, pumps, compressed-air or electric machines, belting, steam and water pipe fittings.

The supply room should be located handy to the shops for issuing supplies, and also for the receipt of supplies by railroad or otherwise.

2702. Iron House.—Generally, a building 12 × 24 feet will be of sufficient size for storing pipe, round and bar iron, tool steel, sheet iron, wheels, axles, etc. It should be located handy to the blacksmith and machine shops.

Piping may be stored at the material yard; wheels and axles may be stored there or at the carpenter shop.

2703. Oil House.—Oil of all kinds may be kept at a store, where it is sold to miners, and issued in stated quantities at intervals for mine use, drift cars, machinery, etc.

In this case, there should be small oil-cans having a capacity of from 1 to 10 gallons. These sizes will be suitable for the various requirements.

These should be kept on iron trays to catch all leakage, and securely enclosed, and at a safe distance from waste and other inflammable materials.

If the oil house is located near the mine, it should be handy to the storekeeper for issuing, but at some distance from surrounding buildings. It may thus be issued in smaller quantities for machinery and mine use, but the same precautions must be taken wherever it is used.

Oil may be held in barrels in the storehouse, but it is safer if transferred to iron tanks of about 20 barrels capacity each for miners', black, and coal oil. Special engine and cylinder oils may be stored in tanks of 2 to 5 barrels capacity.

In warm climates it is advisable to transfer oil to iron tanks to prevent loss from leakage in barrels.

If the heating of car oil is necessary in cold weather, it should be done on a coil of steam-pipe, if the point at which cars are oiled is near the tipple or other structure.

2704. Hay and feed should be stored handy to the stables and to storekeeper for issuing. At shaft mines, the feed should be conveniently reached by a track, so that feed can be loaded on a mine-car at the storehouse and hauled to the shaft for lowering to the stables underground. This should also be the case if feed is sent underground at noonday, at mines opened otherwise. The feed should be stored

at some distance from other buildings, as a precaution against fire.

2705. Stable.—The stable should be located so that mules can readily pass between it and the entrance to the mine, and handy to a wagon road leading to points where hauling may be necessary. It should be handy to the blacksmith shop, for shoeing mules. Where it is possible, stables should be located where a yard or pasture can be enclosed for mules needing rest. A harness and wagon room should be located alongside of the stable.

2706. Powder House.—This may vary from 8 feet square to 16 × 20 feet, for holding small quantities of explosives or one or two carloads. It should be built on the opposite side of a hill from the mine, if possible, and not less than 1,000 feet, and a mile away from other buildings is preferable, if the explosives are in large quantities and can be reached by a wagon road. The building should be of brick, stone, or iron, and should have an iron door. There should be an opening in the door, and another at the end of the building, for ventilation and to prevent explosives from absorbing moisture from the ground, etc.

2707. Wash-House.—This may be located at any place where space will permit, convenient for employees, or near the shops, or on the slope of some ground where the drainage will be perfect. It is sometimes located near the boilers, with the view of drawing hot water therefrom, but this is objectionable.

An efficient arrangement inside is to construct a cheap brick furnace with grate bars 2 feet above ground and walls 4 feet high, on top of which may be placed an iron tank, or some old boiler may be set between higher walls. Refuse coal and timber may be used for heating the water, which can be drawn off into tubs; and a water-pipe with a float and faucet can be arranged to keep the water-supply in the tank at the same level.

Racks can be arranged around the furnace for drying clothes, and closets provided around the walls, if needed.

2708. Weighman's Office.—This should be at the tipple, or near the point where the cars are weighed, so that the scale-beam can be erected therein.

If checks are to be issued, and the weights posted daily, provision should be made for proper space around the building, so that the daily weigh sheets can be posted conveniently for the inspection of miners, and check boards arranged for holding a supply of returned checks and new ones for issue.

2709. Mine-Clerk's Office.—If the weighman performs the aforesaid work, a mine clerk may attend to keeping the time of employees, and may have charge of storerooms, supplies, etc., and the issuing of the same, in which case a storekeeper is not needed.

The mine-clerk's office should be located handy to the storeroom and supplies, so that the taking of time can be most readily attended to.

If, however, the mine clerk attends to posting of weights of coal and issuing and receiving checks and keeping of time only, this office will be most conveniently situated near the tipple, if not too distant, or near the mine entrance, so that weigh sheets may be readily inspected by miners in passing in and out of the mine.

2710. Storekeeper's Office.—This is most conveniently situated in the storeroom. If in a separate building, it should be handy to the point of unloading material, supplies, etc., so as to check the same, and convenient to the different storehouses for issuing material to shops and the mines.

2711. Shipping-Clerk's Office.—It may also be necessary to have a shipping-clerk's office near the tipple to attend to shipments of coal, unless the work can be divided as follows :

(1) Weighman to attend to the weighing, posting, and checks, and the mine clerk to attend to time-keeping and shipping; or (2) the weighman to attend to the weighing, and the mine clerk to attend to posting weights, checks, and

shipping, and storekeeper to attend to the supplies and time-keeping.

2712. Mine Office.—An office for the foreman or superintendent, as the organization may require, should be located centrally to the mine operations.

2713. Lamp-Inspector's Office.—At gaseous mines, an office should be provided near the mine opening for the gathering, inspecting, cleaning, and repairing of safety-lamps.

This office should be provided with apparatus for testing lamps and for testing samples of air gathered at points underground, where it is desired to know the amount of gas present, if any. In less fiery mines, the inspection of the lamps may be done by the fire bosses, at points underground, outside of the fire limits. An apparatus should also be at hand to permit of entering gassy places, in case of accident.

2714. Doctor's Office and Hospital.—In operations isolated from settled communities, the above buildings may be necessary, provided with proper surgical instruments, splints, bandages, and medicines, for treating burns, broken bones, and men overcome by carbonic acid gas, after-damp, or other accidents.

The hospital should be provided with cots and other suitable furniture. One or more stretchers should be kept near the mine, for carrying injured men.

2715. Store.—If a store is needed in connection with the operations, it should be located near the railroad-track, if possible, to facilitate the handling of merchandise; it need not necessarily be near the mine, but convenient to the miners' houses.

2716. Miners' Houses.—These should be located at some little distance from the mine buildings. A plot of ground about 50′ × 100′ should be allowed to each house, or, if the space can be allowed, about 300 feet square, so that employees can do some gardening. This should be fenced in; and it may be necessary to lay pipes to the dwellings, to provide a water-supply.

SURFACE ARRANGEMENTS OF ANTHRACITE MINES.

DEFINITIONS.

2717. The name **colliery** is given to the entire coal-mine plant. It embraces both the surface improvements and the workings underground.

The term **mine** is applied to the underground workings, shafts, tunnels, and other passageways.

2718. A **shaft** is a vertical opening through the strata which is or may be used for the purpose of ventilation or drainage, or for hoisting men or material in connection with the mining of coal.

2719. A **slope** is an inclined opening used for the same purposes as a shaft.

2720. A **drift** is a horizontal or nearly horizontal passage driven in the coal seam from the surface.

2721. A **tunnel** is a horizontal or nearly horizontal passage driven across the measures.

2722. A **stripping** is an open working, where the soil or débris on top of the seam has been removed preparatory to mining it by an open cut.

2723. The **breaker** is the structure containing the machinery used in the preparation of the coal.

GENERAL PLAN OF ARRANGEMENTS.

2724. The arrangements of the buildings, tracks, etc., at anthracite collieries, or what are generally termed the outside improvements, differ considerably. This is due largely to the topography of the surface.

For notice of the copyright, see page immediately following the title page.

At a colliery with a shaft opening, the general arrangements differ somewhat from those collieries where the coal is opened by a slope, drift, tunnel, or stripping.

In case of a shaft, the surface is more or less of the same elevation, while for a slope, drift, or tunnel, a sloping surface is more general.

In every case, however, at a well-arranged plant the structures erected upon the surface should all be on the same meridian. In this way the sides and ends of the different structures are arranged parallel to one another. This method, if followed, will aid materially in the construction of maps; besides, it gives a better appearance to the plant than if the different structures are located at random.

At an anthracite colliery there may be a shaft, slope, drift, tunnel, or stripping; or it may be possible that all of these openings exist at the same colliery.

If the opening is a shaft, there is a head-frame; if a slope, provided the slope is on a line with the breaker, there is an inclined plane.

In case the slope is at some distance from the breaker, there is an inclined plane and trestle, an inclined plane and tracks on the surface, or a slope landing; in the last two cases the coal can reach the breaker either over a trestle, or it can be raised by steam-power up a vertical hoist or up an inclined plane.

In case of a drift, tunnel, or stripping, there are tracks leading to the foot of an inclined plane or vertical hoist, or tracks leading to a trestle, where the coal is dumped directly into the breaker without using steam-power to elevate it.

2725. Besides the above, the following are located on the surface:

The *hoisting-engine houses*, with their engines, drums, brakes, etc.

The different *boiler houses*, with their boilers, feeding apparatus, and coal-bins.

The *breaker*, with its machinery for cracking and sizing the coal, and the breaker engine.

The *blacksmith and carpenter shops.*

One or more *fans* used for ventilating the underground workings.

Railroad-tracks.

Offices: General shipping, and for the superintendent and engineers.

Wash-house for miners.

Supply houses: oils, cotton, iron, etc.

Powder house.

Pumping-engine houses, containing pumps to furnish water to wash the coal and supply the boilers.

Water-tanks.

Culm (or dirt, or waste) and *rock banks.*

Different arrangements for getting rid of culm; as by dirt plane, conveyors, trestles, blowers, etc.

2726. Fig. 986 is a plan of the outside improvements at an anthracite colliery, showing the arrangement of the different structures, tracks, dams, etc.

This plan shows that the breaker *a* is fed by one main slope *b*, one tender slope *c*, two tunnels *d* and *e*, and one shaft not shown in this plan, but the tracks leading thereto are shown in part. The coal from the main slope *b* is hoisted up a double-track plane *a'*, leading to the breaker, by means of the main hoisting-engine *f*. The coal from the tender slope *c* is hoisted by the hoisting-engine *g* and allowed to run over a drawbridge. After running over this bridge, it is taken around the loop *h* into the tunnel *d*, in order to have the car ascend plane *a'* with the door in front. The coal from the two tunnels *d* and *e*, the tender slope *c*, and the shaft is all brought to the mouth of the main slope *b* and hoisted up the plane *a'* by means of an engine with friction drum located under the breaker. The plane *a'* contains a single track in connection with the double track used for hoisting out of the main slope.

The grades of the tracks leading to and from the tender slope *c* and tunnel *d* are so arranged that the cars run by gravity. The cars from tunnel *e* and those from the shaft are hauled by a locomotive which is housed in the locomotive

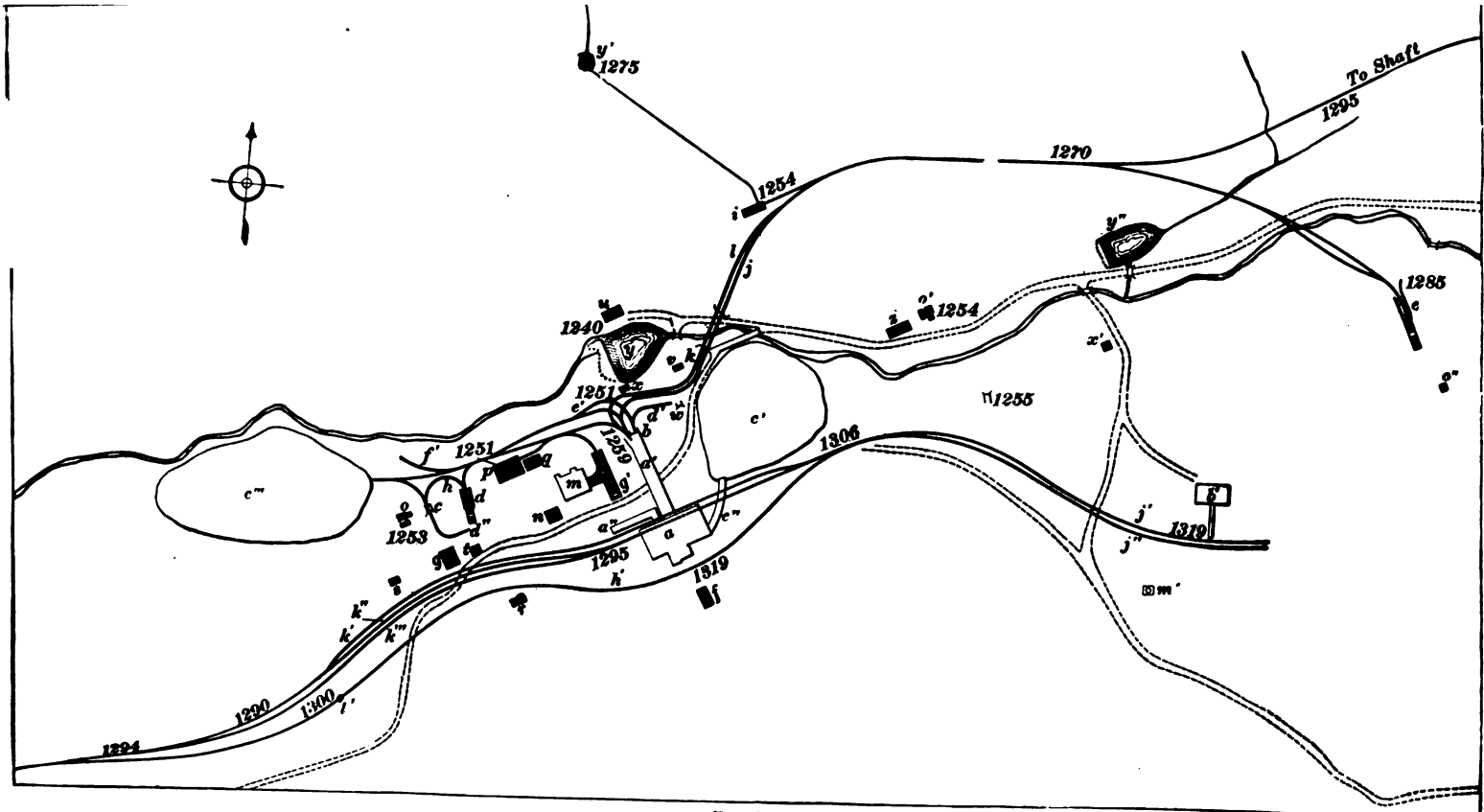
To Shaft
1295
1270
1254
1275
1240
1251
1259
1253
1306
1255
1285
1319
1295
1300
1290
1294

FIG 986.

house *i*. The loaded cars are run in on track *j*. The locomotive, being in front of the loaded cars, passes over the cross-over *k* to the empty track, which is elevated above the two loaded tracks at the foot of the plane, and continues on a down grade of 2 to 1 per cent. to the point marked *l*. At the mouth of the tender slope *c* is shown the backswitch, to turn the cars so that they may descend the slope with the door in front.

The surface being a sloping one, the boiler house *m* is so arranged that the ashes are taken out in a small dump-car. The coal used in this boiler house is furnished by a small dump-car running on an overhead trestle, the coal-bins being located within the boiler house. This boiler house furnishes steam for the machinery in the immediate neighborhood, the pumps inside the mine, and heat for neighboring buildings.

There is still another boiler house, to furnish steam for the shaft engines, etc., which is located at a considerable distance from the boiler house *m*.

The water-tank *n* is used to furnish the boilers with the necessary fresh-water supply.

The ventilating fans *o*, *o'*, and *o''* are used to ventilate the different inside workings.

In the blacksmith and carpenter shop *p* the necessary repair work of the colliery is done.

The supply house *q* is used in connection with the blacksmith and carpenter shops, so that the necessary supply of iron, bolts, nails, etc., can always be kept on hand and under cover.

The office *r* is used by the superintendent and shipper, and is so arranged and located that the shipper has a commanding view of the empty and loaded tracks.

The powder house *s* contains every explosive used for blasting in and about the colliery.

At the supply house *t* the miners are supplied with oil, cotton, shovels, and other necessary articles that are used about a colliery.

The engineer's office *u* is where the maps, sections, and different plans used at the colliery are made.

The wash-house *v* is a building where the men can wash and change their clothing. This building is located so that it is within easy reach of the traveling way *w* of the mine.

In the pump-house *x* is a pump which furnishes the water for the different screens used in the sizing of coal. It also furnishes water for the jigs, which are used for separating the slate from the coal, and also the water for the lip screens, over which the coal passes into the railroad-cars for shipment. This pump also furnishes the necessary water in case of fire.

The dam *y* holds the supply of water for the pump located at *x*. This dam receives water from the creek, shown in the plan; but in summer, when the creek supply is small, the water from the mine is pumped into it. In very dry weather, the water from the lip screens is also run back into this dam and used over and over again.

The dam *y'* furnishes the water for the locomotives; the service-pipe leading from this dam to the locomotive house *i* is also shown.

The water that is used for steam purposes is furnished by the dam *y''*, the pumping station *x'* being used in connection with this dam.

All the necessary sawed timber used at the colliery is cut in the steam sawmill *z*.

In connection with the barn *b'* a small trestle with narrow-gauge track leading to the main railroad-tracks is shown. This track is used to convey the grain from the railroad-cars to the different bins and places of storage in the barn. In the barn a place is set apart for the colliery ambulance, which is used in case of accident about the colliery.

This barn, it will be noticed, is not parallel with the other buildings, but is located to suit the railroad-tracks.

The rock and slate bank *c'* is located on a steeply sloping side-hill, and the trestle *c''* connects the breaker with it.

The slush bank (dirt or waste bank) *c'''* is where the culm, which is conveyed in troughs by means of water, is deposited.

The tracks d' and d'' lead to the timber-yards, where the timber to be used in the mine is sized and loaded.

The damaged cars are taken off the main slope and conveyed by the track e' to the carpenter shop for repairs.

The ashes from the boiler house are conveyed over the track f' to the ash-dump.

The pit g' is used to hold a mine-car which conveys the lip-coal screenings coming from the lump-coal chute a'' to the foot of the plane a', where it is hoisted and dumped into the breaker.

The turnout h' leading from the main railroad-track is used to run the empty cars over to the empty sidings j' and j''. From here the empty cars are run under the breaker, where they are loaded and run on to the loaded sidings or tail tracks k', k'', and k''', where the loaded cars are allowed to accumulate preparatory to making up a "trip" to be shipped to market.

At l' is shown a small opening driven to the surface from the inside workings. This opening is made to dump the condemned coal into, which by means of a chute is loaded into a mine-car, raised to the surface, and again dumped into the breaker and resized and reseparated. This method of handling the condemned coal is a new one, and proves very satisfactory.

From the artesian well m' the water is pumped during the dry seasons of the year.

The different figures, or numerals, shown on this plan are the elevations above tide at those points.

TABLE OF SURFACE ARRANGEMENTS.

2727. In the following list the letters refer to Fig. 986.

(a) Breaker.
(b) Main slope.
(c) Tender slope.
(d), (e) Tunnels.
(a') Inclined plane, with three tracks leading to breaker.
(f) Main hoisting-engine.

(g) Hoisting-engine for tender slope.
(h) Loop near tunnel d.
(i) Locomotive house.
(j) Loaded track over bridge.
(k) Cross-over on bridge.
(l) Empty track.
(m) Boiler house.
(n) Water-tank.
(o), (o'), (o'') } Ventilating fans.
(p) Blacksmith and carpenter shop.
(q) Supply house to blacksmith shop.
(r) Superintendent and shipper's offices.
(s) Powder house.
(t) Supply house: oil, cotton, etc.
(u) Engineer's office.
(v) Wash-house.
(w) Traveling way.
(x) Pump-house.
(y) Dam for breaker.
(y') Dam for locomotive.
(y'') Dam for steam supply.
(x') Pumping station for steam supply.
(z) Sawmill.
(b') Barn.
(c') Rock and slate bank.
(c'') Trestle leading to rock and slate bank.
(c''') Slush bank.
(d'), (d'') } Tracks leading to timber-yards.
(e') Track to take cars off main slope.
(f') Ash-dump track.
(g') Pit for lump-coal screenings.
(a'') Lump-coal chute.
(h') Main turnout.
(j'), (j'') } Empty turnouts.

(*k'*)
(*k''*) } Loaded turnouts.
(*k'''*)
(*l'*) Condemned-coal chute.
(*m'*) Artesian well.

THE DESIGN OF A PLANT.

BREAKERS.

2728. In the designing of a plant, great care and judgment must be exercised. The designer must look to the future of the plant and not merely to its immediate requirements, unless only a temporary structure, commonly known as a **coffee-mill,** or **penitentiary,** is required.

These structures are merely small breakers, used where overlying veins are worked that can not be mined from the main openings, or where pillars are robbed that have been left intact around the main openings, on account of some cave-in of the main haulage roads. They are also used to supply the demand for coal for domestic purposes, or in some out-of-the-way place where the farmers are supplied with fuel.

After the main openings for the colliery have been decided upon, very rude temporary structures are erected merely to do the work of "opening up," as it is termed. These temporary structures are so erected as not to interfere with the subsequent erection of the permanent ones.

The first thing for the engineer to do is to run section lines and locate all outcrops and streams. Sections are then constructed and a temporary map made.

A meridian is next selected; if the opening is a slope, the slope line is frequently taken, which is the line on which the slope is driven. If the opening is a shaft, a center line of one of the hoistways is frequently taken; generally this line is in the direction of the main haulage ways at the foot of the shaft.

After the meridian has been selected, all the buildings, or as many as practicable, are erected with their sides parallel to the meridian, so as to secure uniformity.

In every case the plant must be as compact as possible, and at the same time comply with all the laws that are laid down for its construction.

2729. Site for Breaker.—The first thing to consider, after the opening or openings have been decided upon, is the site for the breaker. This, in every case, will depend upon the mine opening or openings and the topography of the country. Where the topography of the surface permits, the location of the breaker should be at a point low enough to bring the top of the breaker below the level of the mouth of the shaft, slope, drift, tunnel, or stripping, so that a descending grade can be obtained from the opening to where the cars are dumped. Such a location is preferable to all others, but it can not always be obtained.

In some cases it is found better to locate the breaker in line with the slope, so that the cars can be hoisted and dumped directly into the breaker.

In many places where gravity can not be used, or where hoisting directly into the breaker is impossible, a rope or chain system is used, or, frequently, a locomotive or an electric motor conveys the coal from the opening to the location of the breaker.

One of the main points to be taken into consideration, in choosing a site for a breaker, is the location of the shipping tracks, for in all cases the breaker is so located that railroad-tracks can be constructed with sidings having grade sufficient to move the cars by gravity.

The location of the breaker being decided upon, the excavations for the masonry foundations are immediately pushed forward.

2730. The Masonry for a Breaker.—This is a class of work that is a matter of choice; some prefer a continuous wall, where a sill is used, as in Fig. 987, where *a* shows a side view and *b* an end view of the wall, with sill and post in place.

Others prefer a pier *c* and capstone *d*, as shown in Fig. 987. In this case the post rests either directly on the cap-

stone or, as is often the case, a small piece of No. 8 sheet iron *e* is placed between the post and capstone. Or, a cast-iron shoe may be used instead of the sheet iron. Still others prefer a continuous wall *f*, with capstones *g*, *g'* for the posts, also

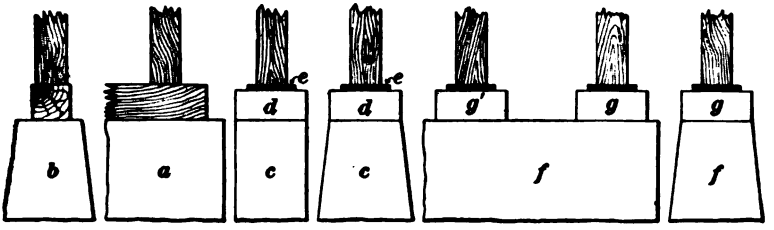

FIG. 987.

as shown in Fig. 987. As in the above case, either a piece of sheet iron is used or a cast-iron shoe is placed between the post and capstone. These walls are generally hammer-dressed, set in mortar or cement, while the capstones are all tool-dressed.

STEAM PLANT.

2731. The breaker location being determined upon, the next site to be selected is for the **steam plant.** The choice of location is influenced by the Anthracite Mine Law of Pennsylvania, which specifies that "it shall not be lawful to place any boiler or boilers for the purpose of generating steam under nor nearer than one hundred (100) feet to any coal-breaker or other structure in which persons are employed in the preparation of coal."

The location of the steam plant for the breaker and the immediate hoisting and pumping engines should be such that the arrangement for supplying the plant with fuel is as simple and inexpensive as possible. Very often the topography of the surface permits the erection of a chute, through which the coal is run direct from the breaker to the plant, and distributed by what are called **telegraphs.** At times it is very convenient to put up a small pocket for the boiler supply, and convey the coal to the boilers by means of an overhead trestle and small dumper.

In another case, it may be convenient to put up a system of conveyors. In every instance, two main objects must be kept in view: First, that of supplying the steam plant with fuel; second, that of having the plant located as centrally as possible, so that the steam, in traveling to the different places of usage, will be subjected to as little condensation as possible.

One great point is to have the steam plant all under one cover, and not to have one set of boilers for the breaker at one place and a set for the hoisting-engines at another.

Of course, where the openings are at a very great distance from the main structure, it is not to be expected that all the boilers can be under the same cover.

2732. The handling of the ashes from a steam plant is always a secondary consideration. Frequently, the surface will permit of the erection of a plant where a pit *a*, as shown in Fig. 988, can be dug directly in front of the boilers, so that a small dump-car can be used to convey the ashes to the ash-dump. Sometimes a line of conveyors is put in to handle the ashes in this pit.

In case a pit is constructed and a dump-car used, the pit should be open at both ends, otherwise there is a possibility of gases accumulating in the pit. A case is on record where the pit was closed at one end and deadly gases accumulated. The continued absence of the man removing the ashes was noticed, and, upon searching for him, he was found dead in the pit from having inhaled the gases. A method sometimes employed in removing the ashes is by a small dump-car running on a track located directly in front of the fire-box.

Most frequently a cart and mule or a man and wheelbarrow are used.

2733. The steam-boilers in use at the present day are so numerous that the engineer or person in charge will have no trouble in making a selection to suit his wants. The old style of cylindrical boilers is giving place to a style that is better adapted for the mines of the anthracite region.

The Stirling water-tube boiler, the Babcock & Wilcox water-tube, the National water-tube boiler, and others of a similar type are in numerous instances replacing the old

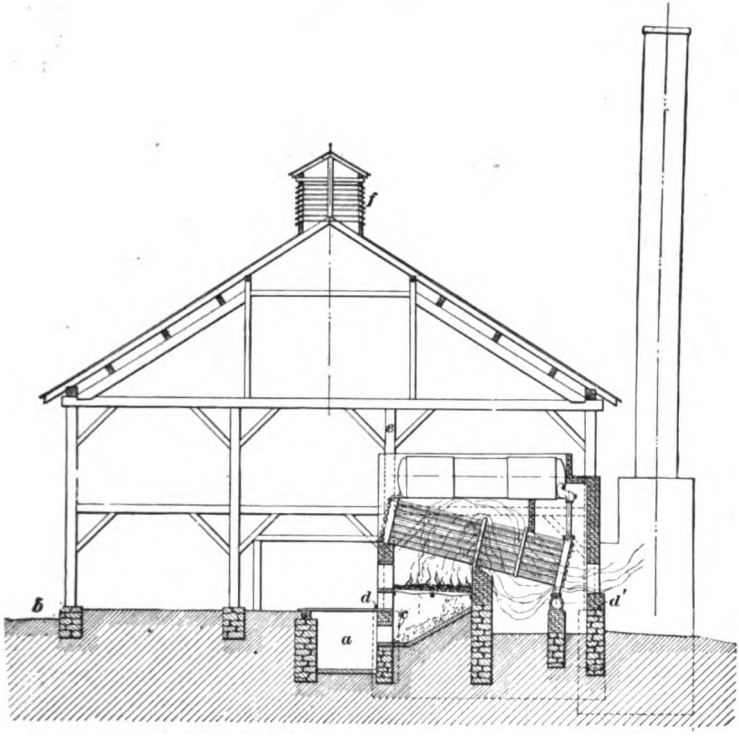

FIG. 988.

style of cylinder boilers. They are better steam-generators, and are more efficient for the same amount of coal used.

2734. It matters not what boiler is decided upon, the foundation for the same should be very substantial. In excavating, a good solid bottom must be secured, so that in after years no trouble will arise from the walls settling.

The stonework upon which brick walls are erected to enclose the boilers should be brought up out of the ground at least to such a height that the wall will be on the same level as the front piers supporting the boiler house, as shown

at *b* and *c* in Fig. 988. If this method is followed, scarcely any trouble will be experienced when the boiler-house floor is laid.

Generally, the stonework is simply a hammer-dressed wall. The brickwork is generally set back from the face of the stonework from 6 to 8 inches, as shown at *d* and *d'*, Fig. 988.

BOILER HOUSE.

2735. The boiler houses, as commonly built, are frame structures. The rudest kind of a shed answers the purpose at some collieries, but quite substantial stone and brick houses are seen at others.

Fig. 988 shows the side elevation of a framing for a boiler house often used in the anthracite region. The sheathing most commonly used is 1-inch white pine or hemlock boards or sheets of corrugated iron.

The covering for the roof may be either shingles, corrugated iron, or slate. In case a shingle or corrugated-iron roof is put on, it should be coated with a good covering of mineral paint. Some prefer a slate roof to all others for boiler houses. They complain of the shingles warping on account of the steam, and the iron corroding in case both sides are not kept well covered with a coat of paint.

In the designing of a boiler house, the members of the different trusses must be made high enough above the boilers so that they do not interfere with the erection of the steam connections.

Another point to have in view is the location of the doors, so as to give the men in charge of the boilers the benefit of any breeze in summer-time. To do this, the post *e* holding the door should be set back a little from the face of the boilers. The boiler house should be constructed so as to give ample room in front of the boilers for a supply of coal that will last several days. Every boiler house should have a ventilator *f*, to allow the steam and gases to escape. The floor of the boiler house should be laid so that it slopes towards the boiler.

2736. It is economical to have a feed-water heater located in the boiler house or at some place near by, so that the water before entering the boilers can be heated. There are various forms of feed-water heaters in use; one that is very simple in construction is a cylindrical boiler fitted up for the purpose. The water is heated by running the exhaust-steam into it from the breaker engine, the hoisting-engine, a pumping-engine, or from the fan-engine. It is also arranged so that a jet of steam can be used at any time, as at night, when the engines are not in use.

2737. In the anthracite regions at the present day much attention is paid to the different methods that utilize the finer sizes of coal and culm for steam purposes. The most improved system of grates and blowing apparatus is used, whereby the finer sizes of coal, and very often culm, can be burned.

Where culm is used, a great deal of hard manual labor is required. To overcome this, a mechanical stoker is sometimes employed, which can be easily attached to almost any stationary boiler in use at the present time. With this arrangement, the manual labor is reduced to a minimum.

HOISTING-ENGINES.

2738. The location of the different hoisting-engines used about a colliery depends upon the kind of opening, whether it is a shaft or slope, upon the topography of the surface, and the location of the opening, whether it is in connection with the breaker or at some distance from it.

With a shaft opening, the distance between the hoisting-engine and head-frame should be such that the rope will coil regularly on the drum. It should also be located so that it will not be necessary to put carrying pulleys between the drum and head-frame to overcome the violent oscillation of the rope that results from an improper location.

2739. In case of a shaft, an arrangement called a **vertical hoist** is employed, except where the coal is conveyed to the top of the breaker by means of tracks or chute,

or, as is very often the case, by an **inclined hoist.** For the Anthracite Mine Law of Pennsylvania specifies that "no inflammable structure, other than a frame to sustain pulleys or sheaves, shall be erected over the entrance of any opening connecting the surface with the underground workings of any mine, and no breaker or other inflammable structure or structures for the preparation or storage of coal shall be erected nearer than 200 feet to any such opening." In case of a vertical hoist, the winding-engine used to operate this hoist is generally located in the lower part of the breaker, or the breaker engine may be used, the drum being provided with a friction-clutch.

At collieries where the coal is raised through a slope, and the slope is connected with the main structure by an inclined plane, the location of the engine, if the topography will permit, is on line with the slope at some point back of the breaker. On a side-hill this location is preferable to all others.

2740. Where hoisting is done over the breaker, the winding-engine is sometimes located within the lower part of the breaker. This is very poor practice, and should be avoided, for a number of breakers have been destroyed by fire, the origin of which was directly or indirectly traceable to the engine room. Again, the rope passing through the breaker on its way to the drum is an annoyance, and often interferes with the erection of improvements that are desirable in the breaker after it has been in operation for some time.

2741. In case of slopes that are located some distance from the main structure, the drum for the winding-engine or engines should be located one hundred and fifty (150) to two hundred (200) feet from the knuckle, so as to secure a sufficient distance between the knuckle pulleys and the drum, that the rope may coil regularly on the drum. In case the drum is above the level of the tracks, the height in connection with the distance should be such as not to interfere with the hitching and unhitching of the car, and at

the same time give ample room for the arrangement of the empty and loaded tracks.

When the winding-engine and drum are placed below the level of the slope knuckle, the rope is sometimes passed through a slide, twelve to eighteen feet long, working like a cross-head between guides. The slide is attached to a counterweight, and the hole through which the rope plays, although large enough to pass the rope freely, will not pass the rope-socket, the hook, or a stop placed on the chain. After the loaded car is detached, the drum is turned back one-quarter or one-third of a revolution; the counterweight upon the rope keeps it tight upon the drum, and pulls it out to within a few feet of the knuckles, where the empty car is to be attached.

In many cases where the winding-engine is below the slope knuckle, the rope coming from the winding drum is passed over a sheave wheel set on a frame, which is built high enough to bring the rope above the level of the tracks at the head of the slope.

2742. At many of the anthracite collieries hoisting-engines are located on the surface to operate inside slopes and shafts. Where such engines are in operation the rope is led from the drum into the mine through a bore-hole, or in many cases it is conveyed through an old breast that is worked to the surface, or through a traveling way, pump way, airway, or an air-shaft opening.

These engines are erected upon the surface, in many cases, to avoid the damaging effects that the steam has on the inside workings when they are located underground; besides, there is then no loss of steam by condensation from conveying it a great distance into the mine. Where these engines are in use, they usually are set from 100 to 150 feet from the bore-hole.

Instead of erecting these engines on the surface to overcome the disadvantage of exhausting into an airway, they are sometimes put down in the mine, and the exhaust from the engines is led into a good-sized bore-hole that has been

lined to keep out the water from the strata it passes through. Bore-holes are also used for conducting the steam into the inside workings from the surface.

2743. Engines that are used to lower and hoist men into and out of the mine (these are generally the main winding-engines) should be separated from all other engines or machinery and from the sound of gongs used for signal purposes for other machinery, so that the attention of the man in charge of the engine will not be drawn away from his work.

2744. Anthracite collieries have all types and classes of engines. The engines used for hoisting purposes are of the horizontal high-pressure type, either direct-acting or geared, single or double.

Where a large number of mine-cars must be handled daily, powerful double direct-acting engines are necessary.

For single-track slopes, engines which have drums loose on the shafts are used. These are prevented from revolving by means of a friction-clutch.

The friction-clutch can be applied to such a drum with equal facility, whether the engine is at rest or in motion. When this arrangement first came into use, the friction-clutch was applied by means of a hand or foot lever, but at present it is applied by steam. The improved device is constructed so as to gradually engage the drum as it is thrown into gear, thus avoiding shock or strain on any part of the engine.

The load is lowered by means of a powerful hand or steam brake, or, at the option of the operator, by the friction itself.

2745. The principal requirements of anthracite winding-engines are:

1. The engine must be thoroughly under the control of the engineer, so that it can (*a*) be quickly stopped when running at full speed, and (*b*) be moved with certainty and nicety through a small fraction of a revolution. This is necessary in landing.

2. It must be capable of being quickly started with full load at any part of the stroke.

3. It must be capable of attaining full speed in two or three revolutions.

4. Great strength in every part is absolutely essential to prevent breakage from the severe shocks to which winding-engines are always subjected.

5. Its construction must be as simple as possible.

6. Every part of the engine and drum should be easily accessible, to facilitate repairs.

2746. Drums.—The drums in use for hoisting-engines are of different types, and are seldom less than 6 feet in diameter.

Cylindrical drums are in more general use than any other type, except for very large shaft engines, where the double conical drum is generally used.

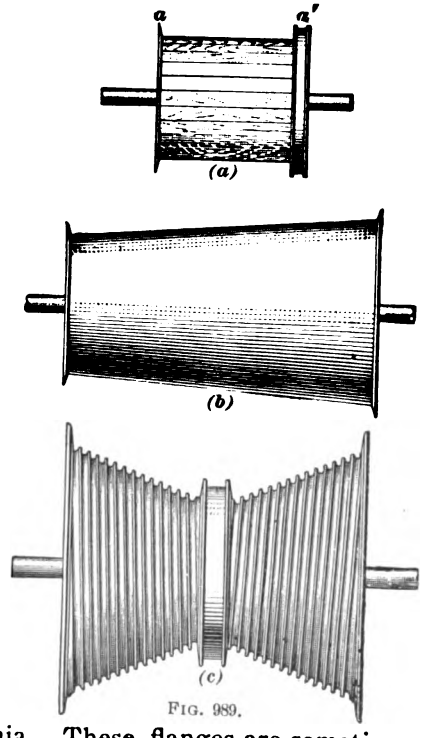

FIG. 989.

2747. In Fig. 989, (*a*), (*b*), and (*c*) show the types of drums generally used at collieries in the anthracite region; (*a*) and (*b*) are for slope engines, and the drum (*c*) for shaft engines.

The type shown at (*a*) is usually constructed with 2 or 3 spiders having 6 or 8 arms, surrounded by a lagging of timber from 6 to 8 inches thick. The part *a* is one of the flanges or horns that are used to comply with Section 15 of the Anthracite Mine Law of Pennsylvania. These flanges are sometimes

cast in one piece with the drum spider, or, as is very often the case, the flanges are cast separately and bolted to the drum.

The place for the brake band is shown at a'. This is sometimes cast in connection with the spider, especially where a steam brake is used.

When the part a' on which the brake band is closed is not cast, blocks from 6 to 8 inches thick are bolted to the lagging of the drum, or the brake is applied directly to the drum laggings. This, of course, is a very poor practice.

The drum (b) is a cast-iron one, and is in use at but few collieries in the anthracite regions.

The double conical drum (c) generally has an attachment on its inner side to adjust the rope. This is of great benefit for shafts, for after the rope has been in use for some time one end or the other needs adjusting.

When the engine is not direct-acting, the spur-wheel used for driving the drum is often placed in the center of the drum, instead of at either end. This has been considered one of the best plans for geared engines, as it reduces and localizes the torsional strain to which the drum shaft is subjected.

2748. Brakes.—A great number of different types of drum brakes are in use at the present time. The old style of brake-blocks are fast giving way to the iron band, which is now in general use throughout the anthracite region. This band is operated by hand or steam-power. In case of a hand-lever, the force is multiplied by using several short levers. Where steam is used to apply the force against the brake-lever, the brake is generally termed a **steam-brake.**

2749. Steam-brakes for hoisting and haulage engines have always been considered very desirable, but trouble was met with in their use on account of the sudden jumping and irregular movement of the piston, and the shock to the cylinder and its connected mechanism at the end of the stroke. This appears to have been overcome in the design of the Zehnder steam-brake, shown in Fig. 990. This consists of two cylinders, the upper one being an air-cylinder

with a port controlled by a valve of peculiar construction near each end. The lower cylinder is a steam-cylinder. Both cylinders are supplied with a piston and piston-rod, connected with each other by a cross-head. On the cross-head connecting the two piston-rods is a pin which is connected with the lever leading to and working the brake device on the drum. The air-cylinder, which receives its air through the valves located on the top, forms an air-cushion which prevents the steam piston striking against

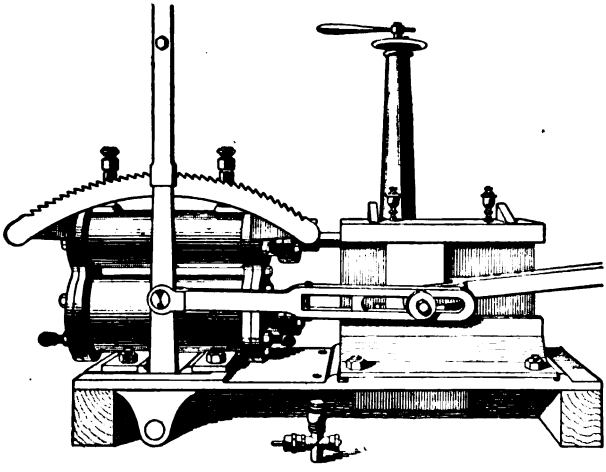

FIG. 990.

the end of the steam-cylinder; a hand-operating lever is attached to the power brake in such a manner that it can be used to set the brake in cases of emergency, and at the same time not interfere with the movements of the steam mechanism.

BREAKER ENGINE.

2750. The breaker engine, which is the engine used to drive the machinery connected with the breaker in the preparation of coal, is generally located in the lower part of the breaker.

There are breakers where the engine is located some

distance away, so as to guard as much as possible against fire.

Where the engine-house is separated from the main structure, a wire rope is used for transmitting the power.

In the latest construction of anthracite breakers, the breaker engine is placed within the main structure. This would seem to indicate the proper place for the engine, for the power will be more direct, and in case of accident the man in charge of the engine can oftentimes discover it before he is signaled.

The breaker engines are generally of the horizontal type, and both single and double ones are in use. Their size will depend upon the amount of machinery in use.

Very often engines are located in different parts of the breaker to run a special piece of machinery, and sometimes a separate engine is used to run each set of jigs.

By the use of these different engines a great deal of work is taken away from the main breaker engine. However, it is better practice to operate everything in the breaker, with the exception of the jigs, by one engine.

A breaker engine must always be powerful enough to supply extra power in case it is necessary to put in improvements after the breaker has been in operation for some time.

The size of hoisting-engines can be very readily computed, but a breaker engine is generally selected by comparison with others. If a 125-horsepower engine is in use at a colliery preparing 1,500 tons of coal per day, and the new plant has coal of about the same grade, needs about the same amount of machinery to prepare the coal, and carries the same pressure of steam through the same length of pipes from boilers to engine, a good basis is at hand for making the selection.

Every breaker engine should be fitted up with a governor, so the speed of the engine may be regulated. It should also have a self-acting lubricator, one that can be set so that the cylinder can receive a sufficient quantity of the lubricant. The different journals of the engine should also be supplied with self-oiling cups, for in most breaker-engine rooms there

is more or less dust, and this, with the continual running of the engine, requires the journals to be well supplied with oil.

2751. Indicating Engines.—Some coal companies in the anthracite region pay much attention to the indicating of engines. Economy of steam is their prime motive, and to attain it the old style of slide-valve engine is giving place to those special designs which admit of a greater number of expansions than can be obtained with the ordinary slide-valve. Such valves are better adapted to breaker and fan engines, which run continuously, than to hoisting-engines, where there is a continual starting and stopping.

2752. Engine Foundations.—A great deal of attention is paid to the engine foundations at the present day. Almost without exception they are built of stone. The stone of which the foundations are constructed may be of any kind, so long as it is durable. Most mining properties have an abundance of conglomerate rock, which will answer very well for engine foundations.

In excavating, a good solid bottom is sought, and very often masonry is built on the bed-rock. The general practice is to build the foundation-bolts in the masonry.

Wooden templets are made at the shops where the engines are manufactured, and sent to the colliery. They are set up on some framing erected about the excavation. Some line on the templet is assumed in connection with the lines of the slope or shaft. The templet is leveled up and put in position by an experienced mechanic.

In finishing, the top of the foundation is made as nearly level as possible. After the bed-plate of the engine has been set in position, it is leveled up by introducing small iron wedges between the bed-plate and the top of the foundation. After the foundation-bolts have been securely drawn up, sulphur is used to fill up the small openings existing between the bed-plate of the engine and the top of the foundation, so as to give the engine a solid bearing throughout.

The height to which the foundations are brought up is

governed very often by the topography of the surface, but mostly by the amount of clearance needed by the drums, fly-wheels, and belt wheels that are in use, and also by the amount of stone necessary to insure absolute stability.

A distance of 8 to 12 inches is not too much space to allow between the edge of the bed-plate and the sides of the foundation.

DRAINAGE AND PUMPING MACHINERY.

2753. The pumping machinery used about an anthracite mine is for draining the mine, supplying the boilers with water, supplying the different washing apparatus in and about the breaker, or for use in case of fire.

In mine drainage, the water that can be caught by a water-level gangway, opening by drift or tunnel to the surface, is conveyed by gravity directly from the mine.

The water in a mine below water level is either pumped out by a pump located on the surface or in the mine, or it is hoisted by the winding-engines in a special car, known as the **water car.**

2754. There are two classes of pumps in common use in the anthracite region for draining mines—the *outside plunger-pumps* and the *inside steam-pumps.*

The first class of pumps is arranged on the surface directly over or in line with an opening called the **pump way,** down which the pump-rods and column pipes are carried into the mine. The class of outside pumps which meets with most favor at the present time in the anthracite region is the **bull-pump.**

Steam-pumps of almost all forms, sizes, and makes are to be found inside the mines throughout the anthracite region. The number of collieries at which no steam-pumps are used is comparatively small.

The inside steam-pumps are nearly all plunger-pumps, as they are more suitable for the strongly acidulated mine water than the ordinary piston pumps.

The Goyne, Jeanesville, Stockton, Allison, Worthington, Cameron, Knowles, and Laidlaw-Dunn-Gordon are some of

the steam-pumps most commonly used in the anthracite region.

At some of the mines, instead of using steam to operate the inside pumping machinery, compressed air or electricity is employed. Where this is done, the generating plants are erected on the surface at some convenient place near the mine opening.

2755. At collieries not provided with pumping machinery, the water is raised by the winding machinery in a water car.

At slope collieries this car generally consists of an old cylindrical boiler-shell provided with large flap-valves, and mounted on the bottom framing or truck of a mine-car. When coal is not being hoisted, the water car is run on the slope and the water raised. The valves are so arranged that when the car is lowered into the water the boiler is filled, and on reaching the surface it can be quickly emptied by means of a lever opening the valves.

At shaft collieries the water car is of special design, and is generally attached directly to the rope, the cage being detached during the operation of hoisting water. These water cars or tanks are also filled at the bottom of the shaft by a valve arrangement in the bottom of the car, and are emptied by an automatic arrangement at the surface. The pumps for outside purposes are similar to those mentioned in the list of steam-pumps for use inside the mine, but of a smaller pattern.

HEAD-FRAMES.

2756. Having decided upon the location for the hoisting-engine, the erection of the head-frame is begun, in case the opening is a shaft.

The head-frame is a support for the sheaves, or wheels, over which the winding-ropes are led from the drum, which is located at a short distance from the shaft. At some of the colleries in the anthracite region iron and steel head-frames are being erected. These are far superior to the

timber head-frames for shafts, on account of their durability and their indestructibility by fire.

There are places in the anthracite region where a steel or iron chute is used, in connection with a steel or iron head-frame, to convey the coal to the breaker, instead of conveying it by tracks over the surface.

2757. In the anthracite region there are three classes of head-frames in use :

1. The triangular form.
2. The square upright pattern, with or without inclined braces.
3. An upright frame, with inclined braces.

2758. Fig. 991 shows the construction of a triangular form of a timber head-frame which is largely used. In this figure are shown a side elevation and an end view taken directly in front of the upright post marked *a* in the side view.

In the construction of the above form of head-frame the location of the drum and of the shaft are known; the height of the head-frame is then decided upon, and is usually made from 30 to 50 feet. With direct-acting engines this height should be sufficient to allow a play of at least two-thirds of a revolution between the cage landing and the overwinding point.

2759. As shown in Fig. 992, S is the sheave and D the drum. The two forces $a\ D$ and $a'\ D$ act towards the drum, and two vertical forces act down the shaft approximately equal to the two forces acting towards the drum. There are, therefore, two resultants, $a\ b$ and $a'\ b'$, the directions of which are determined by lines from a and a' through the center of the sheave S.

This diagram shows that the structure of maximum stability will have a vertical limb parallel to the vertical forces, and an inclined limb approximately parallel to a line joining the centers S and D; but as it is not usually feasible to make $A\ S$ parallel to $S\ D$, the inclined limb is given less inclination.

Theoretically, the brace $A\ S$ should be in the direction of

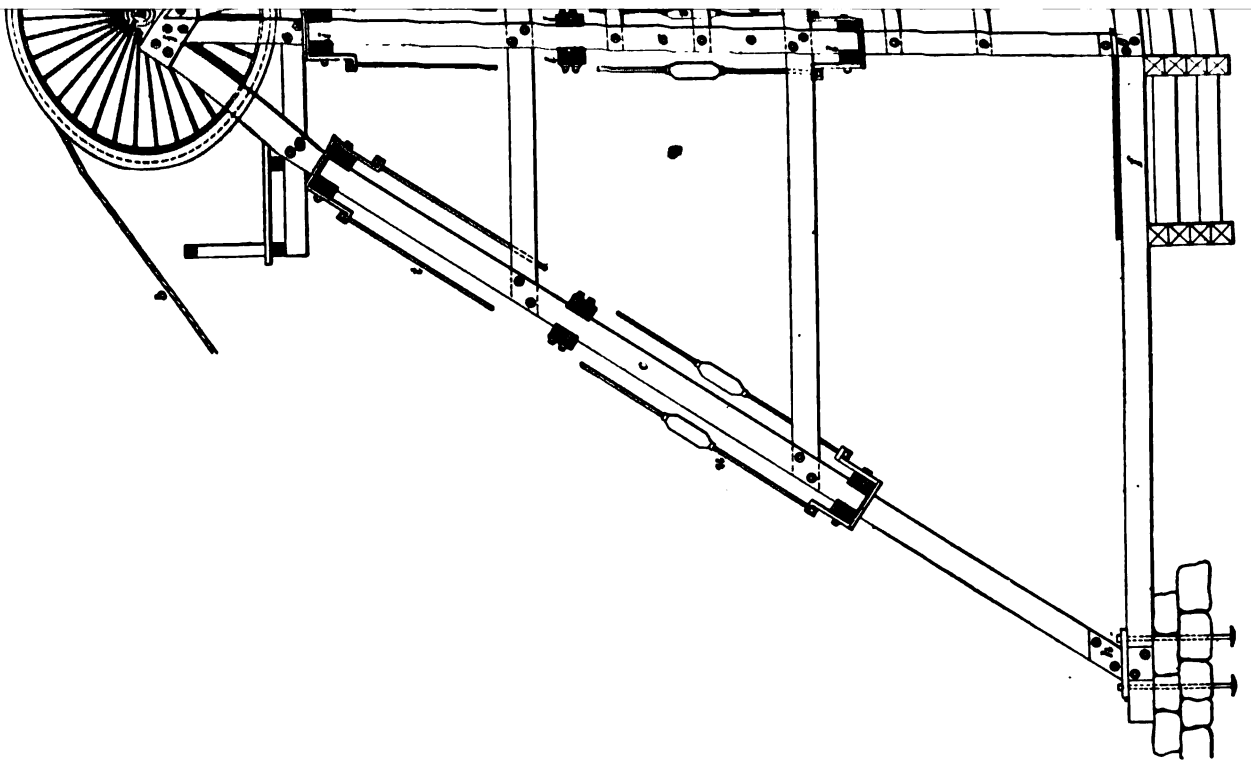

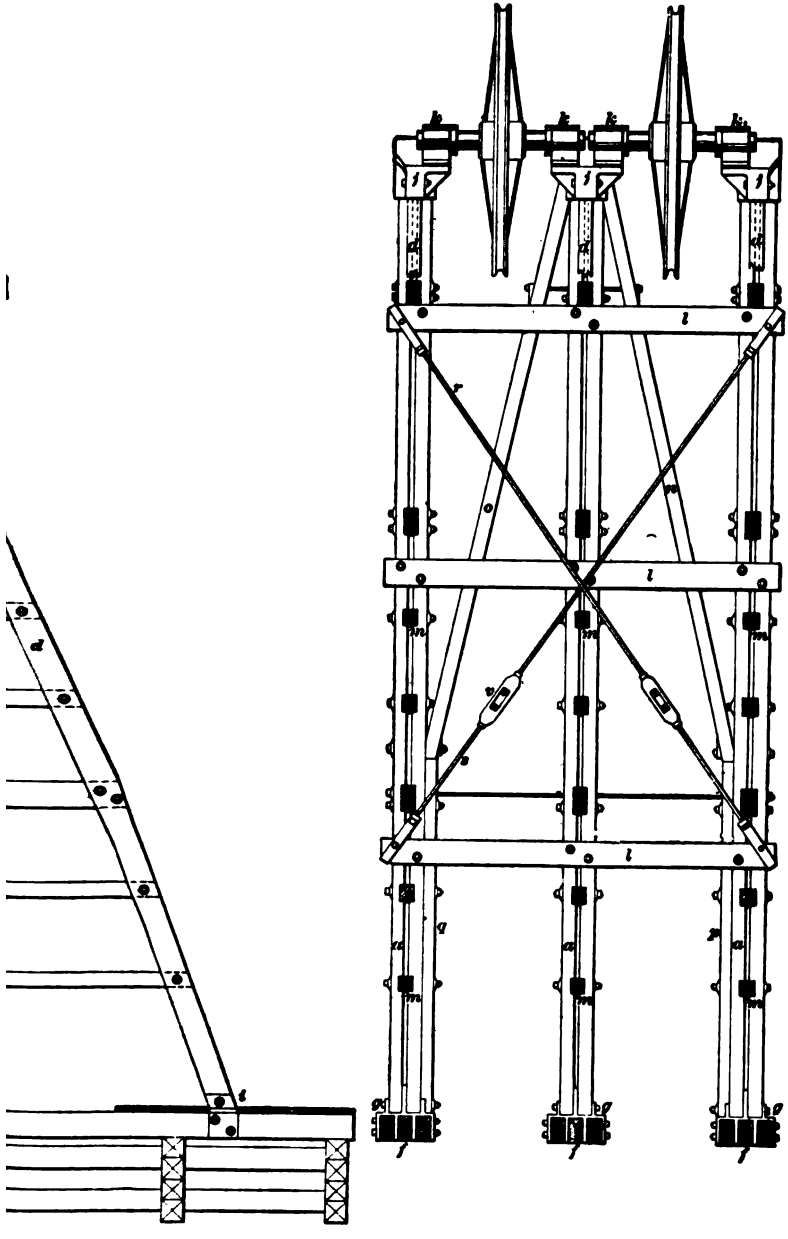

and parallel to the resultant, but at times the structure is subjected to variable strains in hoisting; consequently, the

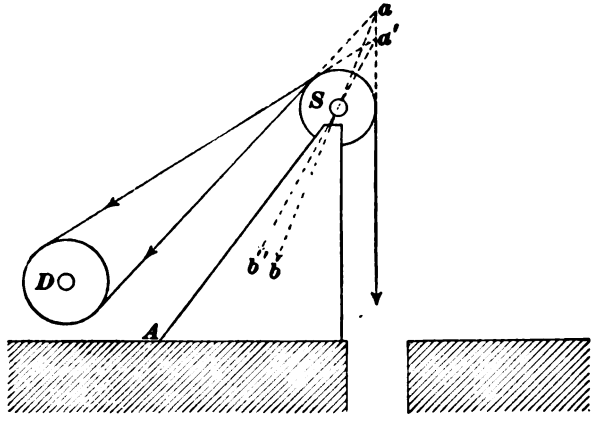

FIG. 992.

direction of the brace A S will be somewhere between the resultant and the line of the under-winding rope of the drum.

2760. Again referring to Fig. 991, the construction shows the head-frame to be made up of the posts *a*, which are parallel to the winding-rope *b* running down the shaft; the inclined brace *c*, which resists any thrust that would tend to rotate the head-frame; the inclined brace *d*, to which are secured the cross-timbers *m* that support the cage-guides *e*.

As shown in this figure, the sills *f* are made up of three pieces of timber 8 inches × 14 inches in cross-section. The posts *a* rest in cast-iron shoes *g*; the shoes, as shown, are firmly bolted to the posts and sills. The inclined braces *c* and *d* are fitted with cast-iron shoes *h* and *i*.

Where the post *a* and the two braces *c* and *d* unite at the top of the frame, they are held in place by the casting *j* which supports the pillow-block *k*.

The posts *a* and the brace *c* are made up of two pieces of timber 8 inches × 14 inches in cross-section. The brace *d* consists of one piece of timber 8 inches × 14 inches in cross-section. The transverse timbers *l*, which are used for

bracing, are two pieces of timber 6 inches × 14 inches in cross-section.

The timbers *m* supporting the guides are single pieces of timber 8 inches × 8 inches in cross-section.

The center post, as shown in the cross-section, is braced by the two pieces *n* and *o*, which are supported by the two timbers *p* and *q* bolted to the two outside upright posts. The upright posts *a* and the inclined brace *c* are further braced by the tie-rods *r*, *s*, *t*, and *u*, all of which are fitted with turnbuckles, as shown at *v*. The different posts are firmly bolted together, the bolts being fitted with cast-iron washers.

INCLINED PLANES.

2761. When the opening is a slope, and the breaker is placed in front of the slope mouth, the main structure is

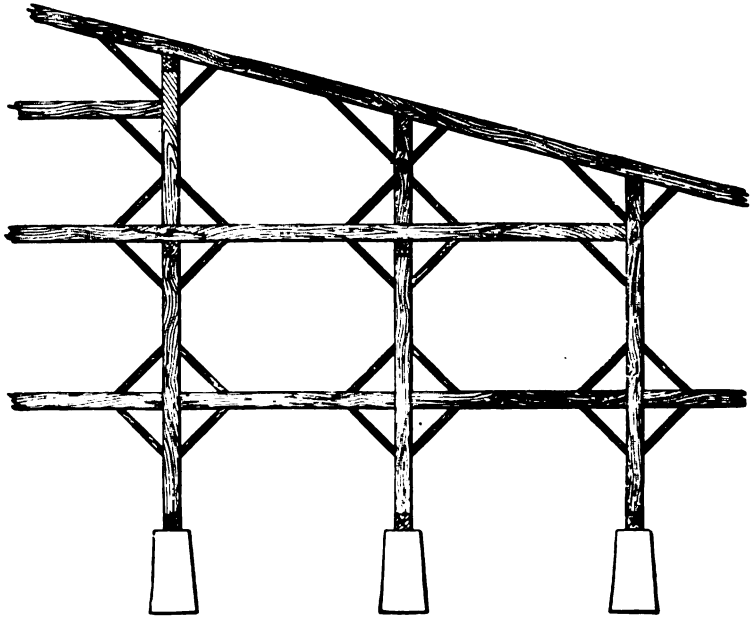

FIG. 993.

placed at some distance from the opening and is connected to it by an inclined plane, built as an open trestle and

forming a continuation of the slope. There are various methods used in framing these trestles, the particular form depending upon the height and the distance. Figs. 993,

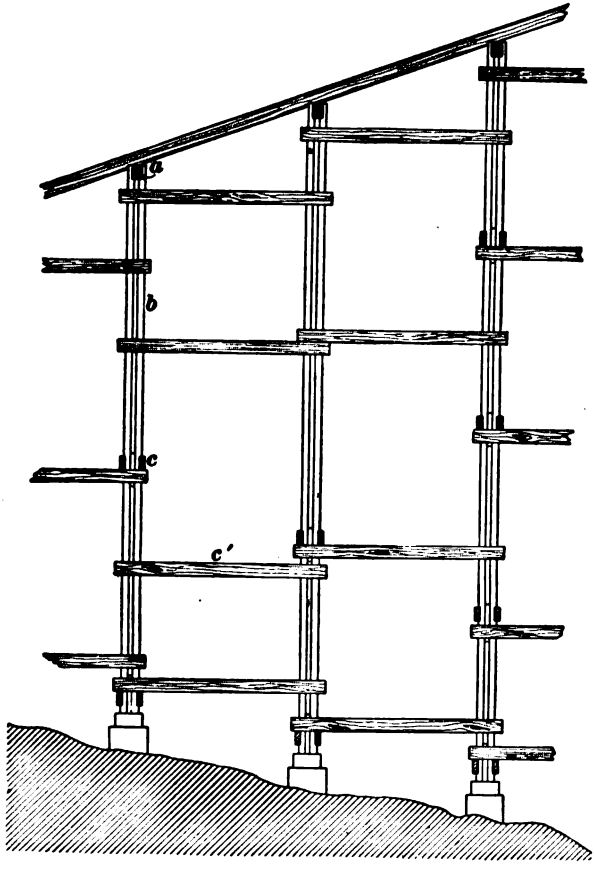

FIG. 994.

994, and 995 show the side elevation of some of the different forms for framing trestles used in building inclined planes in the anthracite region.

2762. The method of framing as shown in Fig. 993 requires very heavy timber, generally 12 inches × 14 inches

or 12 inches × 12 inches, with 5-inch × 6-inch braces. This method of framing makes a very substantial structure.

In Fig. 994 the timbering used is, *a*, 10 inches × 12 inches; *b*, 5 inches × 12 inches; *c* and *c'*, 5 inches × 10 inches. In this method the posts and the cross-beams are made up of two separate pieces of timber, the different parts being fastened together by bolts.

Fig. 995 shows a framing where **corbel blocks** *a*, *a'* are used. These give a greater bearing surface for the stringers, and, consequently, strengthen them. When the slope is

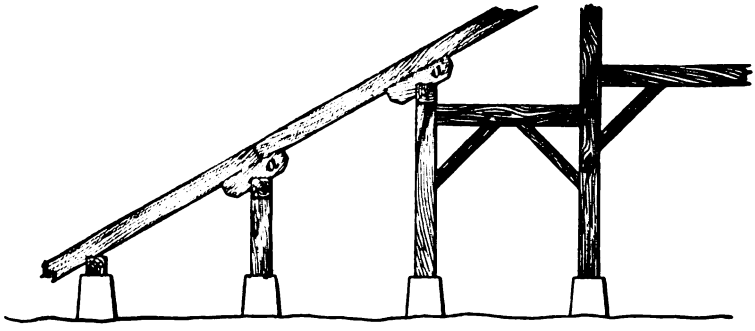

FIG. 995.

not on line with the breaker, there is what is called the **slope landing.** This consists of the tracks and turnouts laid on the ground at the mouth of the slope.

In some places, where it is necessary to get on higher ground to locate the turnouts, or where the cars can be run direct to the dump, some such arrangement as shown in Fig. 996 must be resorted to. This is simply a short inclined plane connected with a trestle.

2763. Safety Blocks.—Fig. 996 shows the arrangement of a safety block used at the head of slopes, in compliance with the Anthracite Mine Law. Such an arrangement of safety blocks is necessary at the head of every slope, to prevent the descent of mine-cars into the slope before the wire rope is attached. The amount of damage done by a single escaping car is often so great that the money required for repairs would pay for the adoption of an expensive

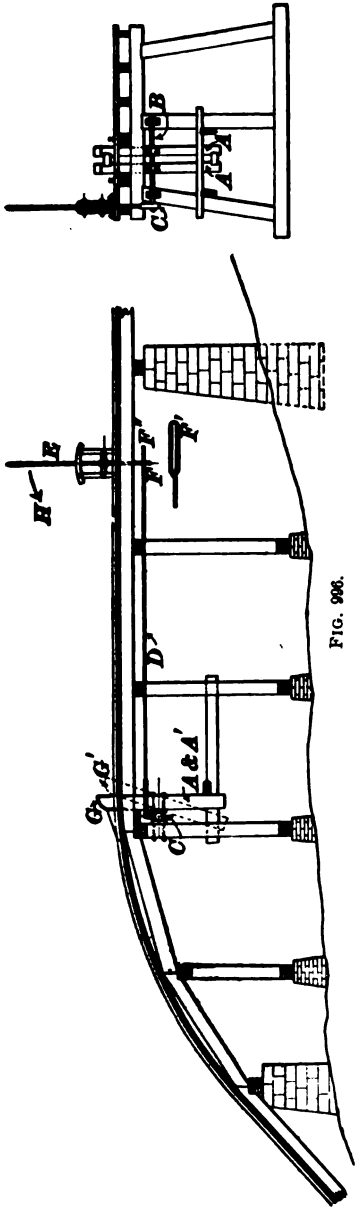

FIG. 996.

device for preventing such an accident. The block as arranged and shown in Fig. 996 is for a single-track slope. It is very simple, thoroughly reliable, and an inexpensive appliance.

This safety attachment consists essentially of the blocks A and A', the shaft B, the arm C, the rod D, and the lever E.

The pieces A and A' are generally made of 8-inch × 12-inch timber, and are iron-bound at the extremities to prevent wearing. The shaft B, to which is keyed the arm C, is 2 inches to $2\frac{1}{2}$ inches in diameter, and the parts A and A' are securely fastened to it. D is a rod connecting the arm C with the lever F. The rod D, where it unites with the lever E at F, is made as shown at F', in a sort of a loop. The car, as it comes over the knuckle, finds the blocks A and A' in the position G, and the rod D in the position F. The axle of the car strikes the block and changes the position from G to G', and the rod D is changed from F to F'', on account of the loop shown at F'; hence, during this operation the lever E remains stationary.

After the car or cars have passed over the block, it resumes its vertical position, due to the

position of the shaft *B*. If it is found that the blocks do not resume their vertical position promptly, a weight can be attached.

When the cars are about to descend the slope, after the rope is attached, the man in charge of the lever *E* pushes it forward in direction *H*, thus bringing the block into position *G'*. This is a style of block that seldom gets out of order, and is simple and strong in its construction.

The above block is one of the many kinds in use in the anthracite region. The style generally depends upon the place where it is to be located.

FANS.

2764. There is no definite location on the surface for a fan in connection with the outside arrangements that helps to operate the plant. The location depends altogether on the arrangement of the underground openings.

Where a new plant is opened up by means of two slopes, which are termed the "main" and "tender" slopes, it is customary to place the fan between the two.

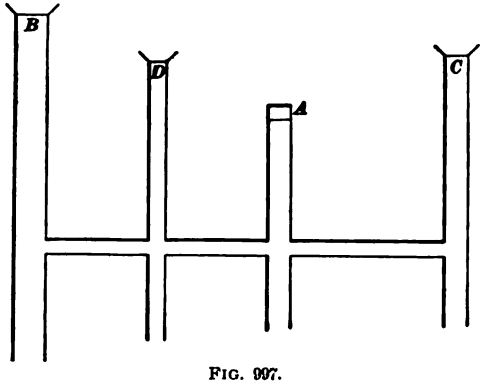

FIG. 997.

Fig. 997 shows the plan of opening up a plant by means of two slopes, the tender slope *C* and the main slope *B*. *A* is the shaft on which the fan operates, *D* being the pump way. In this method of opening, the tender slope *C* is driven downwards from the surface, while the openings *A*, *D*, and *B* are opened from below upwards.

In very deep shafts there is generally a fan compartment. In most cases, however, there is a special opening made

for the fan, either by sinking a shaft or driving a passage to the outcrop of the vein.

2765. Since the passage of the Anthracite Mine Law prohibiting the use of furnaces in gaseous mines, centrifugal fans have come into general use.

The centrifugal ventilating fan is a machine which is composed of a number of straight or curved vanes mounted on a shaft, to which a rotary motion is given. The air drawn from the mine enters the apparatus by an opening around the axis. It then comes in contact with the vanes, which communicate their motion to it, and under the action of the centrifugal force it is driven to the circumference and from there into the outer atmosphere.

Ventilating machines used at the anthracite mines act, in general, either as **exhausting machines,** placed at the top of the upcast shaft, or as **blowing-machines,** placed at the top of the downcast shaft. The exhausting machines draw in the air through a short or long channel and eject it into the atmosphere; blowing-machines, on the contrary, take the air from the atmosphere and force it into the mine openings.

2766. In the anthracite region there are various types of fans in use, but the one known as the Guibal fan is used more extensively than all others.

The most important and distinguishing feature of the Guibal fan is the spiral or circular housing. In this the fan differs from all others (except the Capell and the Schiele). The Guibal delivers all its air through one opening.

This opening is regulated by an adjustable shutter. The theory of the shutter is here briefly stated: The air is delivered at the throat at a velocity nearly equal to the ends of the vanes, and a certain known volume of air is delivered by the fan every minute. If the outlet is too small, the air does not find free exit; if too large, reentries of air occur behind each blade. The shutter provides a means of so regulating the size of the orifice that it is just sufficiently large to give free exit to the required quantity.

2767. The diameters of fans used in the anthracite region vary from 10 feet to 35 feet. From recent experiments, it has been found:

1. The only advantages obtained by increasing the diameter of fans are: Less speed is required from the engine if it works direct on the fan shaft, a proportional extra width is obtained, and there is a larger area for the air to flow through into the fan.

2. The width of fans appears to exert but small influence on their efficiency, but, as a rule, an increase in width enables a fan to exhaust more air.

3. The influence of the shape of the spiral casing is considerable. The best shape begins to curve away at or near the cut-off, and gradually increases the space between the blades and the casing until the outlet is reached. At this point it should be from one-fourth to one-third the diameter of the fan.

4. The influence of the shutter is decidedly advantageous, as by its use the opening at the end of the spiral casing is so regulated as to give the highest efficiency of the fan.

5. The tests show that fans give the best results when running at a peripheral speed of 5,000 to 6,000 feet per minute.

2768. In the anthracite region there are more different types of engines running fans than any other kind of machinery about the colliery. At the same colliery there often are horizontal, vertical, inclined, and oscillating engines running different fans.

Too much importance can not be placed upon the selection of a fan-engine for a large, gaseous colliery. A breakdown at any time may cause the loss of many lives, and result in great damage to the mines. It is, therefore, of great importance to have an engine that will run regularly and with little risk of breakage.

When the fan is located directly over the airway, it is subject to more danger from fire than when located a few feet away from the shaft mouth; but, even when fans are

not placed directly over the upcast, they are placed so near to it that the risk of damage by fire is almost as great.

To guard as much as possible against loss in case of fire, the fan enclosures should be built either of iron or brick, instead of wood.

ARRANGEMENT OF SOME OF THE BUILDINGS AND OTHER NECESSARY EQUIPMENTS.

2769. Engine-Houses.—Most of the engine-houses erected in the anthracite region are frame structures, with either shingle or corrugated-iron roofs; in many cases the sides also are of corrugated iron. At some collieries, where there are expensive winding-engines, the engine-houses are of brick or stone. Iron, stone, and brick are used in construction, to guard as much as possible against fire. The sides and roofs of frame and iron structures are coated with red mineral paint.

The different structures are all well lighted, heated, and ventilated, the ventilator being an opening in the roof fitted with small windows that can be opened. The engine-houses are generally heated by a few coils of steam-pipe, in connection with the steam fixtures that they always contain.

In constructing an engine-house, at least 5 feet should be allowed between the engine bed-plate and the sides of the building, and at least the same distance between the steam-cylinder and the end of the building. At the drum end of the building there should be a space between the end of the building and the drum fixtures, at least wide enough so that a man can cross from one side of the building to the other.

2770. Carpenter and Blacksmith Shops.—The carpenter and blacksmith shops should be located under one cover. This has always been found to be the better way in practice, for the one in many cases really depends upon the other. The building should be located in some place convenient to the main opening, so that it is not necessary to construct a great length of track to convey the cars from the shaft or slope to the shop for repairs.

The size of the structure depends upon the amount of work to be done. Very often larger shops are built at small plants than at some larger ones. This is because the mine-cars in the latter case are built at some other car shops, and all the heavy ironwork is also done away from the colliery blacksmith shop. When this is the case, the shops are erected merely for repair work, such as sharpening the miners' tools, repairing mine-cars, and any other work that may be needed about the colliery. At some collieries, where they build their own mine-cars and do their own heavy iron-work, very commodious structures are erected, which are fitted with the best class of machinery, so that the work can be turned out with neatness and despatch. Such shops are well lighted and ventilated, and the carpenter shop is built with a pit, so that men can work beneath the car.

In connection with the blacksmith and carpenter shops, some of the collieries have a well-equipped machine-shop in operation to do the necessary repair work about the colliery.

2771. Powder House.—This is the building wherein all the blasting material used about a colliery is stored. It is generally located in some out-of-the-way place (that is, separated from the other buildings), so as to avoid as much as possible the danger of explosion in case of fire; at the same time, it is so located as to be convenient for the miners.

The building is generally a frame structure, with a corrugated-iron roof. At some collieries in the anthracite region very substantial iron, brick, or stone structures are erected. The size of the structure depends upon the size of the plant. Very often a colliery is so located that it can be furnished with a new supply of explosives at very short notice, in which case a large stock need not be kept on hand.

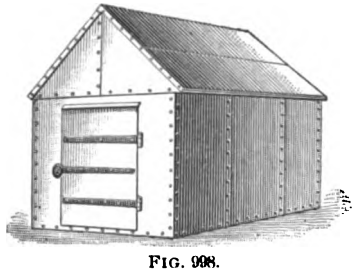

FIG. 998.

Fig. 998 shows a powder house constructed of angle-iron and covered with No. 20 plain

painted iron. It is made in sections, so as to be portable, and can be fastened to any wood or stone floor, holes being made in the angle-iron for this purpose.

2772. Supply House.—This is the building wherein are stored the oil, cotton, shovels, and other articles used about the colliery. It is located, in some cases, very near the main opening, so as to be convenient for the miners; at other times it is located near the main railroad-track, for convenience in unloading barrels of oil when they are shipped direct to the colliery. This building is generally a frame structure.

There is another supply house at most collieries that is referred to as the **iron house,** which is located close to the blacksmith shop, as shown at *q*, Fig. 986. This building is a frame structure, usually 12 feet × 24 feet, and is used for storing bar iron, tool steel, bolts, etc.

2773. Office.—This is one of the necessary structures for a colliery. The office is generally divided into two compartments, one being occupied by the superintendent and the other by the colliery clerk and the shipper. At some collieries, where the engineering corps are stationed *at the mines*, they occupy a compartment in the superintendent's office. It is not customary at the present time for the colliery clerk to be stationed at the colliery. The larger mining companies generally have an office, located in a town or city near by, where the colliery accounts are made out and kept. The shipping-clerk, generally known as the **shipper,** then attends to everything pertaining to clerical duties about the colliery, and frequently he has an office all to himself. This office is usually a frame or brick structure located near the railroad shipping tracks, so that the shipper from his window in the office can keep a record of the loaded cars that are sent to market.

At many of the gaseous collieries there is a compartment in the superintendent's office in which there is a machine known as the **Shaw gas tester,** which is used to test the

air from the mine for the percentage of gas it contains. The air to be tested is brought out of the mine in rubber bags.

2774. Lamp House.—At many of the large gassy mines there is a frame building near the main opening known as the lamp house. Here the safety-lamps, are given to and received from workers in the mine by a man known as the **lamp man,** whose duty is to inspect, clean, repair, and keep a record of the different safety-lamps that are used in the mine. In mines where there is but a small quantity of gas the work of the lamp man is performed by the **fire boss** at some convenient place.

2775. Wash House.—This is a suitable structure upon the surface, as required by the Anthracite Mine Law, wherein the men employed in the mine can change their clothing before entering the mine, and can wash themselves and change their clothing upon returning therefrom. The structure is generally a frame one, and is located so as to be convenient to the principal entrance to the mine. The building is well lighted and heated, and is supplied with pure cold and warm water.

2776. Timber and Lumber Yards.—In the timber-yard the mine timber is sized preparatory to loading it into mine-cars or upon mine trucks. It is here, also, where the rails, sills, planks, boards, lagging, timber, etc., are stocked that are to be used in the mine. This yard is usually near the main opening, although at collieries where most of this material is received by rail, and there is a convenient place for unloading it, the yard is near the railroad-tracks. Then, there must be a track leading from the main opening to the timber-yard.

The loading track in a timber-yard should have a platform built on one or both sides of it high enough to bring the level of the platform a little above the height of the timber truck, so that there need be no unnecessary lifting

or rolling of the heavy timbers to get them upon the mine trucks. The lighter lumber to be used in the carpenter shop for building mine-cars or repair work is either cut at the colliery sawmill or received by rail. It is generally stored under small sheds near the carpenter shop, in a yard spoken of as the **lumber-yard.**

2777. Barn.—This structure is generally erected at some distance from the others, so as to be out of the way in case of fire. It is a two-story frame building. The first story, or ground floor, is used for stabling purposes, and contains the different stalls for the mules and horses used about the colliery. In the second story the large storage bins for the grain are located. The hay and straw used are also kept on this floor.

At some collieries most of the mules used underground are kept in underground stables, on account of the great inconvenience in bringing them to the surface. In such cases they are never brought to the surface until death overtakes them, or in case of a long suspension of mining operations.

At some collieries, where a large number of mules are used underground, the barn on the surface is made sufficiently large to accommodate them all in case of suspension. At other collieries the barn is made just large enough to accommodate the mules and horses that are used outside and those that have daily exit from the mine. In such cases, when there is a suspension of work underground, the stock is sent to some neighboring place for shelter.

The barn in Fig. 986 shows an ideal location. The second-story floor is just low enough to allow a truck to be used in conveying the grain from the car to the barn. A barn should be well lighted, and so constructed as to be at all times well drained. A dam should be built near the barn, to which the mules, as they come from the mines, can be driven and washed. If the mine dirt is allowed to accumulate on the mules, it will cripple them and, in time, make them unfit for service.

CULM, OR DIRT, OR WASTE AND ROCK BANKS.

2778. A suitable location for the culm, or dirt, or waste and rock banks is very often a difficult matter to decide upon. In determining the location of the rock and culm dumps, the topography of the surrounding area exercises a governing influence. It is always advisable to avoid depositing this refuse over the outcrop of a workable seam, for when these heaps catch fire there is more or less danger of the fire extending from the outcrop coal into the mine. It is also advisable to clear away all old logs, stumps, and other vegetable matter before dumping culm on a piece of land, as decaying vegetable matter in a culm pile will start a fire by "spontaneous combustion."

2779. At the present time waste may be divided into two classes: waste coming from *dry* breakers and waste coming from *wet* breakers. In the first case, the coal as it comes from the mines is in a more or less dry condition; in the second case, the coal as it comes from the mines is in a more or less wet and muddy condition.

In the first case there are separate rock, slate, and culm banks, or a combination of rock, slate, and culm; or, rock and slate bank, with a separate culm bank; or, slate and culm, with a separate rock bank.

In the second case, where the coal is wet and muddy as it comes from the mine, there are separate rock, slate, and culm, and slush banks; or, a combination of rock, slate, and culm, and slush; or, a combination of slush, slate, and culm, with a separate rock bank; or, a combination of slate and culm, with a separate rock and a separate slush bank; or, what is most general, a combination of rock, slate, and culm, and a separate slush bank.

2780. Previous to the last fifteen or eighteen years, the culm, or coal dirt, the slate, and bony coal picked from the coal in the breaker and the slate and rock coming from the mine were all deposited together in one heap; but the possible utilization of the culm or fine coal, either by burn-

ing in fire-boxes constructed for this purpose or by manufacturing into artificial fuel, has given to the culm as it lies in the banks a certain prospective value, and, to enhance this value and reduce the future cost of utilizing this refuse, two or three distinct kinds of refuse heaps are now common.

These old culm banks that are separated from the rock and slate banks, and which were deposited years ago when everything below the size of stove coal was called culm, are being used at the present day to operate what are termed **coal washeries.**

2781. In the first case referred to above, the coal during the separating and sizing in the breaker is kept dry.

The fine coal known as culm, coal dirt, waste, etc., that passes through the rice-screen mesh (or, when no rice coal is made, through the buckwheat-screen mesh, or when no buckwheat is made, through the pea-screen mesh), together with all the fine stuff made from the bars that are located directly under the main screens, is collected in a pocket or separate pockets and deposited in a heap known as the culm bank or dirt bank.

The rock and slate coming from the mine are carried directly to a heap known as the rock bank.

The slate picked from the coal in the breaker, after being collected in pockets in the breaker, is dumped on the slate bank, or, as stated before, is dumped with the rock or dirt.

The bony coal is sometimes collected in a pocket and dumped on the same bank as the slate, but generally it is crushed in an extra set of rolls called the **bony-coal rolls,** and made into the smaller sizes of coal.

2782. In the second case, the separating and sizing are performed by means of water. The coal is washed, and the culm coming from the rice-screen mesh, or buckwheat-screen mesh, or pea-screen mesh, as the case may be, is carried off by the water through troughs, and is deposited over an area known as the **slush bank.**

After the water leaves the trough, the heavier particles are

deposited first, and during the continuance of its flow it holds nothing but the finest sediment in suspension.

In order to take out as much sediment as possible before the water reaches the streams that drain the region, very cheap dams are constructed, called **brush dams.** These dams are made, as shown in Fig. 999, by piling logs, brush, etc., together and throwing earth back of them.

A number of troughs are used for overflows. The water accumulates in the dams, the sediment is deposited, and the water passes off comparatively free from sediment. At

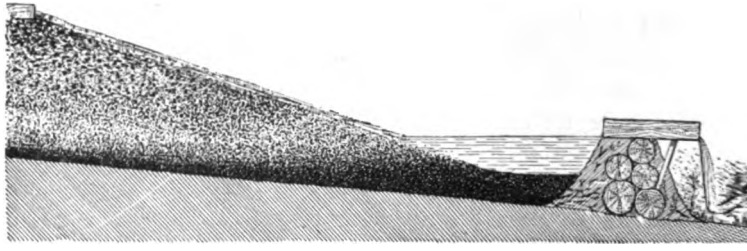

FIG. 999.

some collieries no attention is paid to the removal of the sediment from the water; consequently, the streams are quickly clogged up, and a thick deposit covers the lower portions of the valley, giving rise to suits for damages.

As in the first case, the rock and slate that come from the mine are carried directly to a heap known as the rock bank.

The slate from the breaker and the fine culm that drops through the bars located directly under the main screens are conveyed to a pocket or pockets and dumped on the

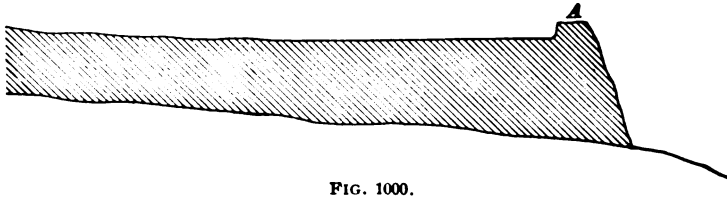

FIG. 1000.

slate bank; or, as before stated, the rock, slate, and culm are deposited on the same bank.

Fig. 1000 shows another arrangement of a slush bank, and how it is arranged to keep the deposit from getting into the stream. The slush as it comes from the trough is allowed to spread over a large area. Men are kept at work banking the deposit, as shown at *A*. The water either soaks through or is led off on the side of the deposit.

2783. At some collieries, where water is used in the breaker, there is not sufficient area on the surface for the slush banks already described. If no deposit is to reach any of the near-by streams, a machine is used, the end view of which is shown in Fig. 1001. It is simply a large tank, into

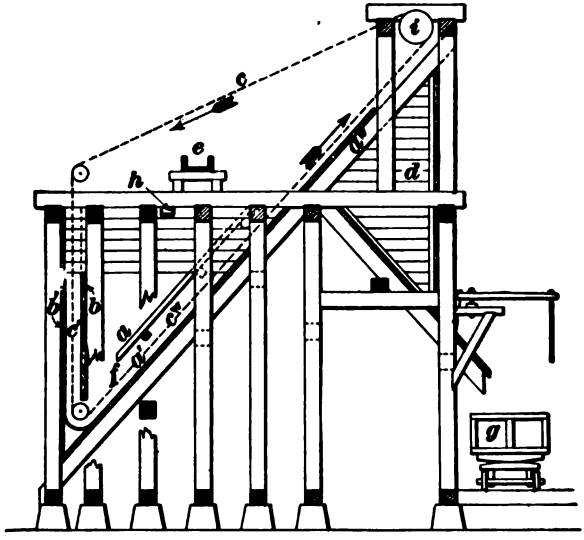

FIG. 1001.

which the water containing the culm is run as it comes from the breaker.

The tank is fitted with two bottoms, *a* and *a'*; *a* is termed the false bottom. It also has two sides, *b* and *b'*. *c*, *c'*, and *c''* is a line of drags, which are from 3 to 4 feet wide. In one tank there are from four to six of these drags, all working by means of shaft *i*; *d* is a pocket into which the culm is deposited as it is taken by the drags from the settling tank.

The operation of this may be explained thus: The water, as it comes from the breaker through the trough *e*, is deflected at intermediate points into the tank. The water in the tank is but very little agitated by the drags, which are kept going continually in the direction of the arrows. The agitation is but slight, because of the false bottom in the tank. The particles, as they settle, drop into the drag line at *f* and are conveyed to *a''*, where they drop into the pocket *d*, from which they are loaded into a dumper *g* and conveyed to the culm bank. The idea of extending the bottom *a'* to *a''* is to drain off the water, so that it will not be carried into the pocket *d*. The water, as it leaves the tank through the overflow *h*, still contains the finest sediment. To remove this sediment from the water before allowing it to run into the streams, it is conveyed to large settling tanks, where it is allowed to settle. The very finest particles settle to the bottom, after which the water passes out through the overflow.

2784. Various methods are in use for conveying the culm and waste from the breaker to the culm and waste banks.

At slope collieries, opened on the edge of the basin, the ground generally falls away rapidly enough to gain ample dumping space within a short distance. In such cases the culm is collected in pockets located in the lower part of the breaker. Tracks are laid along the side-hill for a short distance from the breaker to a point where the dump is commenced. In almost every case, in such a location, it is found necessary to erect a short trestle to cross the empty and loaded railroad-tracks leading to the breaker.

By examining Fig. 986, it can be seen that in this location the ground falls away very rapidly, and a short trestle *c''* is erected over the railroad-tracks.

At shaft collieries, and at slope openings on comparatively low ground, dumping height is obtained either by an inclined plane, usually known as a dirt plane, by erecting a system of conveyors, as shown in Fig. 1002, or by erecting a tower

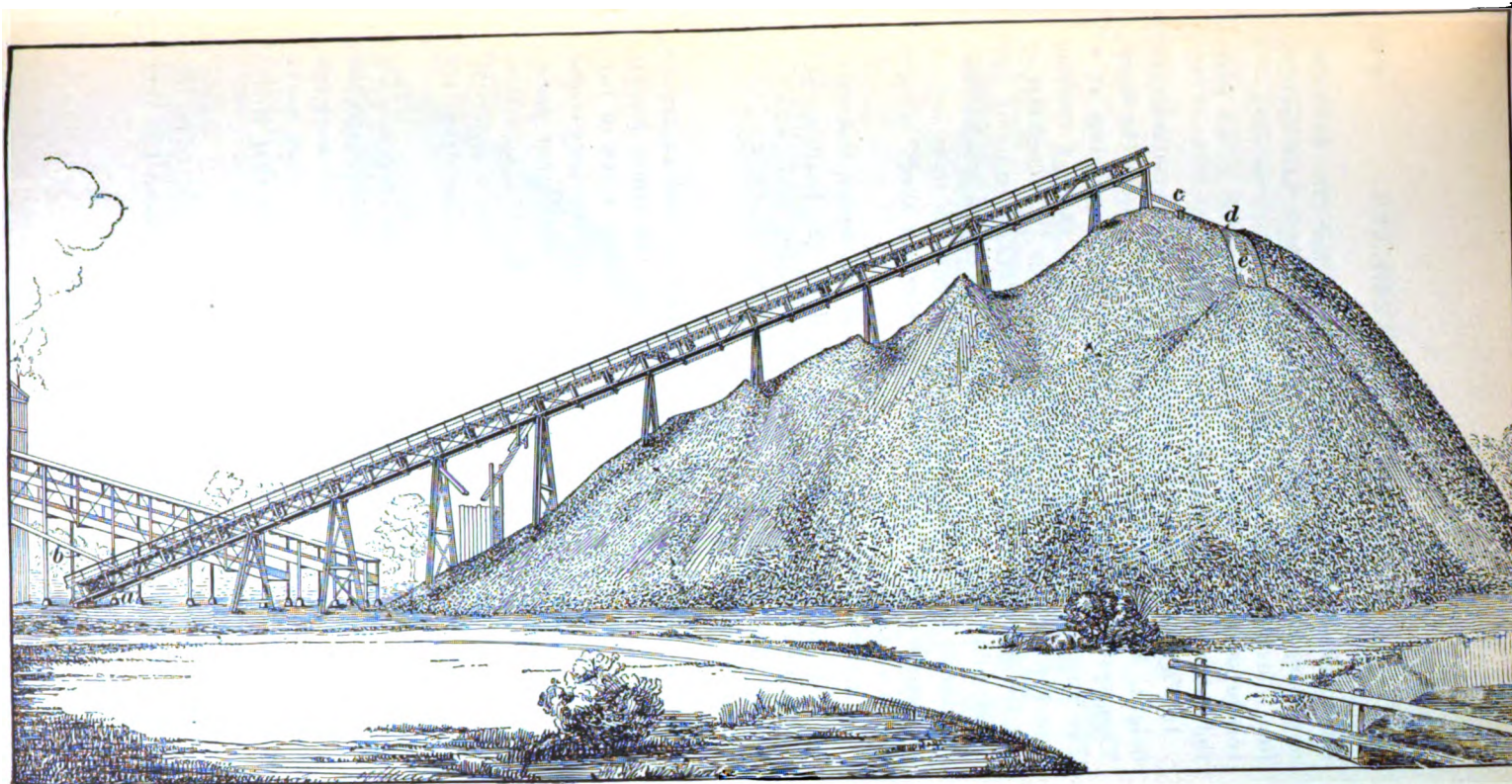

FIG. 1002.

in connection with the breaker. In this last case the culm, or waste, is elevated to a considerable height and emptied into a large pocket that will hold from 18 to 20 tons. A trestle is built in connection with the tower, so as to make the culm pile some distance from the breaker.

In Fig. 1002 the conveyor shown is built to a considerable height, and discharges its product directly upon the heap. This system of conveyors is driven by the gearing at *a*. The waste is fed into the conveyor by a chute *b* coming from the breaker. The culm, or waste, as it comes out at the top, passes down the chute *c* and is "spread out" by the circular sheet iron *d*. In time it becomes blocked up, directly in front of the chute *c*. The culm is then led off on the sides of the heap by the circular sheet of iron shown at *d*.

At many of the collieries the line of conveyors, instead of discharging their product directly upon the heap, as just shown, discharge their product into a pocket, from which it is loaded into dump-cars and conveyed to the dump either by mules or by a small locomotive.

2785. At several of the collieries in the anthracite region where the above method is in use, the chute leading from the conveyor to the waste pocket has a set of bars which takes out all the fine stuff, and only the very coarse material reaches the pocket. The fine stuff that passes between the bars is conveyed by a chute to a bore-hole, through which it is washed into the mine, where it fills up the old workings and acts as an aid to the pillars that are left intact to support the surface.

At many of the collieries, especially where there are flat workings, large pieces of rock are never brought to the surface, but are stowed away in the abandoned workings underground. When this is done there are no rock banks on the surface, which gives an additional area that is frequently very desirable.

2786. Another system of removing culm from the breaker has of late years come into use where but very

little or no water is used in the preparation of the coal. This system is known as the **culm blower.** The arrangement is exceedingly simple and is a convenient one.

The waste is all collected in a pocket at the bottom of the breaker, and is fed through a hopper *A*, as shown in Fig.

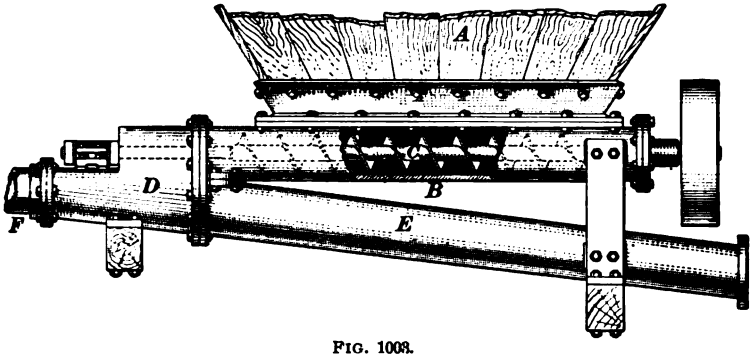

FIG. 1003.

1003, into a cast-iron casing *B* containing a worm *C*. This worm *C* feeds the waste into a chamber *D*, where it is met

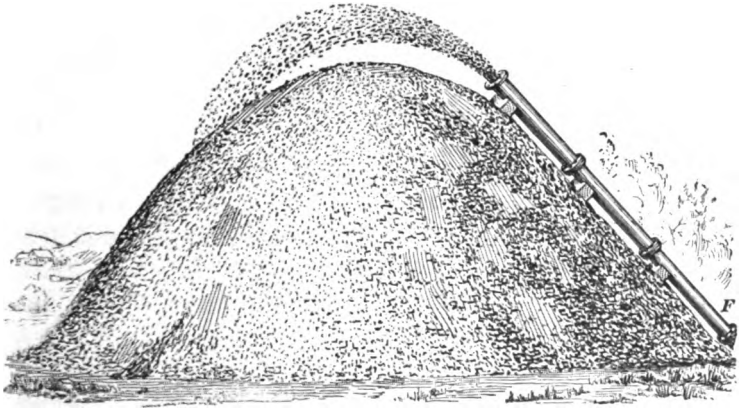

FIG. 1004.

by a blast of air from the pipe *E* and carried through the column *F* to the culm heap, as shown in Fig. 1004.

2787. The pipe *E* is connected with an improved positive-pressure blower, whose inside arrangement is shown in

Fig. 1005. It consists of the two rotating bodies, or pistons, *a* and *b* keyed to parallel shafts *c* and *d*, which rotate in opposite directions with equal velocity. The form of the pistons is such that they touch each other like toothed wheels, and are enclosed in the casing *e*, which fits them as closely as practicable. From this figure, it is readily seen how the air between the pistons and casing is forced through the opening *f* into the air-pipe *E*, shown in Fig. 1003, while fresh air continually enters the casing through the suction opening *g*. In this machine *each* piston forces the air out of the space *V* twice during every revolution, so that the theoretical discharge per minute is $Q = 4\ n\ V$, where *n* represents the number of revolutions per minute of the machine,

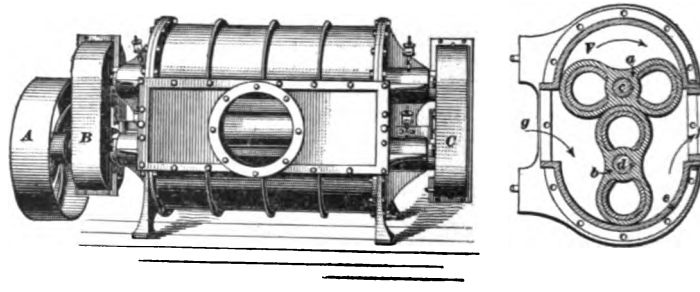

FIG. 1005.

that is, of each of the two pistons. The piston shafts are driven by the belt-pulley *A*, and the cog gearing in the cases *B* and *C* cause the motion of one piston shaft to be transmitted to the other. These blowers are usually run at a speed of 200 to 250 revolutions per minute; in consequence of these high velocities, they are subjected to considerable vibration and work with a great deal of noise, to overcome which the cog gearing is run in oil, which is contained in the casings.

There is very little friction in the column *F*, Fig. 1004, and, consequently, comparatively no wear in the pipes, for the waste flows through the center of the orifice with a cushion of air all around it. The culm can be deposited at any place, simply by turning the mouth of the pipe in the direction in which the culm is to be deposited.

2788. The use of this blowing arrangement does away with the mules and small locomotives that are employed in all the other methods described, with the exception of the slush bank and the method of conveyors, as shown in Fig. 1002. At some collieries, where an inclined plane is used to do away with a number of mules or a locomotive, the dump-cars are hoisted up the plane, from which there is a descending grade to the dump.

To return the empty dump-cars to be loaded, a mule is used to pull them a short distance to a graded track cut in the side of the bank, leading to the foot of the plane or place where the dump-cars are to be reloaded.

2789. In locating a dirt plane, two cases have to be considered:

1. Whether it is better to use a **gunboat,** which is simply a large car that will contain two or three times the quantity that an ordinary dump-car contains; or,

2. Whether it is better to employ dump-cars on the plane where they are landed, either by using a barney or a chain with a hook or clevis attached.

Where a gunboat is used, a large pocket is built at the head of the plane, into which the gunboat empties. The gunboat is never detached from its rope upon arriving at the head of the plane.

2790. When the culm is handled as shown in Fig. 1006, which is a plan and elevation of a single dirt plane, a barney *M* is used. A barney is simply a small truck very solidly built, used to push the mine-car up an inclined plane or slope. In this case it pushes the dump-car *A* up the inclined plane *P*.

At the foot of this plane *P* is a small opening *N*, known as the **barney pit,** into which the barney *M* runs to allow the dump-car *A* to run over it in passing to the culm or waste pocket, the pocket for the culm being located at some dis tance from the foot of the plane.

This figure shows the arrangement and location of the sheave wheels at the head of the plane which lead the rope

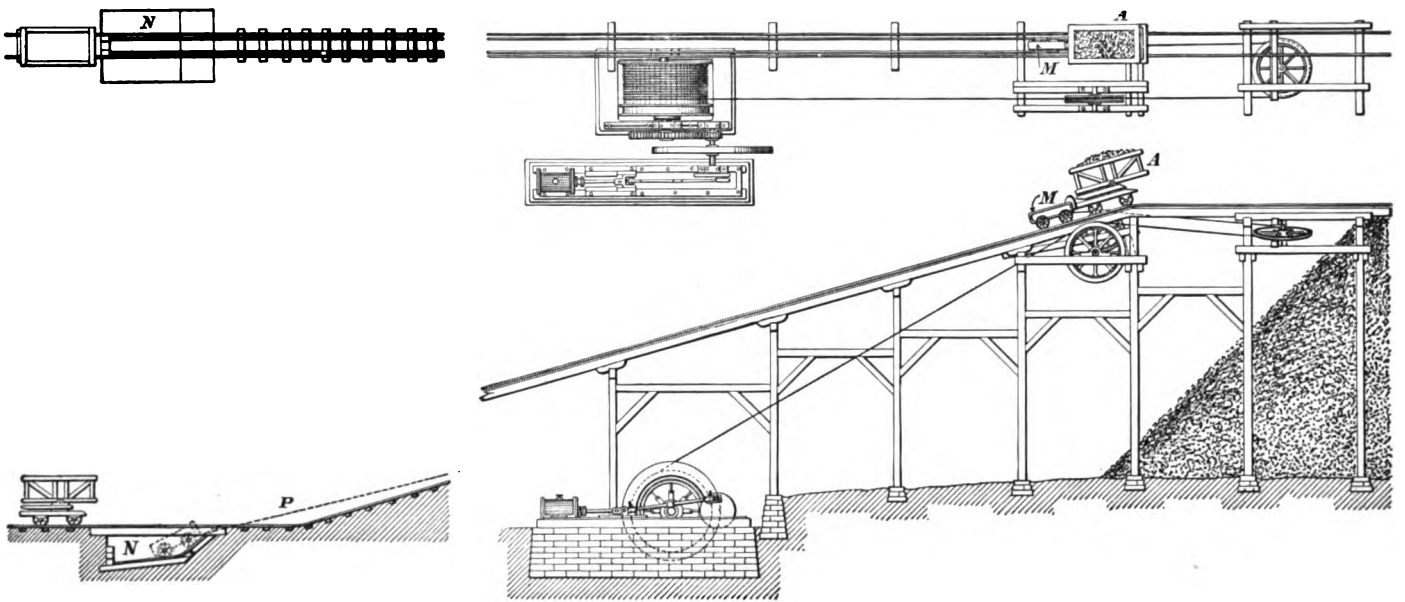

FIG. 1006.

to and from the haulage engine that is located at some distance from the culm heap, as shown.

The dump-car *A*, in coming down the inclined plane *P*, acquires enough momentum to carry it (after the barney *M* enters the barney pit *N*) up a slightly ascending grade on the empty track leading to the pocket, where it is again loaded with culm or waste. In returning, it comes in contact with a spring switch that transfers it to the loaded track, which is on a descending grade to the foot of plane *P*. On the arrival of the dump-car at the foot of the plane, the barney comes out of the pit and pushes the dump-car up the plane. The dump-car, being free from the hoisting rope, is landed very nicely and allowed to run to the loaded turnout, from which it is conveyed to the dump either by mules or a small locomotive.

2791. On a plane where the dump-cars are hoisted by using either a hook or clevis attachment for fastening the rope to it, the chain at the foot of the plane either remains attached to or is detached from the dump-car.

In case of either gunboat or dump-car, the foot of the plane should, if possible, be so arranged that the gunboat or dump-car can be run directly to the pocket for loading, without detaching.

The plane should also be so located, if possible, as not to face the main structure or any other important building that might be injured by the gunboat or dump-car breaking loose from the rope.

The engine for a dirt plane is sometimes located on the waste heap directly under the head of the plane, the bedplate of the engine being set upon a timber frame resting upon a timber cribbing. This is very poor practice, for in many cases the bank on which the engine is located takes fire, causing a continual settling of the crib, and making it impossible to keep the engine in proper running order.

It is always better for the engine to have some such position as shown in the figure, where it can have a good solid foundation, even if it does require an extra length of rope and some extra sheave wheels.

2792. The waste heaps often become of such dimensions as to encroach upon the immediate surroundings, making a very perplexing problem to overcome.

When the site is first selected for the waste, it should be in a location that will not interfere with the enlargement of the colliery plant, in so far as the erection of buildings is concerned; hence, buildings connected with a colliery should not be located so as to interfere with the growth of the waste banks.

At many collieries there is an ideal location for waste heaps, but at the same time this location may contain the outcrops of all the workable seams. It is better to sacrifice such a location and adopt a more expensive one for the waste heaps than to run the risk of destroying the whole mine by fire from the culm pile.

The advisability of having separate waste heaps presents itself in case of long suspensions of work, for the culm can then be conveyed directly to the boiler house from the culm bank without any previous preparation.

TRACKS.

2793. Railroad-Tracks.—One of the important matters that must receive attention at a colliery plant is the location of the empty and loaded turnouts for the cars that are used to ship the coal to market. This is often a very serious matter where the topography of the surface is such that, unless large sums of money are expended in excavating, very little room for tracks is obtainable.

Such a case is shown in Fig. 986, where the topography rendered it necessary to make a very extensive cut between the breaker and the main-slope hoisting-engine, in order to get the main line connected with the empty turnouts.

The tracks should be so arranged that very little shifting is necessary.

Assuming that the tracks are kept in a good condition, the grades should be such that a car will move readily by gravity as soon as the brake has been loosened, without the aid of barring.

To accomplish this, the empty track should have a grade of at least 2 feet in 100 feet, lessening to a grade of 1.5 feet at the entrance to the breaker.

The grade for the loaded tracks can be somewhat less; 1.25 feet in 100 feet is sufficient to run loaded cars over.

In every case the railroad facilities should be such that the receipt of the empty cars and the despatch of the loaded cars can be accomplished with the least possible difficulty.

2794. Mine-Car Tracks.—The general construction of mine-car tracks for the surface arrangement of mines does not differ to any marked extent from that of a large railroad, except that less attention is paid to the detail work; besides, the parts that go to make up the track are of very much lighter material.

In the anthracite region there is no standard gauge for the mine-car tracks. The gauges most commonly in use are 2 feet 6 inches, 2 feet 9 inches, 3 feet, 3 feet 6 inches, 3 feet 9 inches, and 4 feet. Intermediate gauges have also been used.

The grades of the tracks for the empty and loaded cars to run upon by gravity depend, in many cases, upon the mine-car, for there are some very easy and some very hard running cars. For an easy-running car to run by gravity, the empty track should vary in grade from 2 to 1.25 feet in 100 feet, and for loaded cars the loaded track should vary in grade from 1.25 feet to 0.75 foot in 100 feet.

The radii for the curves should be as large as possible, and never less than 25 feet.

The frogs used in connection with the track are usually made from rails. The tongue of the frog is made of two short pieces of rail, cut and riveted together so as to form the required frog angle. The wing-rails are a part of the switch rails leading away from the frog, but are bent to suit the frog angle by means of a rail-bending machine.

To avoid putting in a frog, a **cross latch** can be used. This is a short piece of rail with an eye in one end, so arranged that when it is put in place it can be thrown

across the one rail of the track that the car is to be put on or taken off.

The switches in many cases are the ordinary movable rail switch, but the one most commonly used is known as the **latch,** or **tongue,** switch.

The latches are wedge-shaped bars of iron with an eye in the thick end. The point and eye end of the tongue are set on small iron plates which are fastened to the cross-ties.

The latches are sometimes connected by a rod, so that they can be opened or closed at the same time. This switch in many cases is made self-closing, or automatic, by attaching the latches by a bar or lever to a metallic spring, an elastic stick of wood, or to a counterweight.

The cross-ties used vary in dimensions according to the gauge and the amount of traffic. Where a small locomotive runs over the track, the road is laid with good wide cross-ties. Ordinarily, hewed ties from 4 to 6 inches thick and from 5 to 8 or 9 inches wide are used.

The rails used are the regular **T** rails, varying in weight from 20 pounds to 50 pounds per yard.

The fish-plates are often the same as those used on a regular steam road, but in many cases they are made by the colliery blacksmith from old scrap iron that is gathered about the mine.

WATER-SUPPLY.

2795. The establishment of an adequate water-supply is often a difficult matter at anthracite collieries, and one that entails a great deal of expense. The water-supply at many of the collieries is obtained by damming up the small mountain streams. When this is done, the dam is usually above the level of the colliery, to obtain a sufficient head for forcing the water through the pipes to the different places where water is required about the plant; but in districts depending upon small mountain streams there is always a scarcity of water in dry seasons, and sometimes during very cold weather.

The larger streams that drain the coal fields are usually

so contaminated with the water that is pumped from the mines and with that coming from the coal washings that it is absolutely useless for steam purposes.

When these streams are fit for use dams are constructed, which, however, are generally on the same level or below the level of the colliery plant, so that a pump is needed to raise the water to the required height. At some of the collieries the water is obtained from a large stream located outside of the coal-producing area; at others it is obtained by sinking artesian wells. Of late years, many of the collieries purchase their water from some established water company, which in many cases pipe it a very long distance. As a last resort, the mine water is purified. The amount of sulphuric acid in mine water varies considerably. At some mines it has been known to reach 100 and even 200 grains per gallon of water. Such water will destroy iron with alarming rapidity, and must not be used in boilers under any circumstances. Water containing only two or three grains to the gallon has been known to ruin boilers in a few months.

2796. Where the water is purified, it is found that lime is the cheapest and best alkali to use, because the sulphate formed is least soluble. Soda or potash will serve the same purpose as lime, but the sulphates formed are entirely soluble in water and produce large deposits on evaporation. The sulphate of lime is also soluble, but to a very slight extent, 1 part of sulphate of lime being soluble in 400 parts of water. The reaction which takes place when lime is added to mine water can be expressed by the formula:

Sulphuric Acid.		Burnt Lime.		Sulphate of Lime, Precipitated.		Water.
H_2SO_4	+	CaO	=	$CaSO_4$	+	H_2O.

The process may be described as follows: The mine water is pumped into a tank or a series of tanks, and lime, slacked and reduced to a creamy consistency with water, is added, the amount varying from $\frac{1}{4}$ of a peck to $\frac{1}{2}$ of a bushel of lime for every 4,000 gallons. When sufficient lime has been added,

the contents of the tank are stirred until thoroughly mixed, and the mixture allowed to settle until perfectly clear. The time required for settling varies from ½ hour to 5 hours, according to the amount and the nature of the deposit. After settling, the water is drawn off into another tank or a series of tanks, from which it is pumped or injected into the boilers.

The deposit, or settling, is then removed from the tank, which is refilled and again operated upon.

Care should be taken to add just sufficient lime, so that the water will have no effect on litmus paper, either the red or the blue. If insufficient lime has been added, the blue paper will turn red, and if too much, the red will turn blue. Litmus paper is the best test to use for acid or alkali in this process.

2797. A positive test for detecting sulphuric acid is as follows: Add to the water suspected of containing sulphuric acid a strong solution of chloride of barium ($Ba\ Cl_2$); then, if any acid is present, it will be precipitated in the shape of sulphate of barium, a white powder; but, for purifying mine water upon a large scale, blue litmus paper is a sufficiently delicate test for acid. The paper is put into the water and moved around for half a minute. If the color of the paper does not change to red, no acid is present. This is not a positive test when minute quantities of acid are present; however, when such water is evaporated in a boiler, and blue litmus paper is placed at the open gauge-cock, it will turn red.

2798. As previously stated, the quantity of lime necessary to be added is gauged with litmus paper, the change of the blue paper to red showing that too little lime has been used, and the change of the red to blue showing that too much has been employed. It is in carefully guarding against the use of too little or too much lime, and thus obtaining water for use in the boilers as nearly pure as possible, that the secret of success lies. It is better, however,

that too much rather than too little lime should be used. If there is not sufficient lime, the acid will eat away the iron, which can not be replaced; but if there is a small excess of lime, the only consequence is a little more dirt in the boilers. In making steam from water purified by this process, a small deposit will form in boilers, which will require them to be cleaned out once a month. If, however, the water is put through a heater before entering the boilers, and raised to a temperature of from 280° F. to 320° F., it will be rendered as fresh and pure as rain-water, and will neither eat the iron nor form scale or mud.

THE PREPARATION OF COAL.

INTRODUCTORY.

2799. Anthracite coal, as it comes from the mines, is not marketable. "The run of the mine" can not, as in the case of bituminous coal, be sold. As it comes from the mine, the coal consists of (1) fragments of all sizes, mixed with more or less slate and rock; (2) more or less coal known as **bony coal** (slaty or argillaceous coal), and (3) lumps of coal with layers of slate adhering to one or both sides, or distributed throughout the lump, commonly known at the mines as **chippers.**

2800. To place the coal upon the market for domestic and manufacturing purposes, so that it will meet the approval of the consumers, it is necessary to subject the coal to a more or less complicated process of preparation, which has for its principal objects:

1. The removal of rock, slate, chippers, bony coal, and other impurities which are present in the coal as it comes from the mine.

2. The assortment of the coal into grades of nearly uniform size.

3. As there is a larger demand for coal of the intermediate sizes than can be supplied from the coal as mined,

it is necessary to break up some (or all) of the large lumps, so as to increase the percentage of the intermediate sizes.

All these objects are accomplished by the process of preparation in the breaker, which, according to the definition already given, is the structure containing the machinery used for the preparation of coal.

The purpose, then, of a breaker is to remove the impurities as completely as possible, and separate into the different sizes the coal that is to be put upon the market. This can be done either (1) by hand labor or (2) by mechanical means.

2801. In the first case, the coal is passed along chutes, on the sides of which men and boys are seated, who pick out the slate and, in some cases, the bony coal and the chippers. The bony coal and the chippers are separated only from the larger sizes of coal, varying from lump coal to stove coal, and are reprepared by breaking into sizes below stove coal.

In bony coal, the coal and slate are so interstratified as to destroy or greatly diminish its market value; while in the case of chippers, the coal and slate are so arranged as to give very little trouble in obtaining marketable sizes.

The chippers from the larger sizes (lump and steamboat) are prepared by what is termed **chipping.** Here the slate is separated from the coal by manual labor simply by using a pick, or in many cases by using a specially designed tool called the **pick hammer.** Below the sizes of lump and steamboat, the chippers and bony coal are generally prepared by the same set of rolls, known as the **bony-coal rolls.**

2802. In the second case, where the slate is separated from the coal by mechanical means, the operation will depend upon one of three physical characteristics of the coal and slate: (1) The difference in their specific gravity; (2) the difference of the forms into which they break, and (3) the difference of their angle of friction, or, in other words, the difference in the angle of a chute, lined with stone or iron, down which the coal or slate will slide without any increase of velocity. As a rule, slate will not slide down a chute which will carry coal.

The first of these refers to the jigging of the coal, and this operation may be performed by using either a wet or a dry jig. The wet jig is in use almost exclusively in the anthracite region, and will be described later.

The second characteristic refers to the difference of form into which they break; coal in breaking assumes a more or less rounded form, while the slate is broken into flat pieces. By running these two different forms over a chute, in which bars with longitudinal openings are placed, most of the flat pieces of slate will drop out through the small openings and the coal continue to the pocket or place of storage.

The above operation is also performed by a cylindrical screen, known in the breaker as the **slate-picker screen.**

The third characteristic: since slate will not slide down certain chutes that will carry coal, small openings are made in the bottom of the chutes at intervals. The coal glides over these openings, while the slate, which moves with a different velocity than the coal, in coming down the chutes at a higher velocity than the slate, simply dragging sluggishly along, drops through. In many cases sandstone slabs are used, which are placed in front of the openings in the bottom of the chutes.

2803. The method of preparation of coal is not the same throughout the anthracite coal fields of Pennsylvania. This is due to the different ways in which the coal-beds are deposited.

In the Wyoming and Lackawanna regions of Pennsylvania the coal seams lie more or less horizontally, and the coal, after it has been mined, is more or less prepared by the miner or the laborer while it is being loaded into the mine-car.

The miner or his laborer, in loading, is obliged to handle all the coal by hand; that is, he throws the large lumps into the mine-car by hand, and uses a shovel to get the smaller lumps into the car. While doing this, the larger pieces of rock and slate are thrown to one side to be stowed away in the underground openings of the mine, or they are placed

upon a heap, and afterwards loaded into a car to be hoisted to the surface and there deposited on the rock dump.

In the Lehigh and Schuylkill regions, where the beds have a more or less steep dip, the coal, after being mined, is loaded into the mine-cars from a chute or platform. The coal-beds in these regions are frequently wet, as compared with the coal-beds of the Wyoming region; consequently, the coal as loaded into the mine-cars consists of coal, rock, and slate, the whole being covered with a black muddy mass of fine coal and dirt, dripping with dirty water, and looking as it comes from the mine like anything but marketable fuel.

From the above, it can be readily seen that different methods of preparation must be used. On the one hand the coal is prepared dry, on the other it is prepared wet. The latter means that the coal as it passes through the different operations of preparation is treated with water to wash off the mud that adheres to the coal.

When water is used in the course of preparation, the method is more expensive than where the treatment is dry throughout; for the former requires extra machinery, and, since the water used is in many cases pumped out of the mine, the acid in it soon destroys the machinery and other parts with which it comes in contact.

THE ANTHRACITE COAL-BREAKER.

2804. The evolution of the anthracite coal-breaker forms an extremely interesting chapter in the history of the Pennsylvania coal trade.

In the early history of the coal trade, the coal was shipped to market as it came from the mine, the consumer breaking it up with hammers and screening it himself; but the loss of the fine coal, which was practically useless, since it could not be burned in an ordinary grate nor in any appliance suited to the combustion of coarse coal, was so heavy, and the trouble, annoyance, and cost of breaking up the coal by hand became so great, that it led to the introduction of machinery to break and screen the coal and classify it according to size.

Innumerable devices have been experimented with for breaking the coal, commencing with the hammer, passing through various types of toothed plates, to rolls with teeth, and corrugations of various forms.

2805. As the machinery has been improved the waste in preparation has been diminished, not only by better and more careful handling, but also by utilizing a larger proportion of the coal. It is not very long since *chestnut* was the smallest size of salable coal, while everything below that size went to the culm pile. The introduction of improved forms of grates and furnaces has added to the market list the following additional sizes: *pea*, *buckwheat*, and *rice*, which find extensive use in the production of steam, thus enforcing economy both in production and consumption.

2806. Anthracite breakers, in some cases, occupy as much as 23,000 square feet of surface, and vary in height from 50 to 145 feet, according to the method in use for the preparation of the coal. It is always desirable to handle the coal by gravity, allowing it to slide down chutes from each set of bars (or rolls) or screens, until it reaches the pockets. Hence, it is always better to have the necessary height, instead of elevating the coal a second or a third time by a system of elevators.

In capacity, anthracite breakers range as high as 4,000 tons per day. By this is meant the coal loaded into railroad-cars after it has been prepared in the breaker.

The capacity in every case depends upon the screening surface and the rapidity with which the coal can be run through the breaker, for it is generally found in practice that the rolls are capable of crushing more coal than the screens can handle.

2807. The general plan of a breaker structure is in the form of a wooden trestle, although of late years iron breakers have been introduced. Where iron is used, the breaker is a pin-connected structure, the posts being of cast iron, the struts generally of cast iron, and the rods of wrought

iron. Most of the large beams are riveted-plate girders; the smaller ones are rolled.

These iron structures are generally built for the purpose of guarding against destruction in case of fire. The framing of a breaker structure must be of the most substantial character; the heavy machinery that is required, the weight of the coal undergoing preparation, and the large surface presented to the force of the elements show the necessity for strength.

The timber ordinarily used in their construction is yellow pine, white pine, hemlock, oak, and birch.

The posts are generally of white pine or hemlock, and are usually of the following dimensions, in inches: 12 × 12, 12 × 14, 14 × 14, 14 × 16, 8 × 8, and 6 × 8. In some of the breakers recently constructed the posts are double; that is, they are made up of two pieces of timber, which can be renewed by taking out one side at a time, as shown in Fig. 994. Where these posts are used, they are usually of the following dimensions: 10 × 12, 5 × 12, and 5 × 10.

The sills are usually of oak, and in dimensions to suit the above sizes of posts.

The braces are of hemlock and white pine, and are usually of the following dimensions: 4 × 6, 6 × 8, and 6 × 12.

The stringers are usually either of white and yellow pine or hemlock, and of different dimensions. Birch is used in the form of boards for lining the bottoms of the coal pockets.

Further on is shown the plan, elevation, and cross-section of an anthracite breaker; but before entering into a description of it, the different methods of getting the coal into the breaker and the machinery used in preparing the coal will be discussed.

METHODS OF GETTING THE COAL INTO THE BREAKER.

2808. The coal as it comes from the mines is almost invariably conveyed to the top of the breaker, where it is dumped into a chute known as the **dump chute,** which contains a set of inclined bars, over which the coal runs; or

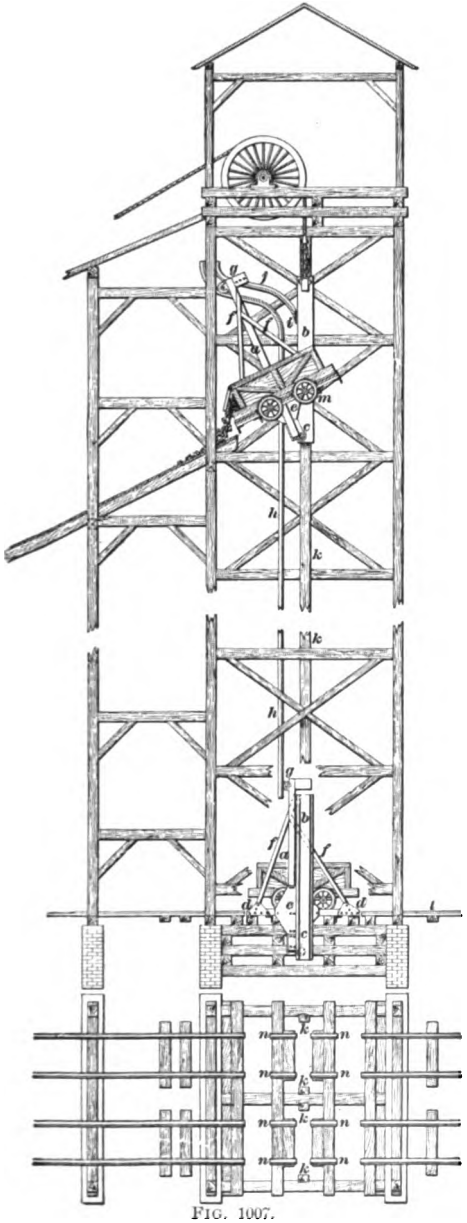

FIG. 1007.

it is first dumped into a chute or pocket, from which it is slowly fed under a gate and allowed to slide down over the bars.

In case the opening is a shaft and the breaker is located the required 200 feet from the shaft, one of the methods of getting the coal to the top of the breaker is by means of what is termed a **vertical hoist,** Fig. 1007. This figure shows the plan and elevation of a double vertical hoist. The coal after reaching the surface is conducted from the mouth of the shaft to the foot of the vertical hoist, either by gravity or by some one of the many other methods of transfer.

The vertical hoist, or hoistway, contains two self-dumping cages. These cages are built of angle-iron and are riveted throughout. The

cage is made up of two parts, *a* and *b*, united by the hinge *c*. The part, or platform, *d* which carries the car is fastened to the part *a* by the support *e*, and is further secured by the braces *f*. To the part *b* the rope is securely attached. To the part *a* is attached a small wheel *g* which runs along the rail *h*. This wheel *g* keeps the parts *a* and *b* of the cage closed when the cage is in a vertical position, as shown at the foot of the hoist. At the top of the hoist the rail *h* is bent, as shown, and as the wheel *g* follows the rail *h* up the hoist, at the point *i* it is made to follow the rail *h* by means of the guard or deflection rail *j*. As the wheel *g* follows the curve of the rail *h*, the parts *a* and *b* become separated, and in so doing the self-dumping part of the cage comes into play. The part *b* of the cage is kept in a vertical position by means of shoes which act on the cage-guides *k*.

2809. The plan shows the arrangement of the tracks and guides. The car as it comes from the mine runs on the cage, as shown, from track *l*. As soon as the cage is raised from its position in the pit, the wheels of the car drop into the opening *m* made by the rails *n* shown in plan; this fastens the car to the cage, so that there is no danger of it leaving the cage when it is being dumped.

The car, while being dumped, can be given different angles of inclination, simply by notifying the engineer in charge of the hoisting-engine to raise or lower the part *b*. As *b* is raised or lowered, the part *a*, by means of the wheel *g*, assumes different positions.

The vertical hoist varies in height from 50 to 145 feet, according to the height of the breaker, and can also be used when the main opening is a slope, drift, or tunnel.

In the operation of dumping, only one man or boy is required. He attends to the opening of the latches on the car, also to taking off the tickets which are used to designate by whom the coal was mined.

2810. A plan of one of the many different methods of transferring the cars from the shaft opening to the vertical hoist is shown in Fig. 1008. The coal that is handled by the

breaker A is elevated to the top of the breaker through the vertical hoist B. The coal handled is mined through the two shafts C and D. The loaded tracks E and F leading away from these shafts are on a descending grade from the shaft mouth to the foot of the vertical hoist. The

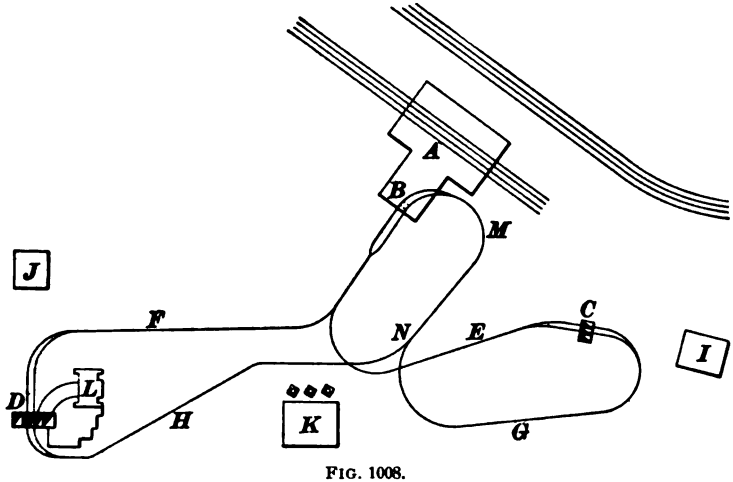

FIG. 1008.

loaded track E has a descending grade of $1\frac{3}{4}\%$, while the loaded track F has a descending grade of $1\frac{6}{10}\%$.

The empty cars, after leaving the vertical hoist, are run to the foot of the inclined chain hoist $M\,N$; at the top of this chain hoist are the two empty tracks G and H leading back to the mouths of the shafts C and D. Both the empty tracks are on a descending grade of $1\frac{3}{4}\%$ from the top N of the chain hoist to the mouths of the shafts C and D.

In this plan, I is the engine-house containing the winding-engine for shaft C, while J is the engine-house containing the winding-engine for shaft D. The location of the boilers that are used to furnish steam for these engines is shown at K, while L shows the location of the ventilating fan.

2811. Another method of getting the coal to the top of the breaker from a shaft opening is shown in Fig. 1009, where an iron or steel chute is built in connection with an iron or steel head-frame. The hoistways in connection with

this head-frame are fitted with self-dumping cages, the car never leaving the cage while it is being dumped. The coal is then elevated direct from the underground workings through the shaft opening and dumped into the chute which conveys the coal to the top of the breaker.

In order to comply with the Anthracite Mine Law, the breaker is located at a distance of 200 feet from the shaft opening, as shown. The height of the breaker, together with the extra height that must be allowed for the inclination of the chute in a distance of 200 feet and over, necessitates the building of a very high head-frame.

In Fig. 1009 the head-frame is 52 feet square at the base and 187 feet high to the summit. At a height of 149 feet the chute is reached, and at this point the cages stop. The length of the chute is 216 feet. It has a capacity of 100 tons

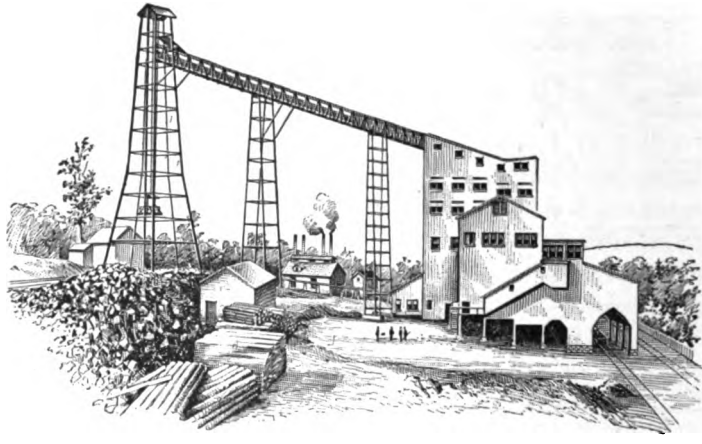

FIG. 1009.

of coal, and is generally kept nearly full to prevent excessive breakage of the coal. Besides being supported at one end by the breaker and at the other by the shaft head-frame, or tower, it has two steel towers as additional supports.

2812. Fig. 1010 shows another method of getting the coal into the breaker where the top of the breaker is below the level of the opening, thus allowing a descending grade

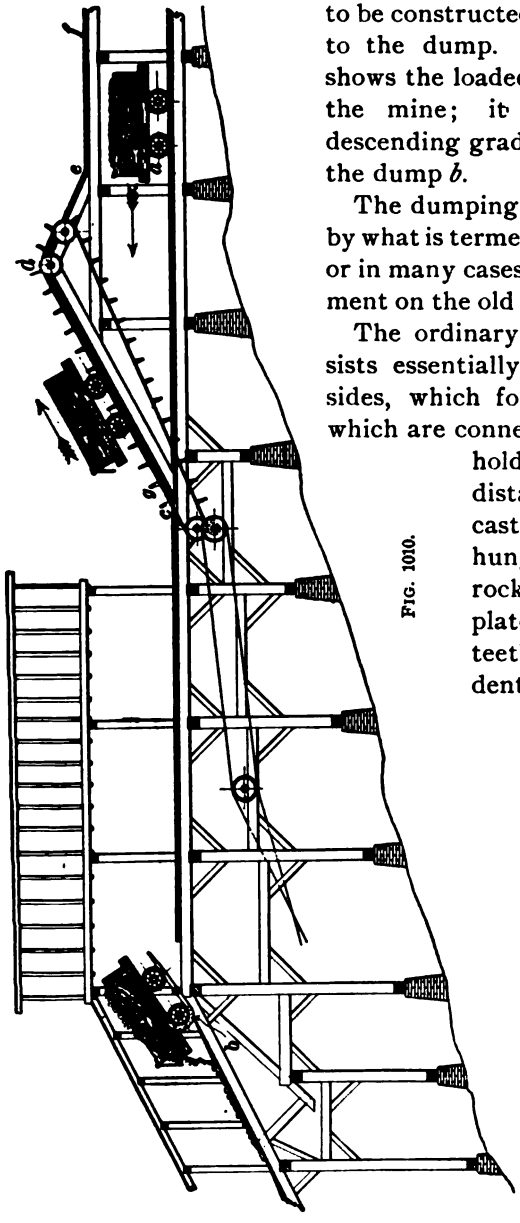

FIG. 1010.

to be constructed from the opening to the dump. In the figure, *a* shows the loaded car coming from the mine; it continues on a descending grade until it reaches the dump *b*.

The dumping is here performed by what is termed a **cradle dump,** or in many cases by some improvement on the old style cradle dump.

The ordinary cradle dump consists essentially of two cast-iron sides, which form the track and which are connected by bars that hold them the proper distance apart. The cast-iron sides are hung on adjustable rockers, resting on plates provided with teeth that fit into indentations on the rocker, to prevent it from slipping. As the car runs upon the dump and strikes the horns *b*, which curve upwards, a man or boy knocks up the door-latch, or fastening. As soon as all the coal has run out of the car, the dump is pulled down by a lever, and the car runs off.

From the dump the empty car runs to the foot of the hoist *c*. This hoist is fitted up with an endless chain. To the chain at intervals are attached projecting pieces, or grips *g*, which take hold of the axle of the car. The power is transmitted to the hoist by means of a wire or hemp rope, connected in some way with the breaker engine.

The car in running over the knuckle *d* is freed from the chain, and in running down the short incline *e* it acquires a certain momentum; this, together with the grade of the empty track *f*, carries the empty car back to the mouth of the opening.

Where the opening is a slope, some such safety arrangement as shown in Fig. 996 is used, so that the cars, in returning from the dump, will not run into the slope.

2813. Figs. 1011 and 1012 show the method of getting the coal to the top of the breaker by means of an inclined plane and a barney.

This method is generally adopted where, by using an inclined plane, a descending grade can be had for the loaded cars from the opening to the foot of the plane, and also a descending grade from the bridge at the foot of the plane for the empty cars to return to the opening. Or, it is frequently used where the coal is brought to the foot of the plane by a small locomotive or by an electric motor from some opening located at a considerable distance from the breaker.

The great success of this method in handling the coal lies in the facility with which the cars are handled at the foot of the plane, and in the rapidity with which they are handled on the dump.

The essential parts of this arrangement are the swinging bridge *A*, the barney *B*, and the arrangement of the tracks at the top and bottom of the plane.

2814. Fig. 1011 shows the arrangement at the bottom of the plane; *C* is a section through *Y Y*, showing the arrangement of the tracks; *D* is a section through *X X*, showing the arrangement of the swinging bridge which is used

to take the empty cars off the plane; *E* is a plan of the swinging bridge, showing the arrangement for opening and closing the bridge. This bridge consists of two trusses, having bearings at *c* and *d*, so that by swinging around them the bridge is opened and closed.

The dotted lines in *D* show the position of the bridge when open, ready for the loaded car to ascend the plane; the full lines show the position of the bridge when it is closed, shown also in the plan *E*, ready for the empty car to run over the bridge in descending the plane.

The hoisting rope is attached permanently to the barney *B*. This barney is made in two parts, *e* and *f*, united by the hinge *g*. The part *f* carries four wheels, which run over a narrow-gauge track located within the track that the mine-car runs over, as shown at *s* in the cross-section *C*.

The part *e* of the barney which is known as the **pusher** carries two small wheels *h*, one on each side, known as the pusher wheels. The part *i* is known as the **check horn,** which is used to keep the mine-car in position during the operation of dumping. The barney is made narrower than the car, and passes between the sides of the swinging bridge and between the rails of the mine-car track. The barney track is continuous and unbroken from the barney pit to the dump at the top of the breaker.

The mine-car *j*, as it comes from the mine, is run to the foot of the plane and placed in position, as shown. The barney, from its position in the pit, is back of the loaded car and pushes it up the plane. In going up, the loaded car finds the bridge open; but when the barney reaches the lever *k*, it pushes forward the levers *l* and *m*, and closes the bridge, so that it will be ready for the empty car when it descends.

When the barney descends it finds the bridge closed, and when it reaches the lever *n* its axle pushes forward the levers *o* and *p* by means of the lever *n*, and thus opens the bridge for the loaded car to ascend the plane. The dotted levers marked *n n*, *p p*, and *o o* are the same levers, but shown in different positions. The two pusher wheels *h* of

the barney, as it descends into the pit, lift the latches *q*, which are hinged at their upper end and fall freely, so that when the engine is reversed and the barney is hoisted these latches catch the wheels *h* and force the pusher *e* open. As the wheels are obliged to follow the track *r*, the pusher comes in contact with the car *j* and forces it forward and then up the plane. It will be observed that the larger wheels of the barney, while in the pit, have a rail *s'* above as well as the rail *s* below them; this is to prevent the wheels from rising, and the barney from getting off the track.

The opening and closing of the swinging bridge are performed, as already stated, by the levers *k* and *n*, in conjunction with the levers *m* and *p*. There are rods *v* and *w*, leading from the levers *m* and *p* to the lever *x*, which works on a pivot, as shown, supported by the piece of strap iron *y* which is bolted to the stringers of the inclined plane. At the end of the lever *x* are the levers *z* and *z'*, made, as shown, with the different joints. These levers connect the trusses of the swinging bridge with the lever *x*. From this plan it can be readily understood how the operation of opening and closing is performed by operating the rods *v* and *w*.

The weight *a*, in connection with the lever *b*, is used as a counterweight to balance the bridge-shifting mechanism.

2815. Fig. 1012 shows how the dumping is performed by means of the barney at the top of the breaker. The mine-car *j* follows the track *t*, and as soon as the wheels of the car *j* strike the horns *u* the car is stopped, and the barney continuing to move raises the back end of the car until it assumes the position shown in the figure, the body of the car turning around the front axle.

Where the above barney and method of dumping are in use, it is customary to use a drum having a friction-clutch, so that the engine is used only for hoisting the loaded car, the empty car being loaded by means of a brake. Where this is done the engine is always kept running in the one

direction, and by simply applying the clutch the desired result is obtained. At the head of the plane a man is employed, whose duty it is to take the tickets from the car, knock open the latches, and see that the car is entirely rid

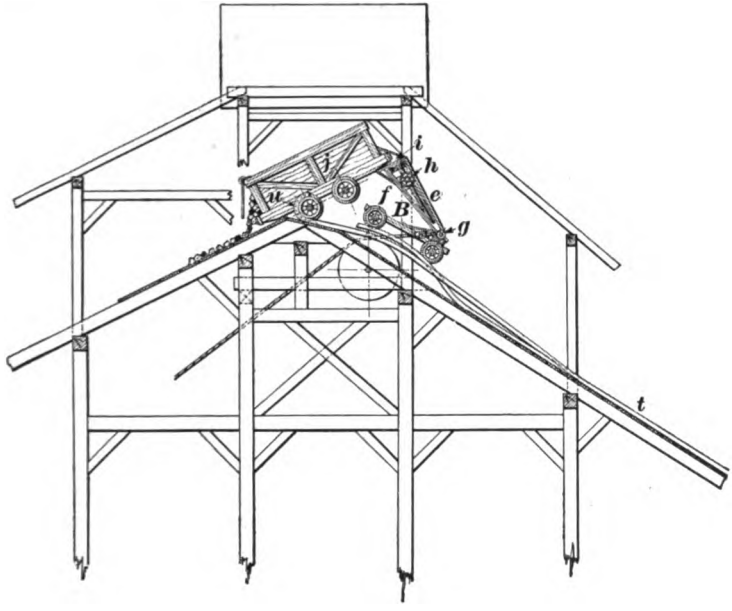

FIG. 1012.

of its contents before being allowed to return to the mine In most cases, however, the door of the car is opened automatically.

2816. Fig. 1013 shows the method of dumping where the breaker is erected in line with the slope or where there is a continuation of the slope through an open trestle. The hoisting-engine in this case is located either in line with the slope at some point back of the breaker or in the lower part of the breaker. In this case the rope runs through the breaker, as shown, the engine being located in the lower part of the breaker. In this method of dumping, the rope is attached to the mine-car by what is termed a **spreader.**

The spreader consists of two pieces of wire rope or chain

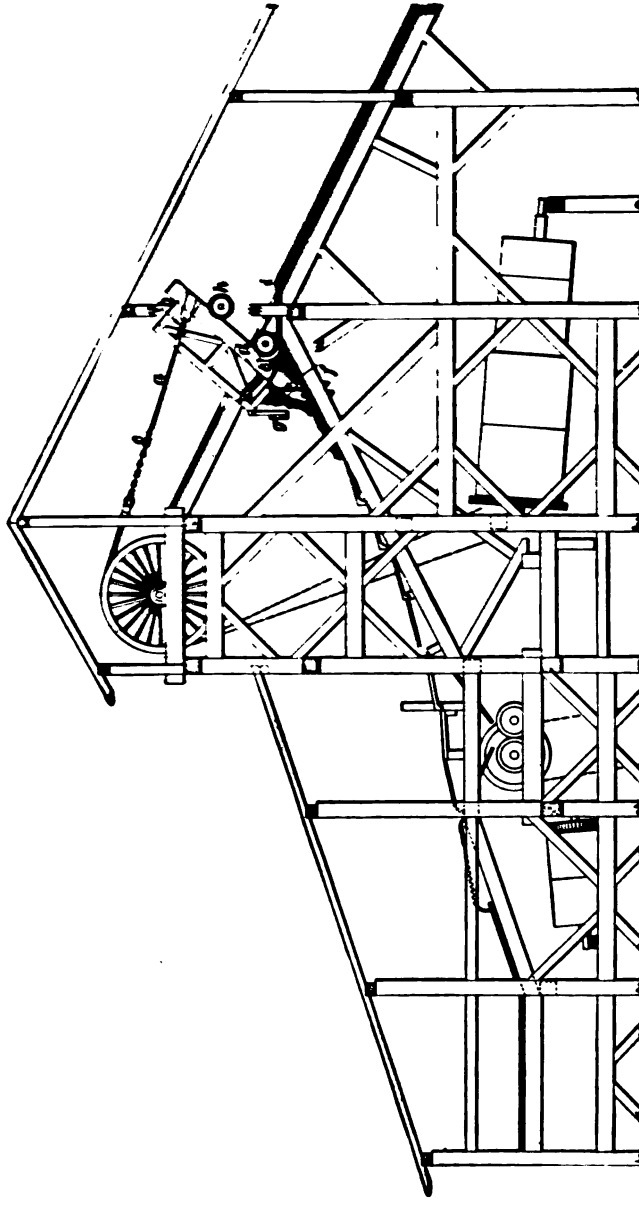

FIG. 1018.

a, with two hooks *b*. At *c* there is a **spreader stick,** which is used to keep the wire ropes spread.

This spreader stick is usually made of a piece of 1½-inch to 1¾-inch gas-pipe. A piece of wood of the dimensions required to resist the strain is entirely too heavy. The cars for this method of dumping are built so that the hooks *b* of the spreader can be attached to the side at the rear end of the car, as shown. At *d* there is a carrying hook to hold up the spreader from the wheels of the car while the car is ascending and descending the plane. The wheels of the car, in ascending the plane, strike the horns *e*; the engineer in charge of the engine continues to hoist, so that the body of the car turns around the front axle into the position shown, a constant pull being maintained upon the rope.

This method of dumping is known at the mine as the **forward dump,** in distinction from the one where the door is placed at the rear in ascending the plane.

The arrangement *f* is used for opening the latches *g* on the car. When the wheels of the car strike the horns *e*, the latches of the car are directly above *f*, and as the car is raised the part *g* presses down on *f*, thus relieving the door.

In designing the above style of dump, the main point is to get the hind wheels *h* of the mine-car to strike the short knuckle *i*, so that when the car is lowered it will move down the plane without the assistance of any one to start it off.

2817. Fig. 1014 shows the method of dumping and getting the coal directly into the breaker from a slope that is on a very heavy pitch. Generally, where the slope is pitching above 60° it is not economical to hoist the coal to the surface in mine-cars, but to accomplish it by the use of gunboats, or, as they are sometimes called, *monitors*.

The following reasons are given for this: Much labor is saved in switching, running the cars on and off the slope, attaching and detaching the rope at the bottom, and the same operations at the top. When hoisting up a slope where the pitch is heavy, the strain on the car is very great; this tends to cause accidents, and makes it necessary to have cars

of better construction than would otherwise be necessary if the pitch were lighter. To prevent the coal from falling out of the cars, coverings are attached to them, so that when they reach the foot of the slope these coverings, or doors, are placed in position. This operation requires time and somewhat delays the steady movement that is always found necessary in order to do good work at the foot of the slope.

In some cases a number of cross rails are put on top of the cars, which render them very difficult to load, and also

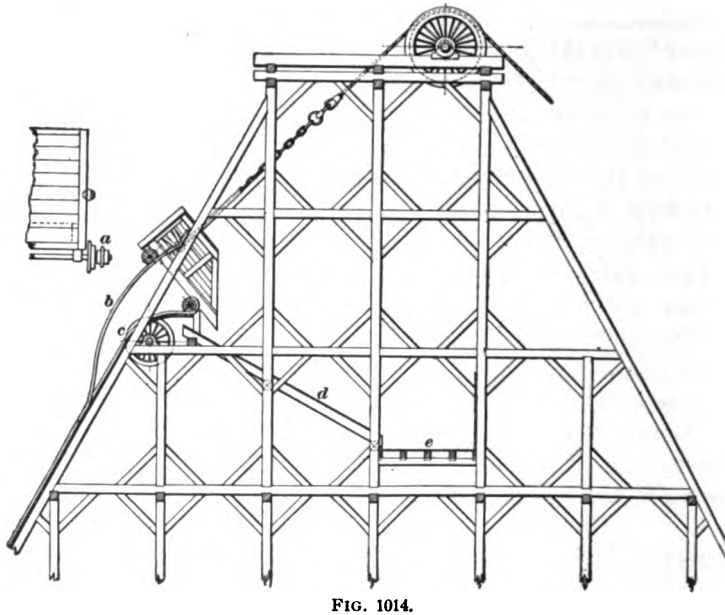

FIG. 1014.

prevent them from being properly filled. For these reasons the gunboat is used on heavy pitches. Where the gunboat is in use the mine-cars circulate only in the underground workings, their contents being dumped into the gunboat at the bottom of the slope or at any other convenient point upon it.

2818. The gunboat is a self-dumping car, very solidly constructed, open at one end. It has a capacity of two or three ordinary mine-cars. The figure shows the side and

the part of an end elevation of a gunboat. The one shown is built of oak timber, lined inside with heavy sheet iron. In many cases the gunboat is built throughout with boiler iron. The wheels are shrunk upon the axles, which are seated in specially designed pedestals.

On the axle at the rear end of the gunboat a wheel *a* is placed which works loosely upon the axle; having a wider gauge, it strikes the auxiliary track *b* just before the front wheels of the gunboat reach the knuckle *c*.

The same object is sometimes accomplished by making the hind wheels of a very much broader tread than the front wheels.

The auxiliary track *b* is a heavy rail bent to the proper curve and securely supported and fastened.

Where gunboats are in use it is frequently the case that quite high towers, as shown in the figure, are necessary, which require considerable bracing to withstand the great strain to which they are subjected by the great weight that is raised at one time. The breaker in this case is erected at the side of the tower, the coal being first dumped into the inclined chute *d*, and from there conveyed into the chute *e*, which is at right angles to the chute *d*.

The bars over which the coal then runs to remove the finer sizes are arranged in a chute parallel to the chute *d*, or very nearly so.

2819. On slopes with very heavy pitches, where the mine-cars are brought to the surface, what is known as the **slope transfer carriage** is used, a side view of which is shown in Fig. 1015. The mine-car *A* is hoisted with a triangularly shaped carriage whose frame *B B B* is built at an angle to suit the slope *C C C*, and on top of which the car *A* rests while being hoisted.

The car is held in place by a drop platform *D*, an arrangement which allows that portion of the platform of the carriage underneath the wheels of the car to sink into the carriage a sufficient depth to keep the car from running off. This drop platform is a separate frame, with the cross-pieces

E, *E* a little longer than the wheel base upon which the car stands. These cross-pieces project at least 4 inches over the sides of the carriage, so that when the catches are put in at the top or bottom of the slope they catch the parts *E*, *E* of the drop platform, and the cage settling back brings the top of the safety blocks *F*, *F*, the cross-pieces *E*, *E*, together with the rails *r* of the carriage, and the drop platform flush

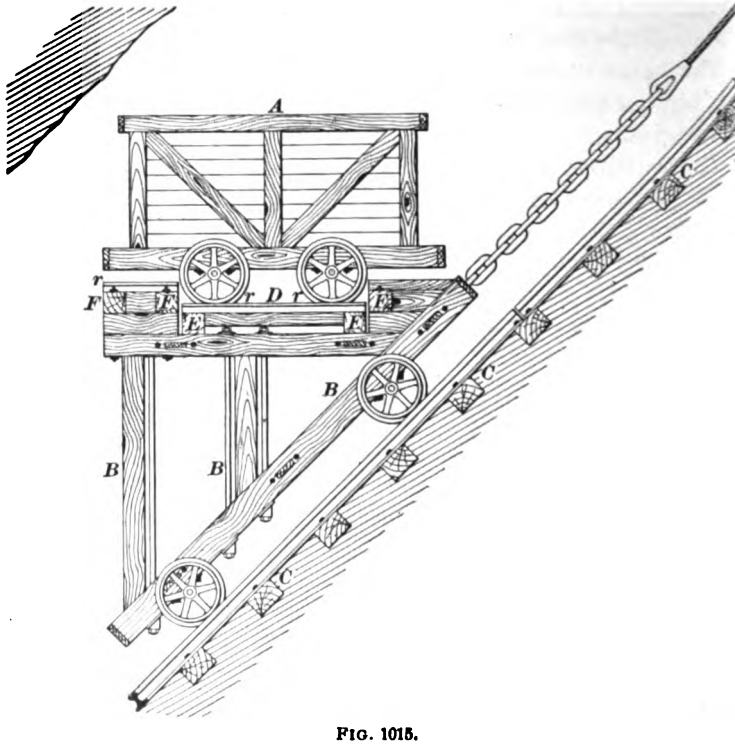

FIG. 1015.

with each other, thus allowing the car to be run on and off. When the rope lifts the carriage off the catches, the drop frame, which is fitted inside the main frame in guides, sinks down the required distance, causing the car to stand in the recess, effectually blocking it, and preventing it from running off the carriage or against the slope timbers during its transmission up and down the slope.

In some cases these carriages run to the top of the breaker, where the car runs direct from the carriage to the dump; or the mine-car is taken off at the mouth of the slope, and

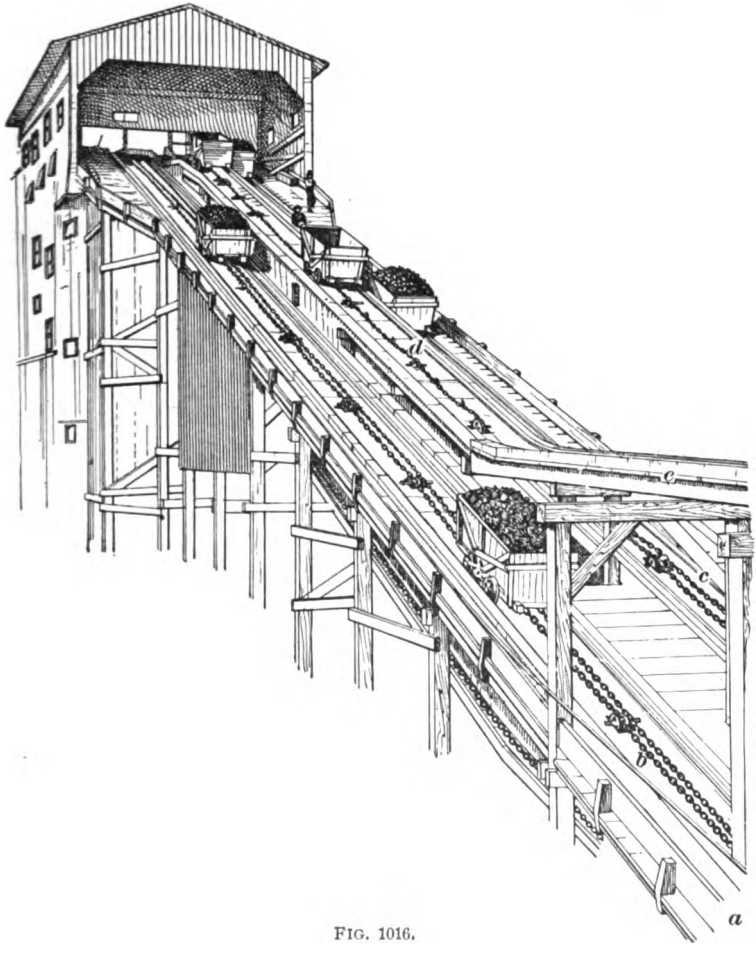

FIG. 1016.

the cars reach the top of the breaker by some one of the methods that have been or will be described.

2820. Fig. 1016 shows the arrangement for getting the coal to the top of the breaker by means of a link-belt hoist.

This hoist is in use where the loaded cars from a shaft opening run by gravity to the foot of the inclined plane *a*, where they are fed on either side *b* or *c* of the plane. The empties are returned by a third track *d*, located in the center of the plane, as shown. In order that the empties can be returned to the shaft opening by gravity, they are taken off the plane by means of an overhead trestle *e*.

This hoist is driven by the breaker engine, the gearing being so arranged that the hoist can be stopped and started without interfering with the running of the engine.

The car, in running to the foot of the plane, is **scotched,** which is a term used at the mines to denote a method of hold-

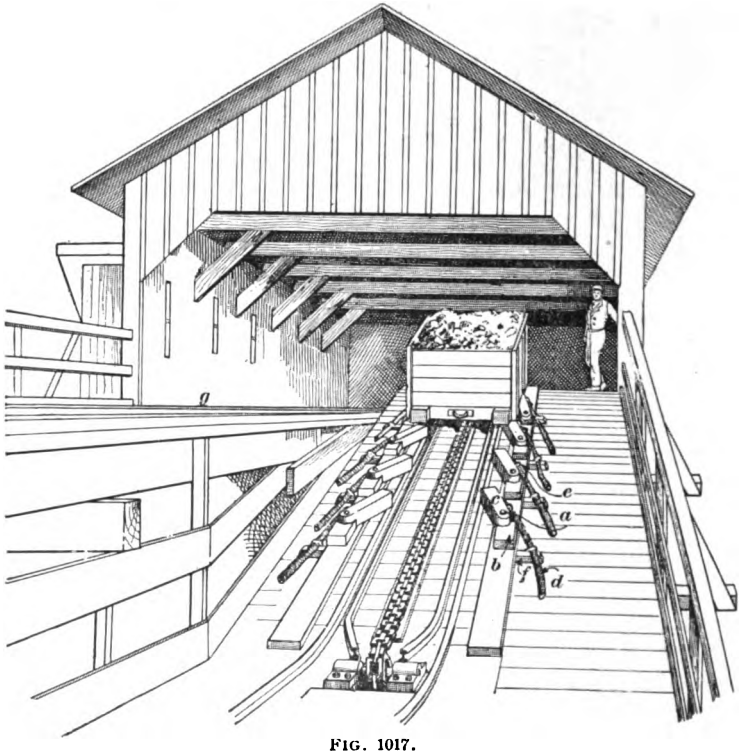

FIG. 1017.

ing the car in the one position. Here it remains until one of the projecting attachments on the chain catches hold of

the mine-car axle and conducts it up the plane. These projections, or grips, are attached to the chain, and located such a distance apart as to regulate the feeding of the cars to the dump in accordance with the time required in dumping.

The figure does not show the arrangement of any safety attachments, but at the mines where a chain hoist is in use a safety device is generally located on the plane at every 10 or 12 feet, to prevent the loaded cars from descending and doing any damage in case of an accident to the chain.

2821. Fig. 1017 shows a very cheap but efficient system of blocks used in connection with chain hoisting. The blocks are made of oak, shod with ¼-inch iron on the side towards the rail. The blocks are fastened to the plane at their lower ends *a*. This fastening serves as a hinge. The block is further supported by the piece *b*, which acts as a brace. The block *c* is kept in position on the rail by the round green oak stick *d*, which is very elastic and acts as a spring. It is fastened to the block by means of a staple *e*, and to the plane by the staple *f*. As the car goes up the plane, the wheels of the car push the block *c* aside; after it has passed, the block resumes its position on the rail, on account of the tension of the spring pole *d*. The cars, after being dumped, are returned over the empty track *g*, which has a descending grade to the mine opening.

MACHINERY USED IN THE PREPARATION OF COAL.

CLASSIFICATION.

2822. The machinery used in the preparation of anthracite coal is divided into the following classes:

Machinery for sizing the coal.
Machinery for breaking the coal.
Machinery for separating the slate from the coal.
Machinery used for conveying the coal into the breaker.

MACHINERY FOR SIZING THE COAL.

2823. This may be divided into two classes: (1) fixed or movable bars and (2) fixed or movable screens.

In the first class the openings through which the coal falls are much longer than they are wide, while in the second class they are nearly square.

In special cases the first class may be used to take out dust or fine coal, otherwise it is seldom employed, except for large coal, or when exact sizing is not important. The reason is that long flat pieces fall out with the cubical pieces of much smaller dimensions, rendering the coal thus sized very irregular in form.

2824. There are three types of the first class in common use:

1. Bars supported at both ends, which are either fixed or adjustable.
2. Finger-bars, supported at one end.
3. Oscillating bars.

2825. 1. The **bars supported at both ends** are either fixed or adjustable, the former being in more general use than any other type.

One great object to be accomplished in screening, whatever the type of bars, is to get the coal to run freely over them, so that the bars will not become clogged up. Bars that are made flat do not accomplish this object as thoroughly as pointed or rounded ones, because on a flat bar the fine fragments have no special tendency to run into the openings between the bars.

Bars with a rounded head are in more general use in the anthracite region than any other form. The one shown at *A*, in Fig. 1018, is a fixed bar supported at both ends. This type is made of cast iron, placed and supported as shown at *B*. The top of the bar is cylindrical and projects beyond the web which supports it, so that any lump which passes through the upper part will fall freely without jamming. This type of bar is usually made about 4 feet long.

The adjustable bar supported at both ends is, as the name

implies, one whose position can be adjusted. The coal to be sized is made to slide longitudinally over it.

The ends of the bars are made V-shaped, to fit into similar grooves on the transverse pieces by which they are supported. The bars can be placed at any required distance from each other, the usual opening being 3½ to 4 inches.

The **finger-bars** shown at *C* are an improvement upon the bars just described and those in ordinary use.

The lower end *f* of the bar is entirely free, and the bars are narrower at *f* than at the upper end *g*, so that should

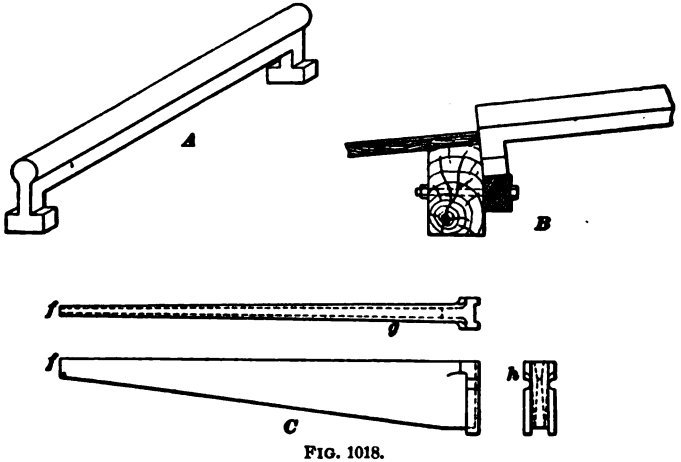

FIG. 1018.

any lump become wedged it is likely to be loosened by the first lump which strikes it.

In the vertical edges of the upper end of the bars are two half holes *h*, by which they are bolted to the beam or bearings.

2826. Movable, or **oscillating, bars** consist of two frames, each carrying a set of narrow bars, placed sufficiently far apart to allow coal of the required size to pass between the bars of each pair. The bars are oscillated back and forth by eccentrics on the main driving-shaft, which are so connected with the bars that the motion of the latter is approximately horizontal. The throw given them is about

3 inches. On the main or driving-shaft there are two eccentrics, placed 180° apart.

The coal fed upon this apparatus at one end will be slowly transported to the other end when the frame is set horizontally, or even if inclined at a slight angle. At the same time the coal is slightly jarred, the dust and dirt shaken off, and all the small pieces are sure to fall through into the hopper below.

Reciprocating screen bars of this description undoubtedly reduce the amount of labor to be performed by the men on the platform, and at the same time reduce the height of the breaker.

2827. Fixed screens consist simply of an inclined plane, formed either of woven-wire screens or punched or cast plates, with round, square, oblong, or other shaped holes. The coal in this case is allowed to slowly slide or roll down this plane by gravity.

The larger pieces pass over and the smaller fall through it. By placing several screens with openings of decreasing size underneath one another, or a series with openings of increasing size in the same chute following one another, any desired number of sizes can be made. While the coal is being handled or moved in the breaker, a certain proportion of small pieces always breaks off, so that when the coal is loaded from the pockets into the cars it is necessary to take out this finer coal. This is done by allowing the coal to pass over a set of bars just before entering the railroad-car. When the fixed screen is used for this purpose it is known as the **lip screen.**

2828. Movable screens are among the most important parts of a breaker. They are of two types. In the first type the screening surface forms a cylinder and revolves about its axis; in the other type the screening surface is approximately horizontal.

2829. Before discussing the construction of screens and methods employed, it is first necessary to know the

sizes of coal that are to be prepared in the breaker. The sizes generally prepared are as follows, arranged in order, commencing with the largest size first: **Lump, steamboat, broken, egg, stove, chestnut, pea, buckwheat,** and **rice.** Lump coal is prepared on the platform, and all the other sizes are prepared by sizing in different screens, known as the steamboat, broken, egg, stove, chestnut, pea, buckwheat, and rice screens.

2830. A breaker generally has a screen known as the slate-picker screen, and there are others known as the *main* and *counter*, or *mud*, screens.

Screens are made **single** and **double jacketed,** and derive their names from the size of the coal which they prepare in the **first jacket,** or in other work. Screens are always designated by the size of coal that comes out of the end; for example, the steamboat-coal in a steamboat screen comes out of the end, while all smaller sizes fall through the meshes and pass on to some other screen.

The term **main screen** designates a screen preparing several sizes; for example, the main screen usually prepares egg, stove, and chestnut, although it would not be wrong to term the above an egg-coal screen.

The **mud screen** is the name given to the one that takes the coal coming from the main bars, or, as they are sometimes called, the **platform bars.** This screen is also sometimes called the **counter screen.** The term *counter screen* always refers to a screen that is located above the main screen or other sizing screen, through which the coal is run and partly sized before entering another screen for the final sizing. This is done in order to get the slate out of the larger sizes of coal by hand picking.

2831. In many cases breakers have what are known as **counter, mud, chestnut, pea, buckwheat,** and **rice screens.** These are located below the mud screens and prepare the coal that comes from the mud screens directly for the pockets for shipment, or for use at the mines to generate steam. This coal is not mixed with the coal that

comes from the main crushers and that coming from the prepared-coal rolls.

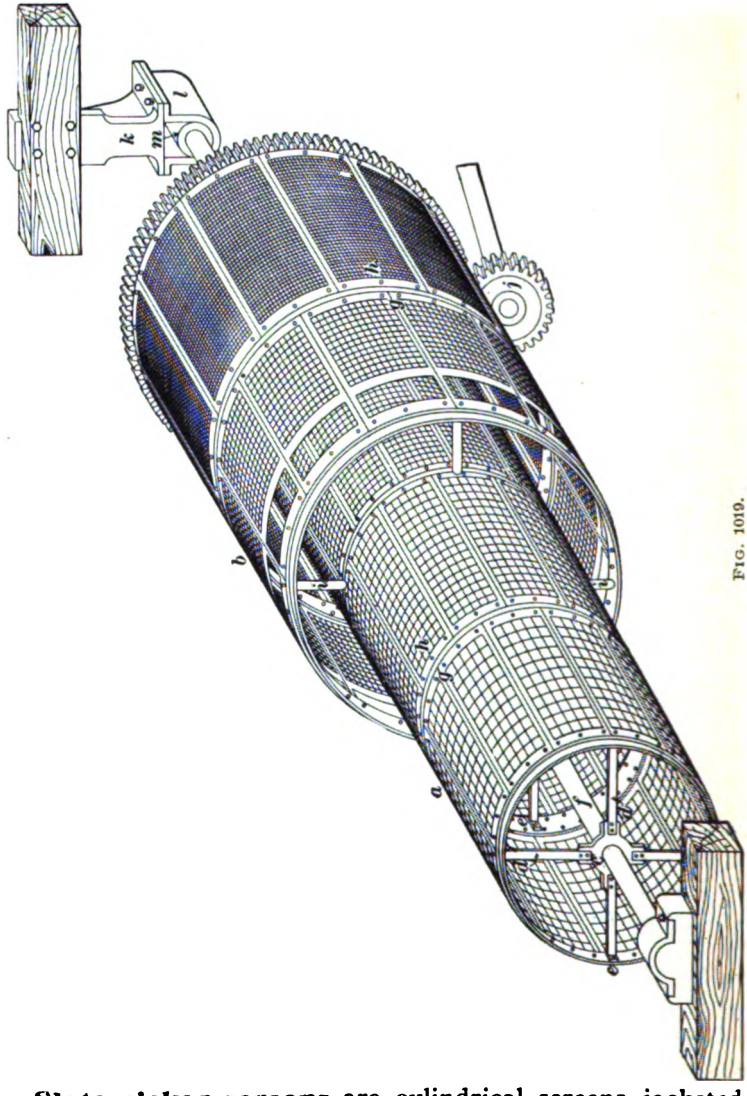

FIG. 1019.

Slate-picker screens are cylindrical screens jacketed with cast-iron segments, provided with narrow slits through

which the flat pieces of slate fall, but through which the coal (not being flat) can not pass.

2832. Fig. 1019 shows a main screen used in the anthracite region, which is usually from 16 feet to 30 feet in length. The diameter of the first jacket *a* is usually from 5 to 6 feet, while the diameter of the double-jacketed part *b* is usually from 6½ to 8 feet. These screens are set on an inclination of ⅛ inch to 1 inch to the foot, so that the coal will travel slowly from one end to the other. They are run at from 8 to 10 revolutions per minute.

These screens are constructed of a number of cast or wrought iron spiders set at intervals of from 3 to 5 feet apart, on wooden or wrought-iron shafts, although of late years Phœnix columns are being used for the shafts.

The spiders are made up of a cast-iron hub *c* having four wrought-iron arms *d* bolted to it. The arms are either riveted or bolted to the ring or circle *e*, and the hub is keyed to the shaft *f*.

The jackets *a* and *b* may consist of either a series of wire, cast-iron, or wrought-iron, or steel punched gratings of the proper mesh, called **segments.** In the figure wire segments are shown. The meshes of a segment always refer to the size of the openings that permit the coal to drop through. The distance between any two spiders is referred to as the 1st set or row of segments, 2d set or row of segments, etc.; hence, by increasing the number of spiders the number of sets or rows of segments is increased. In speaking of a screen, reference is always made to the back end and front end; the back end refers to the end where the coal is fed to the screen, and the front end is the end where the coal that does not drop through the meshes is delivered. But in referring to the sets or rows of segments, it is customary to speak of the 1st, 2d, etc., set or row of segments, commencing to number from the back end towards the front end.

The segments are fastened to the rings *e* by six bolts, three at each end. As shown in the figure, the segments

are so arranged that the joint at any two, as *g*, will come in the center of a segment in another set or row as *h*. In this manner the screen as a whole is firmly bound together.

The jacket *b* is spoken of as the double or outside jacket. The meshes of the segments of this jacket are always smaller than those of the segments of the first jacket, or those directly under it.

The second or last row of segments *b* on the outside jacket is made quite different from any other of the segments shown.

A small opening from 6 inches to 9 inches is made in this segment, so that the coal that does not pass through the meshes of the segments composing the outside jacket can drop out before coming to the end of the set of segments *b*. This is done so as not to interfere with the coal that drops through the meshes in the set *a*.

The outside jacket is supported by pieces of gas-pipe *i*, which envelop the arms of the spider projecting through the circle of the first jacket. The circle for the first jacket over which the double jacket is located is supported by collars provided on the spider arms. That part of the arms which projects beyond the gas-pipe and outside circle is either riveted or threaded and fitted with a nut.

2833. Two methods of driving screens are in common use:

1. By bevel-gears on the screen shaft, usually at the front end of the screen.

2. By spur-gears on the periphery of the screen, at its back end, as shown in Fig. 1019. This large gear is always cast in one piece, and also contains the circles for the inside and outside jackets.

The pinion *j* is usually placed under the screen, and its shaft is always horizontal. This, of course, gives a greater bearing on one side of the teeth than on the other, and in time one side becomes greatly worn, while the other side is comparatively unworn. The pinion is then changed end for end.

The screen is supported at the back end by a hanger. The one shown is made up of three parts. The part *k* is bolted to one of the main stringers in the breaker. The part *l* contains a small saucer-shaped depression which supports a correspondingly shaped projection of the bearing *m*. The one fits into the other, thus allowing a free and easy movement for the screen shaft. The bearing contains two of these saucer-shaped projections, so that as it wears away it can be inverted. In many cases the parts *k* and *l* are cast in one piece, with an opening in the back, so that the bearing can be inserted.

The segments at the back end of the screen, or the end into which the coal is fed, have the smallest mesh, and those at the front end have the largest mesh. Wire segments make the finest separation of coal; but where water is used the wires soon slip, which increases the size of some meshes and decreases the size of others. Cast-iron segments are generally used for the steamboat and broken coal screens, while punched wrought-iron segments are used for the rice-coal screens, although in many instances the latter are used for all types of screens.

2834. The coal that enters the screen shown in Fig. 1019 contains every size below that of broken coal, which has first been separated by a broken-coal screen. The first two sets of segments remove the dirt, rice, buckwheat, pea, and chestnut. These sizes enter the double-jacketed part. All sizes below chestnut drop out of this jacketed part, while the chestnut comes out at the end and passes to a slate-picker screen, or to a screen known as the chestnut-coal screen, which is generally double-jacketed and carries a row of slate-picker segments. This screen is usually 4 feet in diameter, with an inclination of $\frac{3}{4}$ of an inch to the foot, and runs at the rate of 15 revolutions per minute. The double-jacketed part is used to take out the pea coal that may have remained in the chestnut. The slate-picker segments in this screen take out the flat slate. The chestnut coal coming out of the front end of the screen passes on either to a jig or to the coal pocket.

The coal that dropped through the meshes of this double jacket of the main screen passes on to a pea-coal screen. This is also a double-jacketed screen. The first jacket is usually 4 feet in diameter and the jacketed portion 4 feet 6 inches. This screen has usually a $\frac{3}{4}''$ to $\frac{7}{8}''$ pitch, and runs at the rate of 15 to 20 revolutions per minute. The pea coal comes out of the end of the first jacket, and what drops through the meshes is buckwheat, rice, and culm; the buckwheat comes out of the end of the double jacket, while the rice and culm pass through the meshes and are carried on to the rice-coal screen. The rice-coal screen is a single-jacketed screen, usually about 12 feet long, 4 feet in diameter, and has an inclination of $\frac{1}{2}$ inch to the foot; it runs at the rate of 13 revolutions per minute. The rice comes out of the end, while the culm passes through the meshes and out into the culm pocket. The chestnut, pea, and rice screens are usually run by bevel-gears on the screen shaft at the front end of the screen.

The coal that comes through the single-jacketed portion *a* of this main screen is known as stove coal, while that coming out of the end is egg coal. The stove coal is either carried to a set of jigs or run over inclined chutes, known as the **picking chutes,** the egg coal going through a similar operation.

2835. The meshes for the different segments used in the sizing of coal are given in the following table:

Culm passes through	$\frac{3}{16}$-inch mesh (round).		
Rice passes over	$\frac{3}{16}$-inch mesh and through	$\frac{3}{8}$-in.	sq.
Buckwheat passes over	$\frac{3}{8}$-inch mesh and through	$\frac{1}{2}$-in.	sq.
Pea passes over	$\frac{1}{2}$-inch mesh and through	$\frac{3}{4}$-in.	sq.
Chestnut passes over	$\frac{3}{4}$-inch mesh and through	$1\frac{3}{8}$-in.	sq.
Stove passes over	$1\frac{3}{8}$-inch mesh and through	2-in.	sq.
Egg passes over	2-inch mesh and through	$2\frac{3}{4}$-in.	sq.
Broken passes over	$2\frac{3}{4}$-inch mesh and through	$3\frac{1}{2}$-in.	sq.
Steamboat passes over	$3\frac{1}{2}$-inch mesh and out end of screen.		

Lump passes over platform bars that are set from $3\frac{1}{2}$ to 5 inches apart.

2836. In Fig. 1020 *A* and *B* show a cross-section and side view of the part of a main screen where a wooden shaft *a* is used.

From this figure it is seen that the parts *c* and *d* of the spider are made of wrought iron and in one piece. The screen circle *b* is made in one piece and joined by bolting, as shown at *h*. The screen circle *b* is secured to the spider arms *d* either by riveting, as shown in the figure, or by bolting.

The spiders are secured to the screen shaft *a* by a series of wedges driven between the shaft *a* and the web part *c* of the

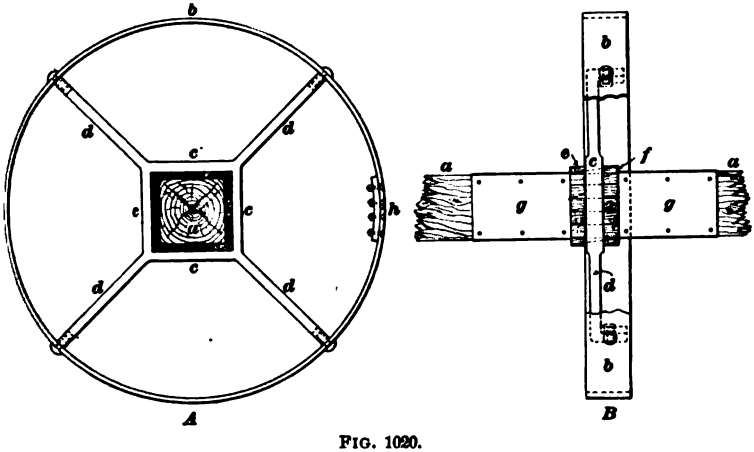

FIG. 1020.

spider. These wedges are single tapered wedges, made of oak or yellow pine, and are driven, as shown in the figure, from *e* and *f*, so that one overlaps the other.

To prevent the screen shaft *a* from wearing out by the continual striking of the coal, it is covered either with light sheet iron *g*, or ¾-inch oak boards. The shaft *a* is generally either white or yellow pine timber, 14 inches × 14 inches in cross-section. The bearings at the front and back end of the screen are specially designed cast-iron pieces, called the **screen's gudgeon.** These gudgeons are fastened to the wooden shaft by a number of large bolts passing through it.

2837. Fig. 1021 shows a **Phoenix column shaft,** which is fast taking the place of the wooden shaft for main

screens, and also the wrought and cast iron shafts for the smaller screens. As shown in the figure, the end bushings are of cast iron, and are riveted in place to the Phœnix column, making a very substantial piece of work. These shafts are very light for their strength, and serve their purpose

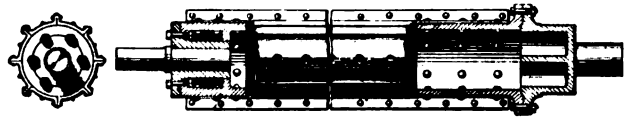

FIG. 1021.

admirably. The spiders used on these shafts are a cast-iron hub with wrought-iron arms, fastened to the shaft by set screws.

2838. The **steamboat screens** are usually from 4 feet to 6 feet in diameter, and never more than 6 feet to 12 feet in length. They have an inclination of ¾ inch to the foot, and are run from 10 to 13 revolutions per minute. The screen shafts are wrought iron and solid throughout. The spiders in this screen are cast iron, in one piece, and are keyed to the shaft. The segments are cast iron. This screen takes the coal as it comes from the main rolls or crushers. Both methods in use for driving screens are used to drive this screen, although the spur-gearing on the periphery of the screen and small pinion is used almost exclusively. In many cases the screens are double-jacketed, the outside jacket permitting the sizes below broken to pass through, the broken coming out of the end.

2839. The **broken-coal screen** is a screen that is very rarely double-jacketed. It is from 4 feet to 6 feet in diameter, usually from 9 feet to 12 feet in length, with an inclination of ¾ inch to the foot, and is run 10 to 13 revolutions per minute. The segments used on this screen are either cast iron, wire, or punched wrought iron. It is usually driven by the large periphery spur-gear and pinion, in preference to bevel-gears. It takes the coal as it comes from the prepared rolls, often called the monkey rolls.

2840. For cleaning the very smallest sizes of coal, as pea, buckwheat, and rice, a **pentagonal screen** is often used; that is, the screens, instead of being circular, are in the form of a pentagon. These screens have about the same dimensions as the circular screens, but run at a very much higher speed, varying from 30 to 35 revolutions per minute. This form is used to give the coal a greater stirring up. They are always single-jacketed, and are used solely to get rid of the dirt.

2841. When the coal is wet and dirty, washing is necessary to remove the dirt that adheres to each fragment. This is accomplished by a series of small streams or jets of water falling upon the coal in the screens from a perforated pipe or trough above the screen. Or, the trough is set level and the water is fed into it from below from a tank which is so located as to give a certain amount of head to the water, causing a uniform overflow throughout the whole length of the trough. This washing is quite necessary to enable the slate pickers to distinguish the slate and bone, and at the same time it makes the coal more salable.

In order that the screens may do their proper sizing, they should not be overcrowded; for when they are crowded with coal a considerable quantity of one size becomes mixed with that of another. To overcome this, some breakers have automatic screen feeders.

2842. The **capacity of screens** depends upon the amount of screening surface, the inclination, and the speed at which they are run. Increasing the pitch has the same effect on the screening as shortening the screen, but it increases instead of diminishes its capacity. Hence, the screening capacity in large breakers is increased by increasing the pitch of the screens, although to secure thorough screening very long screens are necessary, while at breakers handling a small output the screening may be equally well done by short screens with a very small inclination.

To give some idea of the capacity of screens, the following are the results of tests made in the anthracite region. The

first was that of a main screen (dry) with ¾-inch pitch, 18 feet long. The first jacket was 5 feet in diameter. It also contained a jacket for chestnut, 6½ feet in diameter and 7½ feet in length. The screen was run at a speed of 10 revolutions per minute. The meshes for the outside jacket were ¾ inch. The first jacket had 8 feet of 1⅜-inch meshes, while the remainder was made of 2-inch meshes. The amount of egg coal that came out the end was six tons per hour; the amount of stove coal, ten tons per hour, and of chestnut, nine tons per hour.

The next test was that of a pea-coal screen 4 feet in diameter, 12 feet long, ¾-inch pitch, and running at the rate of 14 revolutions per minute. The screen was a wet one and supplied with an abundance of water. The meshes in the first jacket were ½ inch square. The buckwheat passed over a ⅜-inch mesh and the rice over a ⅛-inch mesh, punched plates being used throughout. Eight tons of pea coal per hour came out the end of the first jacket, and the amount passed through the first jacket was five tons of buckwheat and ten tons of rice coal. The above was calculated at 2,240 pounds to the ton. On account of the water, it was found very difficult to get the amount of culm.

Three tests were made of the above screen, and gave 6, 8, and 10 tons per hour, respectively, of pea coal. It was found that 8 tons per hour was about all the screen could size, for when tested for 10 tons it was quite impossible to size the buckwheat.

2843. In another type of movable screens the screening surface is approximately horizontal, and the motion and action is similar to that of an ordinary hand sieve. Such a screen is shown in Fig. 1022, and is known as the **shaking screen,** or **shaker.** This type of screen is used for sizing small coals; the one shown in the figure being made for sizing pea, buckwheat, and rice.

This screen is moved backwards and forwards by means of the eccentrics, as shown. This motion, combined with the inclination of the screen, causes the coal which is fed on

the highest part of the screen to travel gradually across it. Pea, which is the coarsest coal, comes off first, at *A*; buckwheat second, at *B*; the rice coal coming out over the

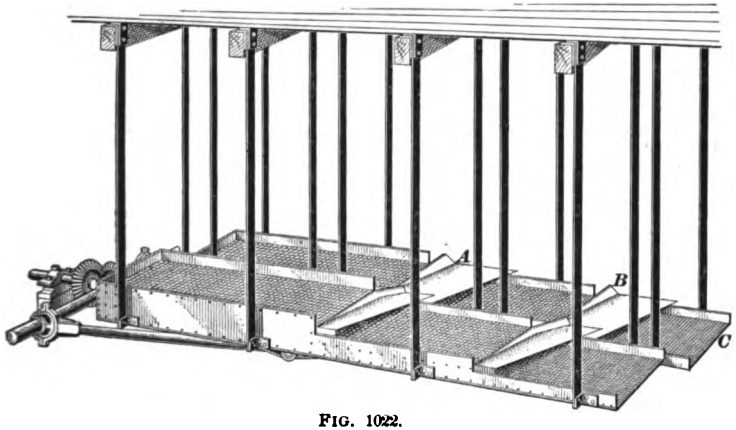

FIG. 1022.

end *C*, while the culm passes through the meshes in the bottom.

2844. The shaking, pentagonal, and circular screens work very well for the smaller sizes of coal, where they are comparatively dry, but where they are wet it is very difficult to get out the dirt and make a complete separation. To overcome this a machine has been invented which is known as the **Righter coal washer and separator,** and which is shown in Fig. 1023. Its main feature is a screen box *a*, provided with perforated plates upon both top and bottom, and it has also a slate pocket *b* near its lower end. The screen box is submerged in water and is inclined towards the coal elevator *c*. This screen box is given an up-and-down motion and at the same time a backward-and-forward motion by means of the different eccentrics used, which are driven by the bevel-gearing, as shown.

The coal is fed into the screen box at its upper end *d*, and the motion of the screen box, aided by its downward inclination, causes the coal and slate to work forward; the slate being heavier is deposited in the slate pocket, while the

coal is carried and delivered to the elevator *c*, where it is discharged into a chute, which leads either to a pocket or to a sizing screen. The slide in the bottom of the slate pocket *b* is opened from time to time, as shown, by means of the rods and levers. The bottom of the tank is inclined, which

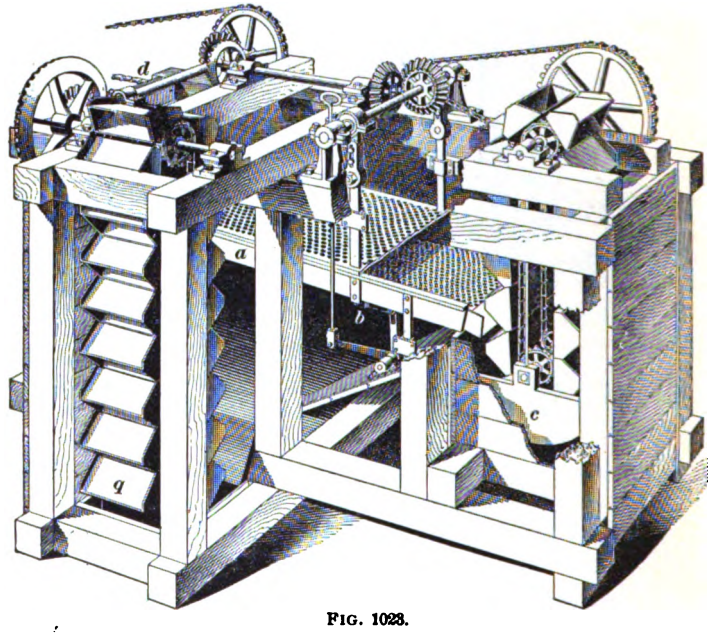

FIG. 1023.

allows the slate and mud to pass very readily to the elevator *q* which removes it.

2845. Another method that is used for cleaning the smaller coals before sizing is shown in Fig. 1024, which consists of a water-tight tank *a*, filled with water to the line marked *b*. The tank is closed at the top by the perforated plate *c*, having holes to suit the smallest size of coal to be separated. The plate *c* extends up the inclined chute *d*, so as to permit the drainings to get back into the tank *a*. An endless conveyor *e* is used to drag the mingled coal and dirt over the plate *c* and up the inclined chute *d*. The culm containing the coal to be washed is supplied by the chute *f*.

This culm falls into the water, is moved along and thoroughly stirred up and tumbled over and over upon the perforated plate *c* by the conveyor. In this operation the fine dirt sinks through the perforations and falls into the bottom of the tank, while the coal is thoroughly washed and moved

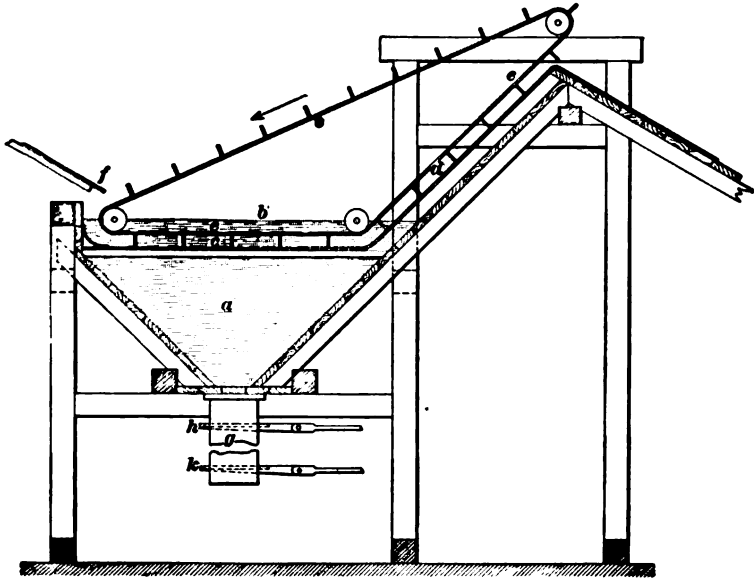

FIG. 1024.

along the bottom and up the inclined chute *d*, to be delivered to screens or other receptacles, as may be desired. The dirt which accumulates in the bottom of the tank is discharged by means of the slush box *g*, which has two wedge-shaped slides *h* and *k*. Upon the upper surface of the slide is a piece of oak wood. The slides move in a casting which has on each side a taper groove, whose wedging action furnishes a water-tight joint.

The discharging is performed by the first opening *h*, *k* remaining closed; the fine mud that was above *h* is then lowered to *k*; *h* is then closed and *k* opened, which discharges the waste without letting the water out of the tank.

2846. Gyrating Screens.—Another type of movable screen in use at some of the collieries in the anthracite region is known as the **gyrating screen.** This screen receives a gyrating motion like the motion a molder gives to his sieve when screening his sand.

The great advantage claimed for this type of screen is that the whole surface of the screen is constantly in action, while in the revolving screen of say 5 feet in diameter only about 8 inches of the 16 feet circumference is at any time in action, unless the screen is overcrowded; the revolving of the screen acts like an elevator, and tends to throw the coal back into the screen.

2847. Fig. 1025 shows a single gyrating screen, which is made of two parts: the upper or screen box and the lower or box bed-plate. The screen box is made up of shelves, varying in number from 2 to 6, depending upon the size of material to be screened. The box is 4 feet wide and 6 feet long, inside measurements, giving 24 square feet of screen surface per shelf. The boxes are made from 1 foot to 2 feet deep. The smaller the size of coal the closer to each other the shelves can be put.

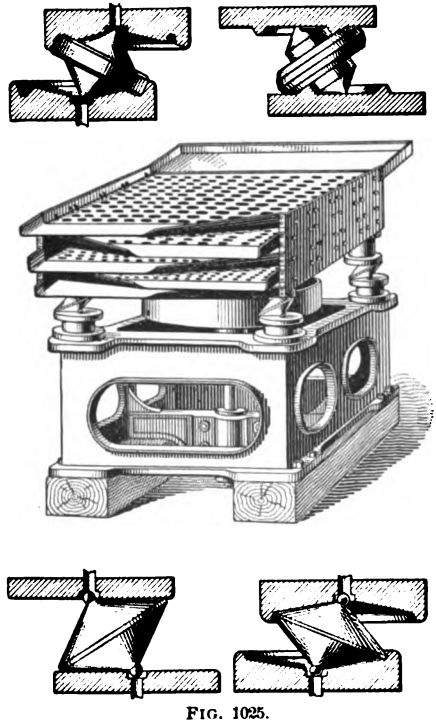

FIG. 1025.

On the shaft shown in the bed-plate a pulley is placed to drive the screen. The large wheel shown between the screen box and the bed-plate is counterweighted, to balance the centrifugal force of

the screen box. Above this wheel is a crank to drive the screen box. As shown in the figure, the screen box rests on four double cones, which are supported by the box bed-plate. The cones roll freely in a prescribed path, and the guiding of the cone is done by ball-and-socket joints at the two points of the cone, as shown in the two lower views, or by one of the two arrangements shown in the two upper figures.

These screens run from 140 to 145 gyrations per minute. The coal is fed at the top of the screen box; the smaller sizes drop through the openings, allowing the larger coals to come off first.

There is no clogging of the holes, as would at first seem likely. The circular form of the holes and the tendency of the pieces of coal to move in a small circle cause the holes to clear themselves without difficulty.

MACHINERY FOR BREAKING THE COAL.

2848. For breaking up the coal two methods are used. The one already referred to, and known at the mines as *chipping*, is where the lumps are large and the pieces of slate attached to them are of such a character as to render it economical. The larger lumps are broken by hand, the men using picks made for that purpose; but by far the larger portion of the breaking is done by **rolls.**

2849. The rolls used in breaking coal are of three kinds: (1) those with pointed teeth; (2) those with the continuous teeth, known as the **corrugated rolls,** and (3) those known as the **saucer rolls,** where the teeth are in the shape of knife-blades.

The coal is generally broken by two or three sets of rolls, as follows:

1. The main rolls or crushers, often called the lump-coal rolls.
2. The prepared-coal rolls, often called the monkey or pony rolls.
3. The bony-coal rolls, used to break up the bony coal.

Some collieries, however, have rolls for breaking lump into

steamer, another for breaking steamer into broken, another for breaking broken into egg, another for breaking egg into stove, a fifth for breaking stove into chestnut, and a sixth for breaking chestnut into pea coal.

2850. In the above operation all sizes are made below the size which is being broken, yet the most economical method is to break any size as nearly as possible into the size immediately below it; in other words, it is more economical to break lump as far as possible into steamer, then break steamer as far as possible into broken, then broken into egg, and so on, each time taking out all the coal below the size to be broken before passing that size through the rolls.

2851. The **main rolls,** or **crushers,** are generally located underneath the main platform. All the coal that does not fall through the main bars is either made into lump coal or passed through the main rolls. Here it is crushed and passes out into the steamboat screen, where the steamboat-coal is taken out.

Fig. 1026 shows the plan *a* and side view *b* of a set of main rolls, or crushers, with pointed teeth. These rolls are plain

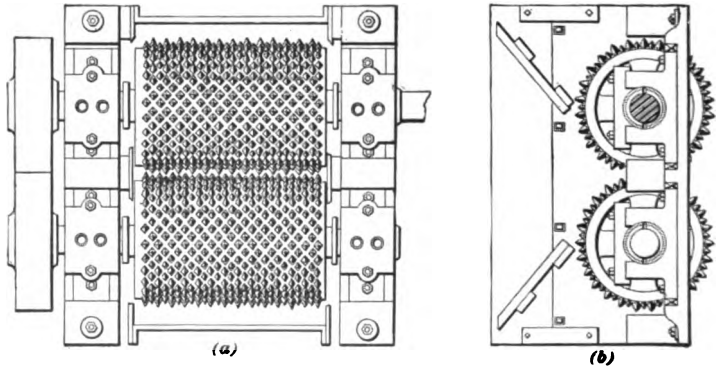

FIG. 1026.

cylinders, made either of cast iron or steel casting, with hubs bored and key-seated to receive the shafts.

Formerly the rolls consisted, as they do at many collieries yet, of four cast-iron spiders, two on each shaft. These

spiders are keyed to the shaft and covered with from three to four cast-iron segments, which are bolted to the spiders, each segment having four bolts, two at each end; the teeth are usually the pyramidal form, cast in with the segment. The great trouble with this kind of a roll is that when one or more teeth break off from a segment, it is necessary to throw the whole segment away, it having become useless. However, these segments are an improvement on the old style of rolls that were cast solid.

The latest improvement in rolls is where the teeth are made of steel and inserted in either a cast-iron or steel cylinder, as shown in Fig. 1026. The cylinders are turned in a lathe and the holes are then drilled and reamed to receive the steel teeth. These teeth are made so that they can be removed from the cylinder and sharpened, or new ones inserted.

2852. The steel roller teeth *A* and *B*, Fig. 1027, show the latest types used for anthracite-coal rolls.

The type *A* is known as the **pyramidal tooth.** Teeth of this type are made in different sizes and numbered. When the pyramidal part of the tooth extends beyond the cylinder 2¾ inches, the curved part is 2⅜ inches long, and 1¼ inches wide at the bottom. The part *a* of this tooth projects beyond the cylinder, or shell, of the rolls and aids in the extraction of the tooth after it has become worn.

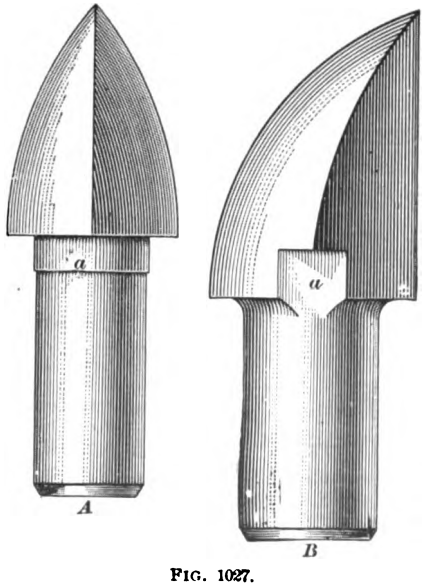

FIG. 1027.

The type *B* is known as the **hawk bill tooth.** Instead of having the front edge of the tooth bent near the point, it is straight. This type of tooth is four-sided, having the back

of the tooth curved, so that the points of the teeth strike the lumps and draw them into the rolls, splitting them at the same time. These teeth are also made in different sizes and numbered.

Two flat places *a* are provided on this tooth to take hold of when it becomes necessary to extract it.

2853. The bore of the main breaker rolls is generally 8 inches, and the shafts are of wrought iron. The diameter of the fly-wheel and belt pulley and length of driving-shaft are made to meet the requirements of the driving power, as the speed at the points of the roller teeth should be about 1,000 feet per minute. The average sizes of these rolls are from 2 feet 9 inches to 3 feet 6 inches in diameter, and from 3 to 4 feet long. There are five pedestals, only four, however, being shown in Fig. 1026, and they are generally lined with babbitt metal.

The pedestals rest on cast beds, which are provided with adjusting keys, so that the rolls can be set farther apart or closer together, to increase or decrease the quantity of the larger sizes of coal. The teeth of the spur-gears for driving the rolls are usually 3½-inch pitch and 8-inch face. The holding-down bolts are 1½ inches in diameter, and of a length to suit the timbers for which they are used. The rolls, as shown, are enclosed by a cast-iron casing called a **hopper,** so arranged that it can be very readily taken apart.

The larger sizes of coal drop through the meshes of the steamboat screens. The over-supply of steamboat-coal for market and the coal that comes out of the end of the mud screens is run into a pair of rolls known as the prepared-coal rolls, or monkey rolls.

2854. Prepared-coal rolls differ only in dimensions from the main rolls. The usual bore of the prepared-coal rolls is 5¾ inches.

The diameter of the fly-wheel and belt pulley and the length of driving-shaft are made to meet the requirements of the driving power, as the speed at the points of the roller teeth should be about 1,000 ft. per minute.

The teeth of the spur-gearing for driving these rolls are usually 3½-inch pitch and 7-inch face.

These rolls are generally 19 inches in diameter and 29 inches long.

2855. Bony-Coal Rolls.—These rolls are similar in construction to the main and prepared-coal rolls, although of a much smaller size than either, and are used to break up the bony coal that comes from the pickings of broken, egg, and stove coal. They are run at a much higher speed than the main and monkey rolls, the speed at the points of the roller teeth varying from 1,300 to 1,800 feet per minute.

2856. Corrugated Rolls.—Fig. 1028 shows the plan and side view of a set of adjustable corrugated lump-coal and steamboat rolls.

These rolls differ from those already described in the form of their teeth *a*, which are continuous from one end to the other. There are no points. The ends of the teeth are slightly rounded, and the parts doing the work are cast in chills, so as to give greater endurance. The teeth are cast in one piece with the body *b* and hubs *c* of the roll. The hubs are bored and key-seated to receive the shaft *d*. There are different sizes of teeth, according to the size of the coal that is to be made, and also according to whether the rolls are fixed or adjustable.

2857. By **fixed rolls** are meant those that are arranged to break the sizes successively. In such a case it is not necessary to change the distance between the centers of the shafts of the rolls after the proper distance for most economical breaking has once been determined.

The rolls shown in Fig. 1028 have an arrangement for changing the distance between them while they are running. When this change is great, it is necessary to use gear-wheels of greater or smaller diameter.

From the side view, it will be noticed the pedestals *e* are made so as to remain stationary. The frames *f* carrying the bearings for the right roll are planed and rest on cast beds *g*

which contain planed grooves, as shown in the section *A B*, for the correspondingly planed surfaces of *f* to work in. The frames *f* also carry the square nuts *h* on the short bevel-wheel shafts *i*. The bevel-gearing on these shafts gears

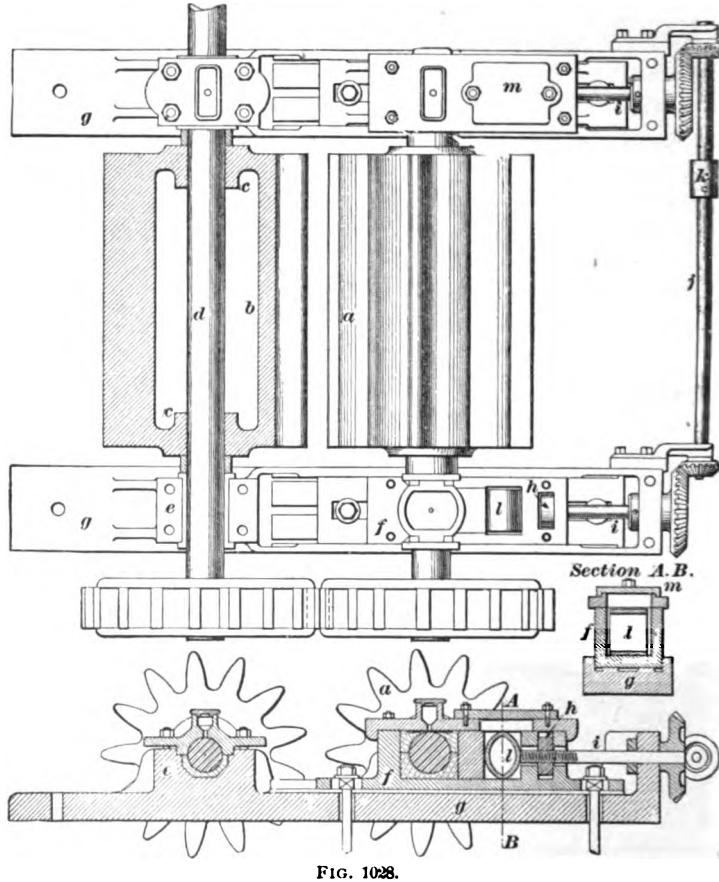

FIG. 1028.

with that of *j*, so that by inserting a bar in the hole *k* the right-hand roll can be moved back and forth.

2858. These figures also show a safety device by which breakage of either the teeth, rolls, or gearing is prevented when the rolls draw in material too hard to crush.

The part supporting the bearings rests against an elliptical shell of cast iron *l* inserted in the rectangular opening, as shown in the figure. This elliptical shell is made thick enough to withstand a thrust of several tons, but if subjected to a greater pressure it breaks and allows the rolls to slide farther apart, thus relieving them of all strain. This cast-iron shell is quickly replaced by removing the cap *m*, covering the box in which it is placed. This safety device and form of gearing, by which the distance between the two rolls can be varied at any time, is also used on rolls with pointed teeth.

The **lump-coal rolls** are usually made 26 inches in diameter from tip to tip of teeth, 3 feet long, with 14 teeth. The gearing for these is the same as that used for the pointed-tooth roll.

2859. Corrugated Rolls for Broken Coal.—The diameter of the shaft used is 4½ inches, and of the rolls 16 inches; the length of the rolls is 3 feet, and the number of teeth 20. These rolls are usually run about 205 revolutions per minute. The result sought by the corrugated rolls is to break the lump into two pieces of nearly the same size, and for this reason this type of roll is used to break the one size as nearly as possible into the next size below.

2860. Taper rolls are a modification of the corrugated rolls just described, and are used when a small quantity of a number of different sizes is to be broken up at once. At the upper or larger end the rolls will take steamboat; a little farther from the end they will take broken; a little farther, egg, and still farther, stove. When the coal to be broken up is of different sizes and the quantity not large, these rolls may be economical.

2861. Saucer Rolls.—Fig. 1029 shows the plan and side view of a set of saucer rolls. There are very few rolls of this type in use, but where they are used they are applied principally to break up the bony coal. As shown in the

figure, they are made up of two saucer-shaped parts, *a* and *b*, which are keyed to the shafts *c* and *d*. To these shafts are also keyed the belt wheels *e* and *f*, which are used to turn *a* and *b* in opposite directions. The parts *a* and *b* are drilled so as to receive the teeth, which are in the form of a knife-blade, made of steel and bolted to *a* and *b*. The part *g*, be-

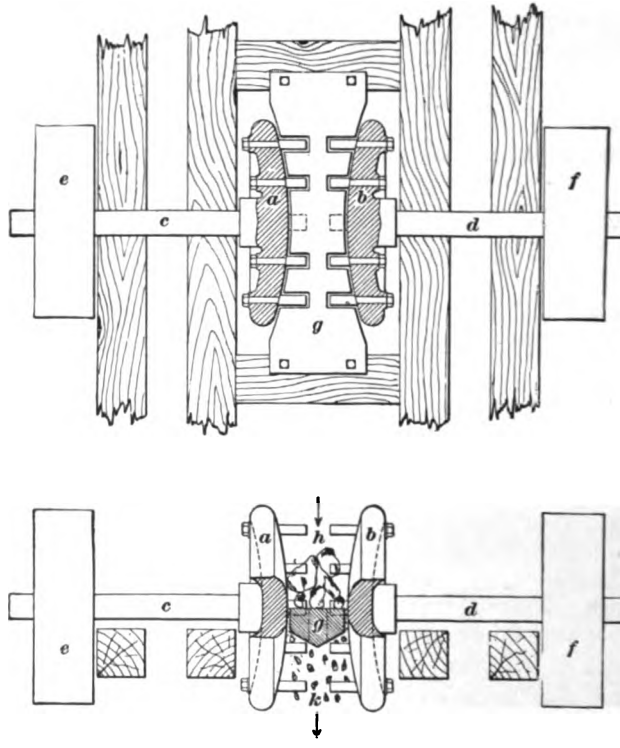

FIG. 1029.

tween the saucer-shaped parts, is known as the breaking block. It is made of cast iron, and has openings on each side to allow the teeth to pass. The coal is fed on the block *g*, as shown by the arrow *h*, and broken by the teeth as they cover the holes. The coal is delivered, as shown by the arrow *k*, to the hopper located underneath the rolls.

MACHINERY FOR SEPARATING THE SLATE FROM THE COAL.

2862. One of the oldest methods of separating the slate from the coal, and which is still in use, is by hand-picking. The coal and slate are allowed to slide down an inclined chute, along one or both sides of which boys and old men too feeble to perform hard labor are seated; or, in many cases, the slate picker sits astride the chute on a board seat and controls the flow of the coal with his feet. There are several objections to this method. When a large quantity of coal is passing, the slate picker can really pick out only the slate on top, much slate being hidden. Another objection is, one and the same piece of coal having a slaty appearance may be picked up by each slate picker in succession and returned to the chute. For these reasons, different types of picking chutes have been introduced.

As already explained, on account of the way the coal and slate break up, together with the different velocities with which they slide down an inclined chute, numerous automatic slate pickers have been invented. The slate-picker screen, which has already been described, is among the first and the best.

2863. The picker shown in Fig. 1030 is known as the **Houser slate picker,** and consists of a number of separating bars *a*, as shown in the top view *A* and the side elevation *B*. These bars are 4½ feet long, and taper from 1⅛ inches to ¾ of an inch. They are spaced to suit the size of the coal to be handled, and are placed one above the other. The one below is set so as to be in the center of the space of the two above, as shown in the top view *A*. A punched corrugated plate *b* is placed at the upper end of the bars. The holes in it let the fine dirt through. The corrugations are V-shaped and quite deep. At the lower end of the bars are adjustable plates *d* and *c*, so arranged as to catch the coal which drops off the ends of the bars.

The coal to be cleaned is received from the screens upon the inclined plate *e*, from which it slides down over the corrugated plate *b* to the separating bars *a*.

As the coal and slate pass over the corrugated plate the slate is turned up on its edge, is fed into one of the spaces between the bars, and meets with a greater resistance as it moves along than the coal; consequently, the coal jumps farther beyond the end of the bars than the slate does. The

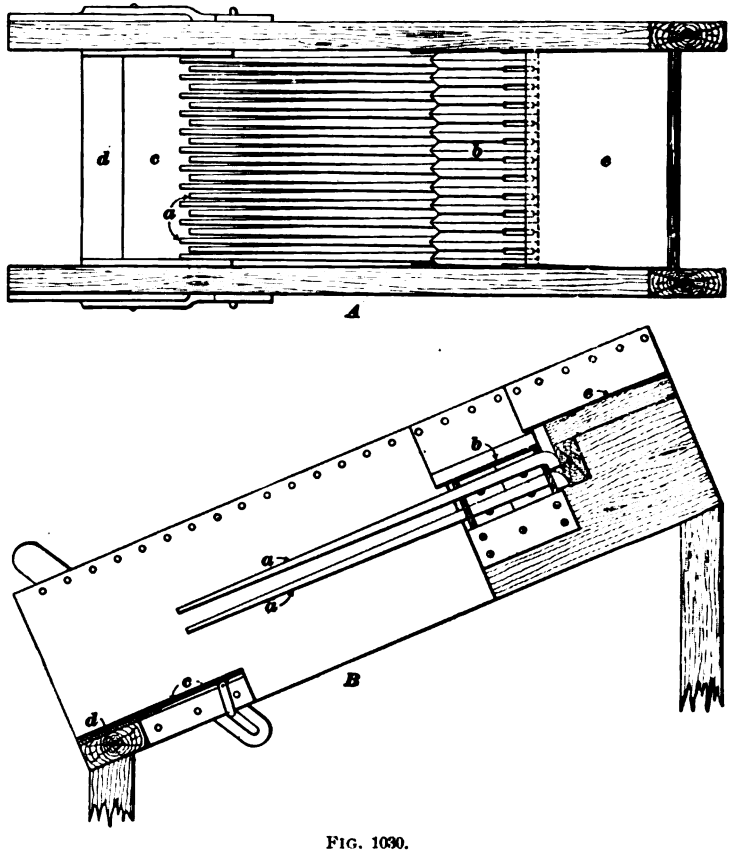

FIG. 1030.

slide *c* is then adjusted to catch the coal and miss the slate which has not dropped through the spaces between the bars.

2864. Fig. 1031 shows a sectional side elevation *A* and a top view *B* of the **Herring separator,** which consists essentially of the feed wheel *a*, the adjustable chute *b*, and

the adjustable plate *c*. The feed wheel *a* is adjustable vertically, that is, it can be raised or lowered, and is driven by a belt which runs on the pulley *d*. The adjustable chute *b* is hinged at *e*, and can receive different degrees of inclination by means of the pin *f*.

As shown in *A*, the chute *b* has the different inclined plates *g*, *h*, *i*, and *j*. The plate *g* is set upon a pitch of 8 inches to the foot; the plate *h* at 5½ inches; the plate *i* at still less, and the plate *j* at 2 inches. The plate *c* is so arranged that

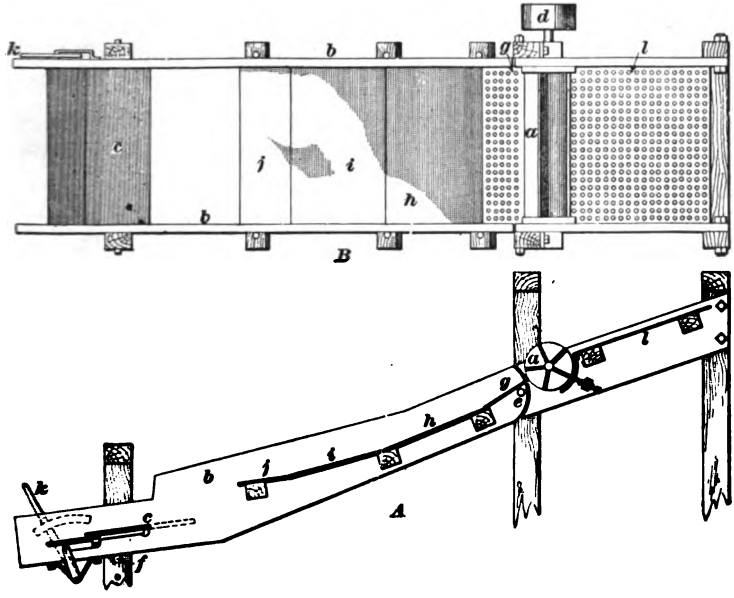

FIG. 1031.

it can be moved back and forth by the lever *k*, so as to adjust the opening for the slate to drop into.

The mixture of coal and slate coming from the screen is received upon the perforated plate *l*, from which it passes to the feed wheel *a*. This wheel delivers the coal and slate in irregular quantities to the inclined chute *b*, down which it slides with a velocity proportional to its frictional resistance, the slate sliding much slower than the coal. The coal acquires sufficient velocity to jump the gap between the

plate *j* and the adjustable plate *c*, while the slate meets with greater resistance and moves with less speed; consequently, the slate falls short of the plate *c*, and drops into the opening which leads to the slate hopper.

2865. Another method very similar to the one just described, and which has been previously referred to, is where the coal and slate are allowed to slide down a chute in which is located a sandstone slab which is rougher than the ordinary chute plate. There is a gap at the end of the slab, over which the coal jumps by virtue of the greater velocity acquired in sliding down the chute, while the slate, moving at a much less velocity, drops into the opening.

2866. Coal Jigs.—All the above methods of separation are used where the coal is comparatively dry. Where the coal is wet and dirty as it comes from the mines, what is known as **jigging** is resorted to.

In jigging, the result is twofold; it washes the coal and separates the slate from the coal.

The separation is due to the difference in the specific gravities of the coal and the slate. The average specific gravity of anthracite coal is 1.473, while the average specific gravity of slate is about 2.5.

The coal and slate are fed into water-tight tanks. Certain laws govern the fall of bodies in water, and in order to apply these laws an arrangement is adopted whereby the particles are repeatedly brought into suspension and allowed to drop again; in other words, a series of blows must be imparted whose magnitude must diminish with the size of the particles. The machine used for this purpose is known as the **jig.**

In the anthracite region two types of coal jigs are in use:

1. The piston jig, with fixed perforated plate bottom.
2. The movable pan, with perforated bottom.

2867. To secure a complete separation of the refuse from the coal in either of the above types of jigs, it is absolutely necessary (1) to have the material to be jigged of uniform size and shape, and (2) to feed the jigs slowly and regularly.

Before being jigged the coal is separated into the various commercial sizes: egg, stove, chestnut, pea, and buckwheat. The sizes above and below these are never jigged.

Screening does not produce a uniform size, for anthracite coal breaks into fragments of almost every conceivable shape, and in any standard size there are pieces that weigh three or four times as much as the smallest pieces. It therefore follows that sizing by screening does not altogether satisfy the first requirement. Again, since much of the slate occurs in flat pieces, they are easily buoyed up by the water and pass over with the coal. Jigging coal in the anthracite region is rarely a cheap process. At a large number of mines the coal must be washed and jigged with mine water that is strongly acid; and the parts of the machinery exposed to the action of this water are rapidly corroded, so that repairs are constantly needed. The cost of jigging coal is, therefore, greatly increased by the necessity of using mine water. In many cases, however, the washed product is more readily salable than the unwashed.

2868. Fig. 1032 shows a side view *A* and plan *B* of a **piston jig.** This jig is a modification of a number of jigs in use, and consists of a water-tight tank divided by the cast-iron partition *a* into two compartments *b* and *c* of unequal size. The tank is lined with tongued and grooved floor boards and the compartments *b* and *c* with iron plates. The bottom of the larger compartment *b* is slightly inclined towards or away from the slate-discharge gate, usually $\frac{3}{4}$ of an inch to the foot, and covered with a perforated plate *d*, supported by the bar *e* in the center, and by supports bolted to the side. The size of the openings in the plate depends upon the size of the coal to be jigged; usually the openings are circular, although for the larger sizes oblong openings are sometimes used, having the longest dimension of the opening in the direction in which the coal moves.

The coal is fed upon the perforated plate *d* at *f*, the inward flow being regulated by the adjustable plate *g*, which is put with its lower end as near the bottom of the jig as is consistent with a free discharge of the coal to be jigged.

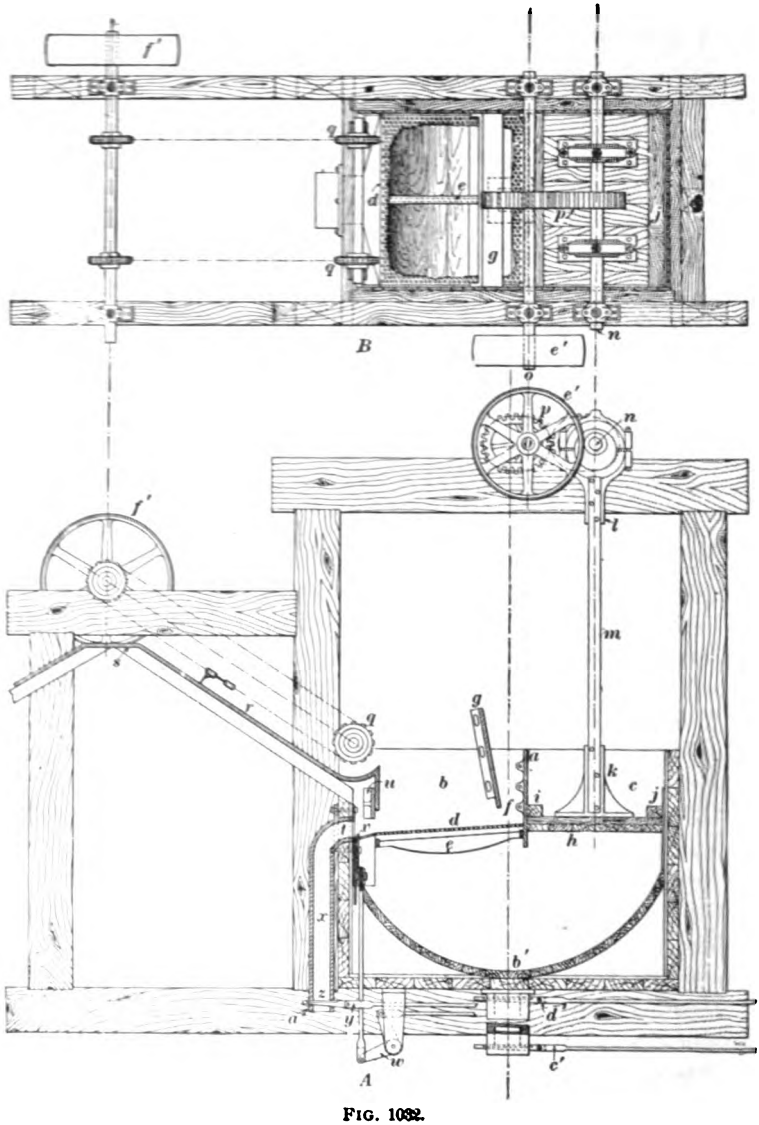

FIG. 1032.

The smaller compartment *c*, which is less than half the size of the first, communicates with it across its whole width at the bottom, and serves as a working barrel for a floating piston *h*. To guide the water from the piston to the jig, a semicircular row of planks is put in. These need not be absolutely water-tight, as they are intended simply to direct the current.

The piston *h* consists of a double row of planks placed as shown in the side view *A*, which are either nailed or bolted to the parts *i* and *j*. The lower part *k* of the piston-rod is made of cast iron and bolted to *h*, and is connected to the upper part *l* by means of a 3″ × 4″ oak piece *m*.

The piston receives its motion from cams keyed to the revolving shaft *n*, which is geared to the driving-shaft *o* by means of the elliptical gear *p*.

The object of this gear is to force the piston rapidly down, thereby lifting the coal quickly and allowing it to settle slowly, for the upward motion of the piston is at a much less speed than the downward. In using a single pair of elliptical gears for a quick return, it is well not to have the ratio of the forward motion to the return greater than 1 : 3.

The coal, in rising on the downward motion of the piston, is skimmed off by a series of flat strips of iron carried on two rows of Ewart link-belt chain running over *q*.

As the coal is scraped up the incline *r*, the water drains back. The top *s* of the inclined plane *r*, which inclines slightly towards the jig, is flat and covered with iron. The coal here forms a pile, and the water drains from it back to the jig. As each successive quantity of coal is brought by the flights on the chain, it pushes a corresponding quantity, which has been drained, off the other side *o* down the chute, where it goes either to the picking chute to be picked or directly to the pocket, if it is (as in the case of small sizes) already clean enough. The slate, being heavier than the coal, falls to the bottom and is discharged through the opening *t*. This opening is regulated by elevating or depressing the plate *u*, which is so arranged as to allow the largest pieces of slate to pass under it. The gate *v* generally remains

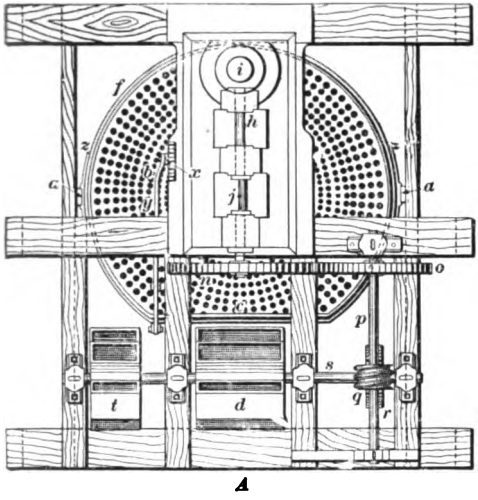

FIG. 1033.

open, but can be closed by the lever attached to the bell-crank *w*. Outside of this is a cast-iron flat pipe, or slate hopper, *x*, which is closed by the wedge-shaped slide *y*, upon the upper surface of which is a piece of oak *z*. The slide *y* moves in a casting *a'*, which has a tapered groove on each side. When the slide *y* is pushed through the opening in *a'*, the wedging action of the taper grooves forces the wood against the face of *a'*. This makes an excellent gate for closing the hopper, allowing neither water nor slate to escape.

The gate *v* is closed by forcing it up in the frame. This cuts off both the water and slate from the hopper *x*. When this has been done *y* is drawn out, the water and slate drop out, and whatever coal may have come with the slate is picked out. The slate is then run either directly to the slate hopper by means of a chute, or conveyed away by an elevator or system of drags.

At *b'* there is an arrangement known as the **slush box,** which lets out the slime and fine coal which accumulate in the bottom of the jig. This is arranged so as not to let out too much water at one time. The gates *c'* and *d'* are similar to the gate *y* on the slate hopper *x*, so that by keeping *c'* closed and opening *d'* a certain quantity of the deposit moves down upon *c'*; *d'* is then closed and *c'* opened, which allows this certain quantity to escape.

The jig pulleys *e'* and *f'* are driven by pulleys from a line shaft in the breaker, and are of such dimensions as to give the proper speed to the piston and the line of scrapers.

2869. Fig. 1033 shows the plan *A*, the side view *B*, and the end view *C* of a jig with a **movable pan having a perforated bottom.** The action of this jig is the same as the one already described, for in every case the object desired is to produce an upward current. The whole pan in this case acts as a piston.

From *A*, *B*, and *C*, it will be noticed that this jig is a water-tight tank. This tank occupies a space 8 feet × 8 feet × 8 feet, equal to an 8-foot cube, and is made of 2½-inch white-pine plank, with braces 5 inches × 6 inches, standards 8

inches × 8 inches, sills 6 inches × 8 inches, top caps 8 inches × 12 inches, all of white pine, making it amply strong and durable. Within the tank is the jig pan *b*. This pan, as shown, is made almost in the form of a complete circle, except at *c*, where the coal passes through the opening in the front of the pan down into the coal elevator *d*. From the side view *B*, it will be noticed that the jig pan *b* is made so as to be slightly inclined towards the coal elevator *d*. This allows the slate that accumulates in the bottom of the pan to move towards the discharge gate *e*, and the coal to overflow at *c*.

The pan in many cases is cast in one piece, but where mine water is used in the jig tank it does not take long for the circular holes to become so enlarged as to make the entire pan worthless. To overcome this, the bottom is made of a number of plates which are bolted to ribs that radiate from the center. These plates, after they are worn out, can be very readily replaced by new ones. From *A* and *B*, it is seen that the pan *b* is made up of two parts.

The sides of the pan proper are cast in one piece with the bottom, having the slate pocket, with gate *e*, bolted to the bottom; the height of the sides is shown by the dotted line in view *B*. The pan proper is surrounded by a heavy piece of sheet iron *f*, which is bolted to the pan as shown in *A*; this is used to prevent the coal from escaping over the rim of the pan.

To keep the pan in position in its up-and-down motion, the shoes *z*, which move up and down on the guides *a*, are bolted to the pan on each side.

The pan, or piston, *b* is suspended in the tank from the line shaft *h* of the small engine *i* at *j*. This engine, which is vertical, has a 6-inch cylinder and 8-inch stroke. The idea of using a separate engine for a jig is to give the person who is operating the jig complete control over it in its separation of slate from the coal, no matter how fast or how slow the coal is passing through the breaker. If the breaker is pressed with a large quantity of coal, the speed of the machinery is naturally slackened, and a jig running with

belting and gearing has its speed also slackened just at a time when the jig should be run fast, to secure perfect separation and do its work properly.

As shown at *j*, the engine shaft is made so as to act as an eccentric. The side view *B* shows how the pole *k* of the pan is coupled to the shaft *h* of the engine *i*. The connecting-rod *l*, which is bolted to the engine shaft, is joined to the pole *k* of the pan by the pin *m*, thus furnishing a hinge joint. In the center of the pan there is a tapering hole, into which the pole *k* is inserted and keyed, as shown at *u*. To the bottom of the pan the slate pocket is bolted, having the slate discharge gate *e* operated by the bell-crank *v*. The part *w* supporting the bell-crank *v* is bolted to the pan *b*. The lever *x*, in connection with *y*, operates the crank *v*. To the shaft *h* is keyed the gear-wheel *n*, which gears with the wheel *o*, keyed to the shaft *p*. To the shaft *p* is keyed the worm-gear *q*, which in turn gears with the wheel *r* keyed to the shaft *s*. To this shaft *s* are keyed the sprocket-wheels for the coal elevator *d* and the slate elevator *t*.

In many cases friction-gearing is used instead of toothed gearing.

The bottom of the tank is built as shown in the side view *B* and the end view *C*; the bottom is inclined so that the waste coming from the coal will slide down to the slate elevator *t*. The arrangement shown at *g* is used for discharging the tank.

The operation of the jig may be explained thus: The coal and slate to be separated are delivered in the perforated pan *b*, which moves up and down in the tank filled with water at the rate of 180 times a minute.

By this movement the water coming through the holes in the pan creates an upward current, and causes the coal to rise and gradually travel towards *c*, where it passes through the opening in front of the pan down into the coal elevator *d*, by which it is elevated to a chute leading to the coal pocket or to the place where it is to be picked.

The slate being much heavier than the coal sinks to the bottom of the pan, and gradually works its way to the front

of the pan into the slate pocket, and is discharged into the slate elevator *t* through the gate *e*.

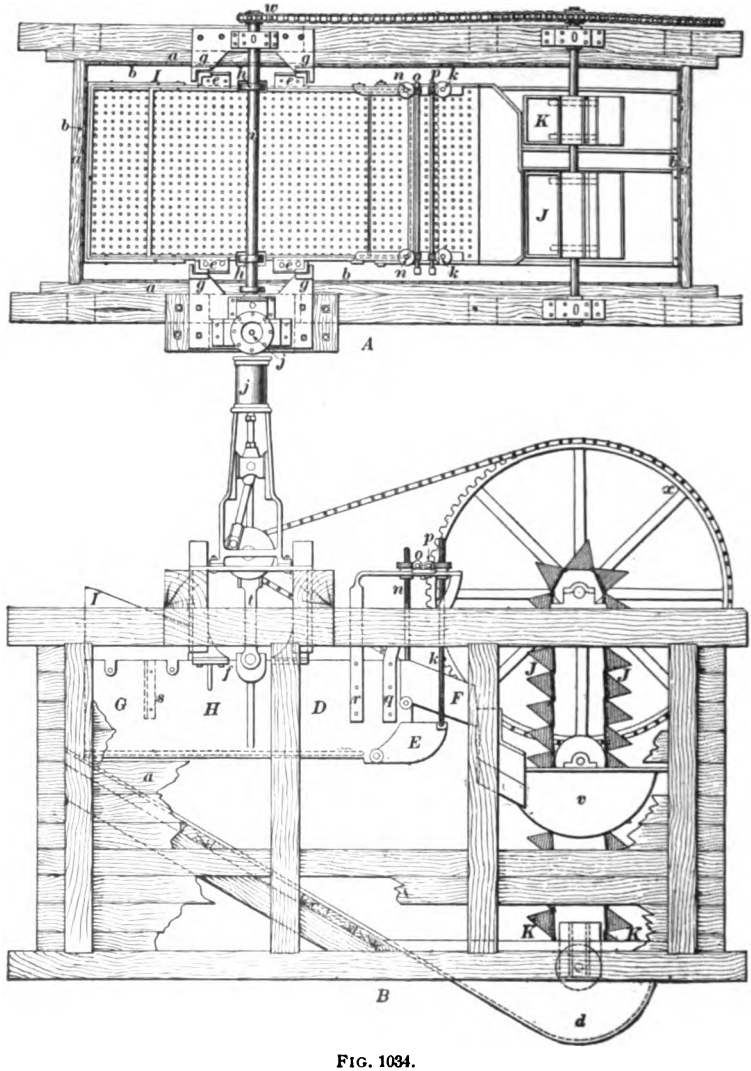

FIG. 1034.

2870. Fig. 1034 shows another type of jig with a movable pan; but the pan, instead of being circular, like the one

just described, is rectangular. This type of jig is known as the **Christ patent coal jig.** The figure shows a plan *A* and a side view *B*. This jig has been introduced into the anthracite coal region since the beginning of the year 1895, and at the present time over fifty of them are in operation. The machine is enclosed in a water-tight tank 11 feet long, 5 feet 4 inches wide, and 6 feet 9 inches high. The lining *a* of the tank consists of white-pine plank well corked, so as to prevent leakage. Inside of this lining is another lining *b* of tongued and grooved pine floor boards. The tank has an inclined floor *c* leading to the front and from both sides into a cast-iron boot *d*, placed at the bottom and to the front of the wooden tank.

2871. The principal mechanism of the machine consists of a cast-iron jig box *D*, a longitudinal section of which is

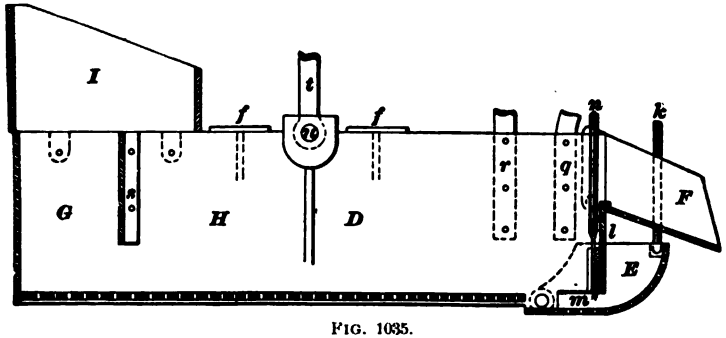

FIG. 1035.

shown in Fig. 1035, which is placed inside of the wooden tank, so that the rear end is at a slight distance from the inner surface of the tank, and the top is about 12 inches from the top of the tank timbers. The jig box is provided on each side with two guides *e* (four in all), which are secured to the box by means of bolts on the extension plates *f* in such a way as to incline the box towards the front end of the tank. Corresponding with these guides are similar ones *g* which rest on plates, and which are in turn fastened to the timbers of the tank so as to make the guides *g* stationary, while the guides *e* are adjusted to move up and down by means of

eccentrics *h* on the main shaft *i*. The shaft *i* is connected with an engine *j*, of about 12 horsepower, fitted with a governor and with the necessary oil-cups.

To the front and at the bottom of the box *D* is a pivoted adjustable gate *E*, which is raised or lowered by means of a hooked screw *k*. The front wall *l* of the box, Fig. 1035, does not extend up as high as the sides, but forms an opening, at the sides of which is pivoted a discharge chute *F* having a perforated bottom.

The main bottom of the box, which does not extend quite to the front, is likewise perforated, as is also the bottom of the pivoted gate *E*. On the inside of the front wall *l* of the box, between the front wall and ribs cast on the side walls, is a secondary plate *m*, which is vertically adjusted by means of the screws *n*, riveted to the plate. The screws *n* and *k* are regulated by means of the shafts *o* and *p*, on which are fitted worms gearing with worm-wheels on the screws *n* and *k*, which are fitted to arms *q* and *r*. At the rear end of the jig box is a cast-iron division-plate *s* riveted to the side walls of the box. This plate does not extend quite to the bottom, but acts as a partition between the two main chambers *G* and *H*. Above the box proper and riveted to its sides is a receiving hopper *I*.

A little to the rear of the center of the box on both sides are sockets, into which extend the eccentric arms *t*, the tops of which are supported by the eccentrics *h* fitted to the main shaft *i*, the bottoms being supported by the pins *u* passing through the sockets.

2872. The Operation of the Machine.—The wooden tank is filled with water to a depth not quite sufficient to cover the jig box entirely when at its highest position, but completely submerging it when at its lowest point.

The engine which revolves the shaft *i* is put in motion, and this in turn operates the eccentrics *h* fastened to the eccentric arms *t*. The eccentric arms give the box a reciprocating motion, which agitates the body of water in the tank. As the box reciprocates, it causes the guides *e* which

are fastened to it to move up and down on their ways *g*. The coal and slate or other material to be jigged is brought by some convenient means to the hopper *I*, and passes down through the receiving chamber *G* to the bottom of the box. The plate *s* prevents the entering material from spreading over the entire surface of the box, as it would otherwise do; it tends to keep the material confined in a small space. As a consequence of this the coal and slate separate, the heavier slate falling to the bottom. All the material then passes through under the plate *s* into the second or jigging chamber *H*.

In this chamber the material forms itself into two distinct layers by virtue of the difference of their specific gravities, the heavier material or slate passing to or remaining at the bottom and the lighter material or coal passing to the top. The slate at the bottom forms a layer, the overlapping pieces and the perforations of the bottom plate being to the jig what the valves are to a pump; that is, when the box descends these laps open slightly, permitting the water to pass through and leave the lighter material, and when the box rises, the water is partially prevented from passing down through the material. The material having formed into layers, the next important matter is the limitation and drawing off of these layers. The two layers pass to the front, where the heavier material falls through the opening of the bottom jig box into the pivoted discharging receptacle *E*. This gate, or receptacle, being adjusted by the rods *k*, can be regulated by the shaft *p* while the machine is in motion, so that the adjustment can be of the greatest delicacy. The secondary plate *m* on the inner wall of the box is adjusted in the same way, and is used to increase or diminish the size of the opening through which the slate passes from the jigging receptacle to the slate discharge gate. The plate is useful for accommodating the different sizes of material (that is, one size at a time; for instance, if the jig is working on stove coal, it can be adjusted to take chestnut coal or pea coal, but not at the same time that it is taking stove coal) and also for assisting the gate *E*.

It will be noticed that this gate *E* can be raised to such an extent that there will not be any material whatever passing over it; or it can be lowered to such an extent that all the material passing to the front of the jig will escape through it; or it can be placed at any intermediate point, so that whatever the material to be jigged the height of the front of this gate determines the weight of the refuse that it will take out.

If it is high it will take out only the very heavy material, and if lower it will take out lighter material. The object is to have the front of the gate at just such a point that the slate or heavy material will pass over it and the light material or coal remain in the receptacle *H*, until it rises high enough to pass over the shortened front wall of the box and into the pivoted chute *F*.

2873. An essential point in jigging is that there should be a continuous slate layer at the bottom, and that this should not be varied much. It will be noticed that this is accomplished by having the front of the slate gate always above the bottom of the jig box, thus insuring a constant layer. The top of the slate gate determines or rather marks the line of separation, or that line where the slate layer and the coal layer meet. The coal, after passing into and over the chute *F*, is taken into a second chute at its front, which leads into an elevator boot *v* at the front and about half-way from the top of the tank. The coal elevator *J* takes the coal from this boot and conveys it into a chute which leads to the storage pocket. The slate, after leaving the slate gate, falls onto the inclined floor of the tank, and, together with some coal dirt that passes through the perforations, is taken into the elevator *K* to the front and at the bottom of the tank. The elevator *K* takes it from here to the refuse chute. The elevators *J* and *K* are operated by means of the two sprocket-wheels *w* and *x*, one on the main shaft *i* and the other on the elevator shaft.

It is necessary to slush the tank several times during a day, in order to take the dirty water off and to loosen the

dirt that might accumulate on the floor of the tank. For this purpose a slush gate is provided on the bottom of the slate-elevator boot *d*.

2874. Where coal jigs are used, more especially in jigging chestnut coal, very light slate is buoyed up by the water and carried out with the coal. This slate is removed by the slate picker shown in Fig. 1036, which is placed in the chute leading from the coal elevator.

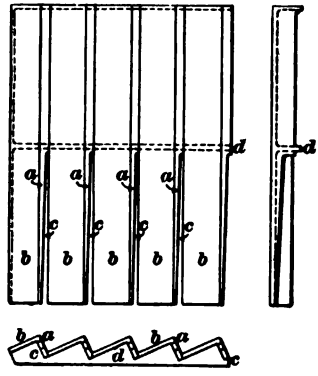

FIG. 1036.

Where stove and egg coal are jigged, the coal after leaving the jig is hand picked by men and boys.

The slate picker shown in Fig. 1036 is made of iron cast in one piece, and consists essentially of a series of V-troughs, one side *a* of the V being shorter and at right angles to the other side *b*. The lower half of the casting has a taper slit *c* in the short side. The slit is so arranged that anything lying on the long side of the trough and of not too great height can slide out through it. Any lump which is thicker than the height of the slit will, of course, be retained in the trough. The slits widen as they approach the lower end, and the part of the casting below the cross-bar *d* hangs freely, so that there is nothing to stop a lump from sliding through the slit. As the coal and slate come down the chute, each lump places itself in one or the other of the grooves or troughs, which are made a little wider than the largest lump of the size for which the slate picker is to be employed. As the lumps slide down, all the flat pieces tend to pass out through the slit on the side, while cubical lumps go over. Should a piece catch in the slit in consequence of the increase in height towards the end, some of the pieces which follow will generally knock it loose, so that it does not remain and block the slits.

The size and taper of the slit, the pitch of the picker, the

width of the troughs, and the length of the upper and lower portion of the casting vary with the size of the coal and the nature of the slate. This class of slate picker is sometimes used for the larger coal, such as broken and egg. It is also used where there is a great amount of flat coal, which, while unsightly and unmarketable in its flat shape, is nevertheless pure coal. In this case the flat slate and coal coming from this picker is run to a separate set of rolls and broken into smaller sizes.

MACHINERY FOR CONVEYING THE COAL IN THE BREAKER.

2875. This is a class of machinery that is generally used for changing the position of the coal, although, as was shown in Fig. 1024, a part of it is also used in the preparation of the coal. It comprises chutes, elevators, drags, or conveyors, and loading lips.

2876. The **chutes** are used for conveying the coal and slate from one part of the breaker to the other, and are inclined downwards, upwards, or are horizontal. Those that are inclined downwards convey the coal from a higher to a lower level, the coal and slate sliding down by gravity. As a rule, the cross-section of this class of chutes is in the form of a rectangular trough, the depth and width depending upon the size of the coal or slate and the amount that is to be carried down the chute. The pitch depends upon the size and quality of the material.

Fig. 1037 shows the cross-section of a chute as ordinarily constructed. The bottom consists of a row of planks *a* spiked to the support *b*. The sides *c* are spiked to the bottom plank *a*, and are covered, as a rule, with either cast plate or sheet iron *d*. The side iron *d* is put on before the bottom iron *e*, so that the bottom iron will fit between the side irons, for it is necessary to change *e* oftener than *d*.

FIG. 1037.

The thickness of the iron depends upon the work to be

performed; the larger the coal the heavier the iron, and the smaller the coal the lighter the iron and the greater the pitch of the chute.

2877. The following table contains the pitches per foot of the chutes ordinarily used in the breaker, down which different sizes of coal will slide.

TABLE 50.

Size of Coal.	Pitch in Inches per Foot.	
	Dry Coal.	Wet Coal.
Rice	9	2½
Buckwheat	7	4
Pea	6½	3½
Chestnut	5	3½
Stove	4½	2
Egg	4 (shelly coal, 4½)	2
Broken	4	
Steamboat	4	
Lump	4	

From the above table it will be noticed that the inclination for rice coal, when it is prepared wet, is very slight. Where it is prepared wet the chute is generally lined with terra-cotta pipe (cut in half), and a considerable quantity of water allowed to run down the chute, so as to carry the coal to the pocket.

2878. Some chutes, instead of having a rectangular cross-section, are half-round troughs; and where an abrupt change in the direction of the chute becomes necessary, cast-iron turns are often used, which are spiral, half-round troughs of greater or less length.

Fig. 1038 shows a cross-section that is frequently used when the chutes are inclined upwards or are horizontal. It is a cast-iron trough nailed or secured to the side supports, which are of wood, and is used for a system of drags where the coal or slate is to be elevated from a lower to a higher level, or conveyed from one point to another on the same level.

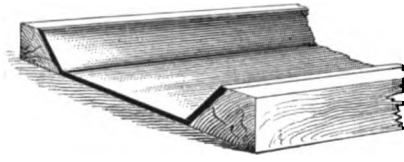

FIG. 1038.

2879. Elevators.—Elevators are used for raising coal or refuse in the breaker. The kind shown in Fig. 1039, known as the **link-and-bar elevator,** is used where the coal is to be elevated to a considerable height.

In the figure *A* shows the side elevation and *B* the end view. The elevator consists essentially of the bucket *a*, the link *b*, the bar *c*, and the wedge *d*, the details of which are shown in *C*. The bucket *a* is made in two parts, the front *f* and the back part *g* being riveted together at the sides. The front *f* contains a double set of holes, which are used for the inside links *h* and the outside links *k*, as shown in *B*. These buckets are usually made of sheet iron in different sizes, 14 inches × 18 inches being a very common size.

The link *b* is made of strap iron, bent to the proper shape and welded together, after which the two bolt-holes are drilled. For a 14-inch × 18-inch elevator-bucket, the links are made of 2-inch × ⅝-inch iron.

The bar *c* is made of wrought iron and has the two collars *l* and *m* welded on, so as to keep the links *b* in the proper position. The bars are made to extend from 3 to 3½ inches over the outside of the buckets, and are run in wooden guides, not shown in the drawing. For a 14-inch by 18-inch elevator-bucket, the bar is of 1½-inch iron.

The wedge *d* is single-tapered and made of oak, having two holes bored in it to permit the bolts which fasten the buckets to pass through it. The wedges are used to make the buckets stand out from each other; for if the buckets were bolted

directly to the link it would be impossible for them to pass over the top and under the bottom wheels, on account of the parts not being flexible enough.

The wheels *n* and *o* at the top and bottom, over and under which the buckets travel, are known as the spiders. They are made of cast iron, bored and key-seated, so that they

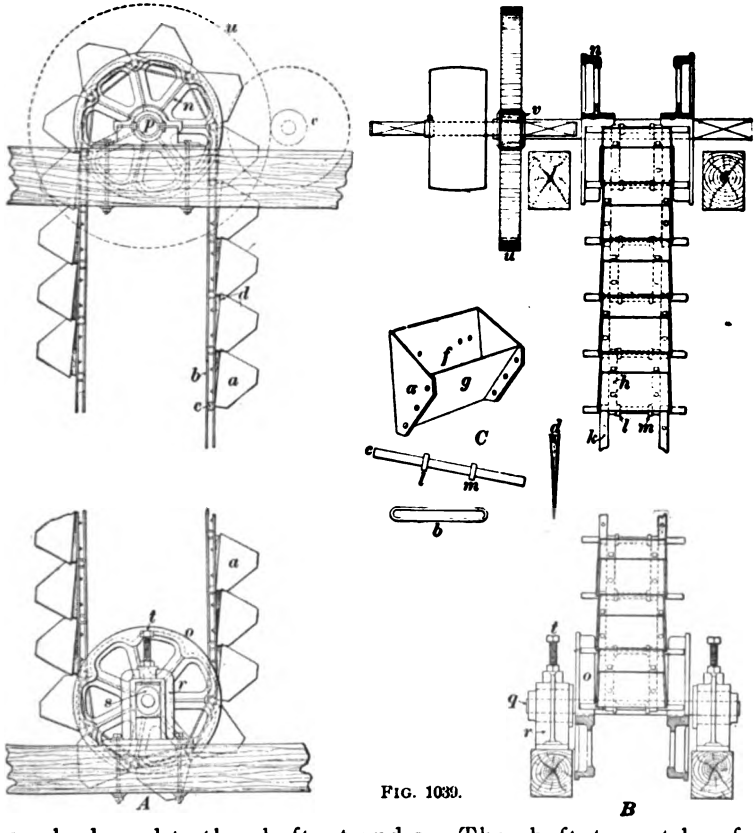

FIG. 1039.

can be keyed to the shafts *p* and *q*. The shaft *p* must be of much greater dimensions than the shaft *q*, for it carries the load, while the shaft *q* merely keeps the spiders that it is keyed to in place.

The bottom stands *r* have sliding boxes *s*, and by means of the set screws *t* the wheel *o* can be raised or lowered, thus

taking up the slack that may be found to exist. The spur-wheel u, as generally used, is very large and the pinion v small, for this class of elevator is never run rapidly. As a rule, for this class of elevators (with 14-inch by 18-inch buckets and upwards) a spur-wheel with 4-inch face is used where the shafts are 35 feet apart and less; if over 35 feet a 5-inch face is used.

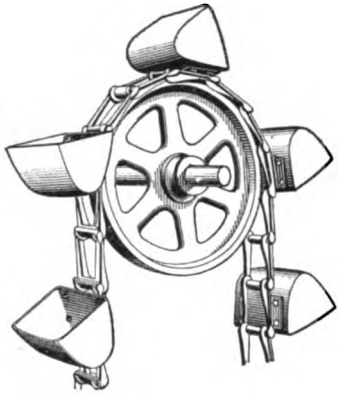

FIG 1040.

2880. In many places the same style of bucket is in use as shown in Fig. 1039, bolted to a heavy rubber belt, running vertically or inclined. There are other styles of elevators used where the height is not so great as it is in cases where the link-and-bar elevator is used.

2881. Fig. 1040 shows a **traction-wheel elevator,** with detachable link belting and cast-iron boxes.

Fig. 1041 shows another type of elevator, known as the **double-chain elevator,** fitted with a cast-iron boot, the boot being fitted with a take-up.

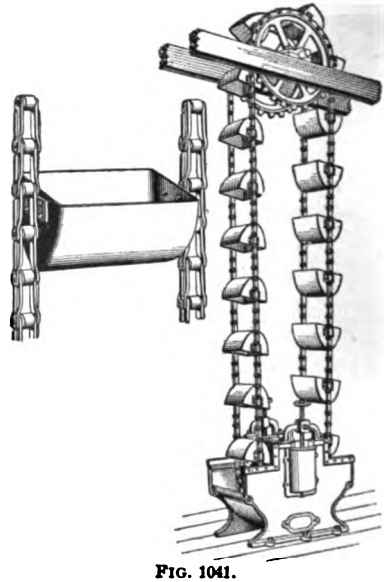

FIG. 1041.

2882. Drags, or Conveyors.—In recent years the methods of handling all kinds of materials have received the attention of the engineering profession in a marked degree, and the result is that large numbers of mechanical conveyors are successfully used in all parts of the country. Conveyors,

drags, or scrapers, as they are often called, are a class of machinery that has found much favor in the anthracite region, and may be used in either horizontal or inclined chutes. Most of the drags or conveyor lines in use in the anthracite region are constructed with the Dodge conveyor chain or the Ewart chain. This class of machinery is used principally for conveying coal, slate, and culm in and about the breaker where it is found impossible to put a chute, and where it is found more convenient and cheaper to use drags than to use a small dump-car or wheelbarrow.

2883. Fig. 1042 shows the elements of conveyors as commonly used in anthracite-coal breakers.

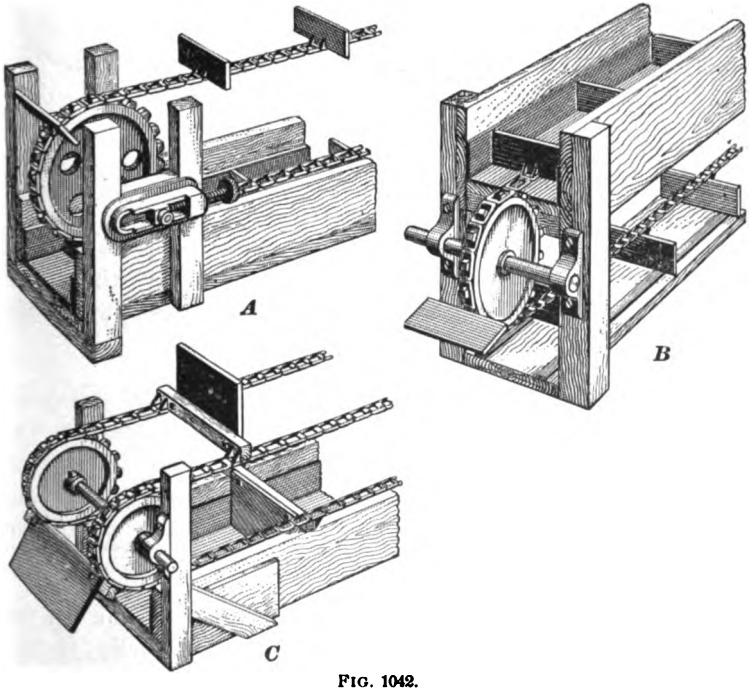

FIG. 1042.

In this figure, *A* is known as the **flight conveyor,** *B* as the **upper and under run conveyor,** and *C* as the **drop-flight conveyor.**

These drags, as shown, are made up of a trough or chute, at each end of which are sprocket-wheels, over which the link chain carrying the conveyor flights is run. These flights are fastened to the chain by a special link inserted in the chain. The drags are also fitted with a take-up, so as to take up any slack that may occur. At the driving end of the line the driving-wheel is either keyed to the same shaft as the sprocket-wheel, or a pinion and spur-wheel is used.

These drags are driven by a rubber belt, by a wire or hemp rope, or by link belting, as shown in Fig. 1043. The

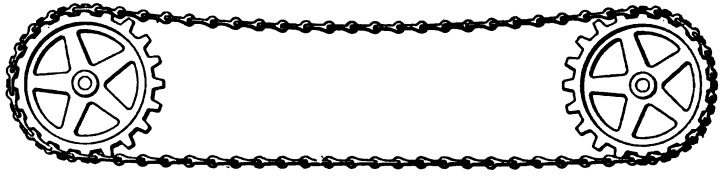

FIG. 1043.

principal value of link belting as a power transmitter lies in the nature of its construction; since, being composed of links and used with sprocket-wheels, it forms a positive belt and prevents any loss of motion through slipping, as is often the case with rubber belts or hemp ropes. Where the power is to be transmitted at a slow rate, the link belting is far superior to anything else.

2884. Loading Lips.—These are specially designed chutes to convey the coal from the pockets located in the bottom of the breaker to the bottom of the railroad-cars, so as to prevent breakage. There are two types of loading lips, one for lump and steamboat coal and the other for the smaller sizes.

2885. Fig. 1044 shows a side view of a loading lip for lump and steamboat coal. It consists essentially of the apron *a*, made of sheet iron and hinged to the main chute at *b*. The car to be loaded runs under the chute, and the apron is let down into the car by means of the lever *c*. The gate *c* is then opened, and the coal is allowed to run over

the lip screen *f*, which takes out the finer coals. By raising or lowering the apron and regulating the flow of the coal at

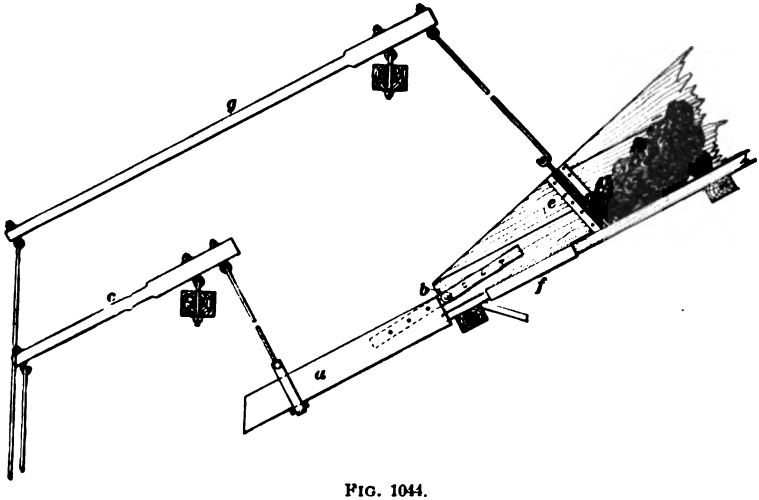

FIG. 1044.

the gate by means of the lever *g*, the coal can be deposited in the car as desired.

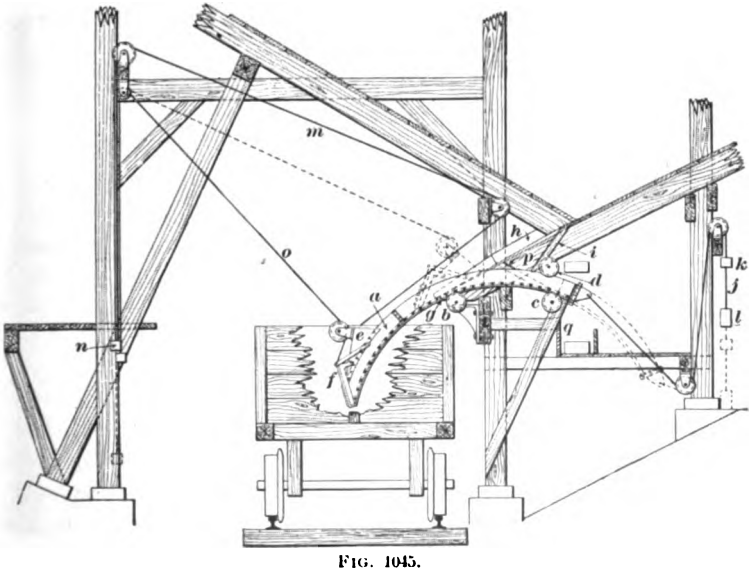

FIG. 1045.

2886. Fig. 1045 shows a sectional view of a loading for coal below the size of lump and steamboat; it is kn as the **Griffith loading chute.** This apparatus cons essentially of a rectangular wrought-iron trough *a*, curve part of a circle and resting on guide-rollers *b*, *c*, and *d*. has a hood *e* and a gate *f* on its front end, the bottom tending back to *g*, a few inches under the pocket chute taining the lip screen *h*. It is cut away here, so that operation of the screen *h* and the small chute *i* will not interfered with while the loading chute is in use, nor w it is drawn back out of the way of cars.

The weight of the chute is nearly balanced by the cha and weights *k* and *l*; the remaining part of the weigh carried by the hand chain *m* and the weight *n*.

The chute runs forward as soon as the chain *m* is sla ened off. The small chain *o* is for manipulating the gat The waste coming from the lip screen *h* is conveyed by chute *p* to the conveyor line, which runs in the trough *q*.

DESCRIPTION OF AN ANTHRACITE BREAKER.

THE CONSTRUCTION.

2887. Figures 1046, 1047, and 1048 show the pla elevation, and cross-section, respectively, of an anthracite breaker.

This breaker, as shown, is not arranged for any particular opening, but can be used for shaft, slope, drift, tunnel, or stripping. It is so arranged that part of the coal is prepared wet and part dry.

The general plan of the structure is a wooden trestle.

2888. The Plan View.—The plan, Fig. 1046, shows the arrangement of the posts and the general arrangement of the machinery used in the breaker. It also shows a diagram of the process of the preparation of anthracite coal for market.

TH
PUBL
TILDE

THE NEW
PUBLIC
ASTOR
TILDEN

From the plan it is seen that the structure is made up of a number of **bents,** ranging from *0* to *13*, parallel to one another.

The posts making up bents *0* and *1* occupy the same wall, which is built continuous throughout. The posts of bent *0* rest on the masonry, while those of bent *1* are set in a mortised sill which is laid the entire length of the wall. The posts for bents *2*, *3*, and *4* are also placed on sills, occupying a continuous wall.

Bent *3* has two sills occupying the same wall, one being used to support the posts which act as braces for the coal pockets, as will be seen from the elevation, Fig. 1047. The posts of all the remaining bents are set upon piers, and are all capped with a dressed stone, as shown in Fig. 1047. It will be noticed that bents *1*, *2*, and *3* have a greater number of posts than any of the other bents; these extra posts are put in to support the coal pockets.

2889. All of the machinery connected with this breaker is driven by the single engine *a*.

The crank-shaft of this engine has keyed to it the fly-wheel *b*; two main belt pulleys *c* and c_1, to drive the main line shaft *V* of the breaker by means of the belt pulleys c_2 and c_3; a belt pulley *d*, which, in connection with the belt pulley d_1, is used to drive the No. *1* or main rolls *C*; a belt pulley *e*, which, in connection with the belt pulley e_1, is used to drive the No. *3* rolls *E*; a rope pulley *f*, which, in connection with the rope pulley f_1, drives the bony-coal rolls *F*; a rope pulley *g*, which, in connection with the rope pulley g_1, drives the slate-picker rolls *G*; a rope pulley *h*, which, in connection with the rope pulley h_1, drives the main 24-inch elevator u_5; a rope pulley *i*, which, in connection with the dotted rope pulley i_1 and the miter gears at *j*, is used for driving the broken-coal screen *k*. The main line shaft *V* of the breaker, which is driven by the main driving-wheels *c* and c_2 and c_1 and c_3, stretches across the entire width of the breaker, and has a number of different driving pulleys attached to it. It is made up of a number

of different pieces of shafting, coupled together by means of faced flanged couplings, shown in Fig. 1049.

The ends of the shafts to be coupled are key-seated and placed in the flanges shown in Fig. 1049, and keyed; two of the flanges are then placed together and bolted, as shown.

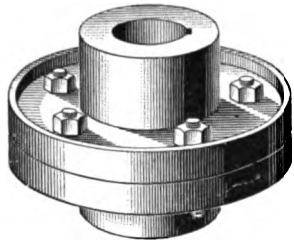

FIG. 1049.

The mud screens l, l_1, and l_2 are driven by the pulleys m and m_1, m being keyed to the main line shaft V of the breaker and m_1 to the shaft m_2. The shaft m_2 carries three miter gear-wheels m_2, m_4, and m_5, and the three shafts at right angles to the shafts m_3 have small pinions which gear with the spur-gear of the screens l, l_1, and l_2.

The belt pulley n on the main line shaft V, in connection with the belt pulley n_1, drives the No. 2 rolls D, which are known as the monkey or prepared-coal rolls.

The rope pulley o, keyed to the main line shaft, in connection with the rope pulley o_1 and the spur-gearing o_2, drives the three lines of drags t_3 which convey the coal from the chestnut-coal jigs p, p_1, and p_2 to the picking chutes, where it is picked before entering the pocket.

The belt pulley q, in connection with the belt pulley q_1 and the bevel-gearing q_2 and q_3, drives the slate-picker screens q_4 and q_5 for chestnut and stove coal, respectively.

The belt pulley r, in connection with the belt pulley r_1, drives the pistons (r_2-r_4) in the chestnut jigs p_2, p_1, and p.

The belt pulley s, keyed to the main line shaft, in connection with the belt pulley s_1, drives the pistons s_2 and s_3 for the stove-coal jigs t and t_1.

The rope pulley u, in connection with the rope pulley u_1, the stress pulley u_2, and the spur-gearing u_3, drives the drags t_4, which convey the coal from the stove-coal jigs t and t_1 to the picking chutes.

The belt pulley v, in connection with the belt pulley v_1, drives the pistons v_2 and v_3 for the buckwheat-coal jig w and the pea-coal jig w_1.

The rope pulley x, in connection with the rope pulley x_1, the deflecting pulleys x_2, and the pinion x_3, which gears with the spur-gear x_4 of the screen, is used to drive the wet rice-coal screen x_5.

The belt pulley y, in connection with the belt pulley y_1, and the pinion y_2 which gears with the spur-gear y_3 of the screen, and which in turn gears with another large screen gear y_4, of the same dimensions as y_3, drives the two wet pea-coal screens y_5 and y_6.

The rope pulley z, in connection with the rope pulley z_1, the deflecting pulleys z_2, and the spur-gearing z_3, drives the drags t_2 and t_3 which convey the coal from the buckwheat-coal jig w and the pea-coal jig w_1.

The rope pulleys a and a_3, in connection with the rope pulleys a_2 and a_4, the two pairs of deflecting pulleys a_5 and a_6 used to change the direction of the driving rope, and the pinions a_7 and a_8 which gear with periphery spur-gears a_9 and a_{10}, are used to drive the two steamboat screens a_{11} and a_{12}.

The belt pulleys b_1 and b_3, in connection with the belt pulleys b_2 and b_4, and the pinions b_5 and b_6, which gear with the screen gears b_7 and b_9, and which in turn gear with other large screen gears b_8 and b_{10}, of the same dimensions as b_7 and b_9, are used for driving the wet and dry egg-coal or main screens b_{11} and b_{12}, and b_{13} and b_{14}.

The rope pulley d_3, in connection with the rope pulley d_2, drives the shaft d_4; to the shaft d_4 are keyed the bevel-gears d_5 and d_6 which drive the slate-picker screens d_7 and d_8, and which are used to take the slate out of the dry chestnut and stove coal, respectively. To this shaft d_4 is also keyed the belt pulley d_9, which, in connection with the belt pulley d_{10} and the gearing d_{11}, drives the lump-coal lip elevator d_{12}.

The rope pulley e_2, in connection with the rope pulley e_3, the deflecting pulleys e_4, and the pinion e_5, which gears with the spur-gear e_6 of the screen, is used to drive the dry rice-coal screen e_7.

The belt pulley f_2, in connection with the belt pulley f_3, and the pinion f_4, which gears with the spur-gear f_5 of the screen, and which in turn gears with another large screen

gear f_6, of the same dimensions as f_5, drives the two
dry pea-coal screens f_7 and f_8.

The driving-shaft for the broken-coal screen, whic
driven by the rope pulleys i and i_1, carries a belt pulle
and, in connection with the belt pulley g_3 and the gearin
drives the broken-coal drags g_5 used to elevate the br
coal from the broken-coal screen k, so that it can be pi
before entering the pocket.

The driving-shaft for the egg-coal screen b_{11}, driven
the belt pulleys b_1 and b_2, has a rope pulley k_1 keyed t
and this, in connection with the rope pulley k_2, the def
ing pulleys k_3, the pinion k_4, and the screen gear k_5, is
to drive the lip-screenings separator k_6.

To the shaft k_7, driven by k_3, is keyed a small pinion
which is geared to the spur-gear k_9, and which in turn dri
the lip-screenings elevator k_{10}.

To the shaft k_7 is also keyed the rope pulley k_{11}, which,
connection with k_{12}, directly under k_{11}, drives the gear k_{13}
which gears with k_{14} and k_{15}, and they in turn drive th
bevel-gears k_{16} and k_{17}, which drive the sprocket-wheels k_{18}
and k_{19}, and k_{20} and k_{21}, to which are attached the drags k_{22}
and k_{23}, used to convey the lip screenings to the lip-screen-
ings elevators k_{10}.

2890. In Fig. 1046, l_3 and l_4 show the rails for the load-
ing track, where the house-cars and gondolas are loaded for
shipment, while l_5 and l_6 show the rails for the loading track,
where the smaller railroad-cars are loaded for shipment.

The rails l_7 and l_8 are those used for a narrow-gauge track
to run a small dump-car over, to carry the lump-coal screen-
ings from the pocket under the lump-coal chute to the
screenings elevator d_{12}, by which they are elevated into the
breaker to be reseparated.

The three rails l_9, l_{10}, and l_{11} form the double tracks for the
dump-cars which convey the culm and rock to the waste
heaps.

2891. The Side Elevation.—Fig. 1047 is a side
elevation of the breaker with the sheathing removed, and

THE
PUBL

THE NEW YORK
PUBLIC LIBRARY
ASTOR
TILDEN FOUNDATIONS

shows the arrangement of the screens and other machinery.

From the elevation it is seen that the breaker is located on a sloping surface. The piers A are arranged in steps, while the continuous walls B are almost all on the same level. This figure also shows the method of framing and bracing. Instead of using the ordinary mortise and tenon for framing, cast-iron brackets m_6 and m_7 are used for many of the larger sized timbers. As shown, these cast-iron brackets m_6 and m_7 have two small projecting arms m_8 and m_9, which are set into the mortised timbers. Generally, each bracket has six holes drilled in it to receive the bolts—four for the upright posts and two for the cross-timbers—one set of bolts doing for two brackets, as here shown, the bolt-holes in the brackets being set in line with each other.

The transverse timbers, as shown by m_{10}, are also secured by brackets. As shown in the figure, these timbers are a little above the timbers shown in the side view, so that the bolts will not meet each other. The braces are nearly all at 45° or 30° to the uprights and secured by oak pins.

2892. In this figure n_2 shows a mine-car in the position of dumping, or being tipped; the part n_3, covered by the roof n_4 and having the floor on which are spiked the rails n_5, is known as the tip house, or the place where the mine-cars are dumped. The dump n_6 is known as the cradle dump, which has already been spoken of.

The coal as it comes out of the mine-car passes over the bars n_7 to n_{11}, which are generally spoken of as the main screening or platform bars; they are set 3½ to 5 inches apart.

The coal that drops through the bars n_7 to n_{10} passes into the V-shaped hopper o_3. This hopper is made the entire width of the screening bars, and in many cases it is referred to as the **main hopper.** As shown, the bottom o_4 of this hopper rests on very heavy beams o_5, which are notched into each other at o_6. The bottom is always very heavily ironed, but the sides are lined with a very much lighter iron. There are three openings at the lower end to feed the coal out of

the hopper o_2 into the circular hoppers o_{11}, which convey the coal to the three mud screens l, l_1, and l_2, l being the only one shown, as the other two are parallel to it.

The three mud screens l, l_1, and l_2 are built very short, and are used to obtain only a partial separation of the coal. They are single-jacketed screens having three rows of segments, and are constructed in the same manner as those already described. From this view, it is seen how the small pinion underneath the screen meshes with the screen gear. It will be noticed that the pinion is keyed to a shaft that is horizontal, while the screen shaft to which the large gear is keyed is set at an angle, so as to give the required pitch to the screen. The back ends of these screens are supported by hangers, which are bolted to the cross-timbers o_9. The journals at the front end of the screens are placed in specially designed boxes that rest on the cross-timber o_9.

The side elevation shows how these screens are driven; for from the plan it is evident that the mud screens l, l_1, and l_2 are driven by the pulleys m and m_{11}, m being keyed to the main line shaft V, and m_1 being keyed to the shaft m_2. From this view, only one of the three miter gears can be seen, m_{22}, which is keyed to the shaft m_2.

Directly above these three mud screens are located the three water troughs p_3, p_4, and p_5. In this view the trough p_3 obstructs the view of p_4 and p_5, which are arranged parallel to p_3. These troughs are kept overflowing, the water being fed by a pipe p_6 in the bottom of the troughs. The feed-pipe p_6 connects with the pipe p_{11}, which is connected to the water-tank p_8. The water is pumped into this tank through the pipe p_9. In many cases the pump is located in the interior of the mine. The tank p_8 is located above the troughs p_3, p_4, and p_5, so as to get enough head to keep the water overflowing in the troughs.

The coal that drops through the bars n_{11}, which are 5 inches apart, passes into the main or No. 1 rolls, which are marked C.

2893. The inclined floor q_6 is covered with cast plates on a pitch of 1½ inches to the foot, and is known as the

platform. The coal that has passed over the main screening or platform bars is cleaned and assorted on this platform q_6 by a number of men known as platform men. This platform consists of symmetrical halves; that is, it has two holes to take the coal to the main rolls C, and two places q_7 to throw the chippers to be chipped. The inclined part q_6 is where the lump coal and heavy rock are pushed over by the platform men into the lump-coal and rock chute q_9, which is one chute, but divided by a partition, the lump coal being allowed to run on one side and the rock on the other.

The beams q_{10}–q_{14}, shown in this figure, are used to support the lump-coal and rock chute, the planking for the floor of the chute being removed.

Another view of this chute is shown by q_{15} q_{16}; the lump coal and rock coming over the top of the breaker change their course by dropping into the chute q_{15} q_{17}, located at right angles to the chute supported by the beams q_{10}–q_{14}. The lump coal, in running over q_{15} q_{16}, is allowed to drop through an opening in the bottom at q_{17} into another section of the chute q_{18} q_{19}, which is directly under q_{15} q_{16}. The rock which runs parallel to the lump coal passes over the end of q_{15} q_{16} into the slate chute q_{20} q_{20}, which is located directly underneath the lump-coal chute q_{18} q_{19}. The rock from chute q_{20} q_{20} is loaded into dump-cars that run over the rails l_{10} and l_{11} to the rock bank.

Underneath the lump-coal chute q_{18} q_{19} is located the V-shaped pocket q_2 used to hold the lump-coal screenings, which are the smaller pieces of coal that have been broken off the larger lumps that drop through the bars located directly above the pocket. These lump-coal screenings are loaded into a small dump-car that runs over the rails l_7 and l_8, and conveys them to the lump-coal screenings elevator d_{12}, whence they are lifted into the breaker to be reseparated.

The hopper r_5 is for the main rolls C; it is circular in section, and is used to convey the coal from the rolls after it has been crushed. This hopper, as shown, is on a good pitch, so that there is no danger of the coal stopping up and thus "stalling" the rolls.

2894. The coal, after leaving the hopper r_8, drops into r_9, where it is divided, the one part going to the steamboat screen a_{11} and the other part to the steamboat screen a_{12}.

The steamboat screens a_{11} and a_{12} are both of the same dimensions, and are arranged parallel to each other. They are double-jacketed cast-iron screens with four rows or sets of segments, steamboat-coal coming out of the end of the inside jacket and broken coal coming out of the end of the outside jacket.

As shown, the steamboat screen a_{11} is driven by the screen gear a_9, which gears with the small pinion a_7. From this view it is shown how the rope pulley, a_3 and a_6 are located, a_3 being driven by the rope pulley a_1, which is keyed to the main line shaft V. The driving-gear for the other steamboat screen a_{12} is arranged parallel to the driving-gear of the screen a_{11}, and all the parts of it are of the same dimensions as those shown in this figure. The back ends of the screens are supported by hangers which are bolted to the beam r_7. The journals at the front end work in specially designed boxes which are bolted to the beam r_8.

The chutes r_9 and r_{10} carry the steamboat and broken coal that comes from the steamboat screens a_{11} and a_{12}. Parallel to the chute r_9 is the chute r_{11}, which carries the coal that comes out of the front end of the three mud screens l, l_1, and l_2. The coal that travels down chutes r_9, r_{10}, and r_{11} is picked in the picking room r_{12}.

The steps r_{13}–r_{19} show the arrangement of the floor in the picking room r_{12}, which consists of a series of steps, or short platforms, arranged one above the other.

2895. The hopper s_4 for the mud screens is cut away to show the partition s_5, which is used to separate the fine coal from the coarse coal. The chute s_6 carries the coarse coal that drops out of the two rows of segments on the three mud screens. This coal is conveyed to the wet egg-coal screens b_{11} and b_{12}. The chute s_7 carries the fine coal that drops out of the segment on the back end of these three mud screens. This coal is conveyed to the two wet pea-coal

screens y_5 and y_6. The chutes s_6 and s_7 are made water-tight to prevent the water from constantly dripping.

The number of circular rings that compose the figures b_{11} and b_{12} are the projections of the circular screen rings to which the segments are bolted that make up the wet egg-coal screens. The inside circles are used to support the inside jacket, and the outer circles to support the outside jacket.

The small circle marked b_8 is the pinion that meshes with the screen gear b_{11}, which in turn gears with b_9. The circle marked b_9 represents the belt wheel which is used in the driving of the wet egg-coal screens b_{11} and b_{12}. The circle marked k_1 represents the belt wheel which is keyed to the driving-shaft for the wet egg-coal screen, and is used to drive the lip-screenings elevator k_{10}.

The number of circular rings that compose figures y_5 and y_6 are the projections of the circular screen rings to which the segments that go to make up the wet pea-coal screens are bolted.

The small circle y_3 represents the pinion that meshes with the screen gear y_{11}, which in turn meshes with y_4. In this case the pinion, instead of being underneath the screen, is on the top. The circle y_1 represents the belt wheel that drives the pea-coal screens.

2896. The screen q_6 shows the arrangement of a slate-picker screen which is arranged parallel to the slate-picker screen q_4, as shown in the plan. These screens are made up of three sets of cast-iron segments, known as **slate pickers.** As shown, the longitudinal openings in these pickers through which the flat slate drops out are at right angles to the screen shaft.

There are three cast-iron rollers on the top of each screen, which are not shown here, one for each set of slate pickers. These are used to keep the openings in the slate pickers from becoming clogged, for if they were not used, the flat slate would soon block up the openings. The slate screen q_4 is used for taking slate out of the stove coal as it comes

from the meshes of the stove-coal segments on the wet egg-coal screens b_{11} and b_{12} before entering the stove-coal jig. The slate screen q_6 is used for taking slate out of the chestnut coal as it comes from the meshes of the chestnut-coal segments on the wet egg-coal screens b_{11} and b_{12} before entering the chestnut-coal jig. These screens are driven by the bevel-gears, as shown by q_3, located at the front end of the screens, which in turn are driven by the belt pulleys q_1 and q, q being keyed to the main line shaft V.

2897. The tank w shows the end view of the buckwheat-coal jig tank. The tanks for stove, chestnut, and pea coal jigs are arranged parallel to the tank w. The chute t_2 shows the inclined drag-line chute for buckwheat; t_3, shown in the plan, is for pea coal, and is arranged parallel to t_2; they convey the coal from the jig tank w and w_1 to chutes which convey the coal to the buckwheat and pea coal pockets.

The chute t_4 shows the inclined drag-line chutes that convey the coal from the stove-coal jig tanks to the picking chutes, where it is picked before entering the pockets. The chutes t_5, shown in the plan, are arranged parallel to the chutes t_4, and are used for conveying the chestnut coal from the chestnut jig tanks to a chute which leads to the chestnut-coal pocket.

The belt wheel v_1 is in line with the belt wheels s_1 and r_1, and shows the side view of the three belt wheels which are arranged parallel to each other. They run the line shafts for the jig pistons of the buckwheat and pea and stove and chestnut coal jigs. One of the cams u_4 which gives the up-and-down motion to the jig pistons is also shown in this view.

2898. The circle h_1 shows the side view of the rope pulley that is used in connection with the driving-gear of the main elevator u_5.

This elevator is the regular link and bar elevator, a detail of which is shown in Fig. 1039. In Fig. 1039 the small pinion is geared at the side instead of directly under the large spur-wheel, as shown in this view. The elevator u_5 is

used to elevate all the dry coal that is cracked up by the Nos. 2, 3, 4, and 5 rolls, also that coming from the lip screens under the breaker.

The screen *k* shows a side view of the broken-coal screen, which is a single-jacketed screen having three rows of segments. As shown, the screen gear meshes with the small pinion above the screen. The shaft to which this pinion is keyed runs directly over the center of the screen, and at the front end of the screen is the miter gear *j*, which is driven by the rope pulleys i_1 and *i*, *i* being keyed to the shaft of the breaker engine. (See also the cross-section, Fig. 1048.) The pulley i_1 is keyed to the same shaft as g_3, which is shown in this side view. The pulley g_3, in connection with the pulley g_5 (shown in the plan), drives the drag-line g_6, which conveys the broken coal that comes out the end of the broken-coal screen *k*, after it has passed down a short chute leading to the drags, to the picking chutes, where it is picked before entering the pocket.

The hopper u_4 carries to the main elevator u_5 (see also the plan and cross-section) the different sizes below broken coal that drop through the meshes in the broken-coal screen.

2899. At different times there is a greater or less demand for one size of coal than for any other. When there is little demand, or no demand at all, for broken coal, instead of hoisting it up in the drag-line g_6, it is run into the No. 3 rolls *E* and broken up into smaller sizes; in case there is no great demand for egg coal at the same time that there is no demand for broken, by jacketing the broken-coal screen with segments of a smaller mesh, the egg and the broken coal will come out the end of the screen.

2900. The hopper *u* shows the side view of the roller hopper for the No. 3 rolls *E*, which is used to carry the coal, after being crushed, away from the rolls to the main elevator u_5.

The bony coal coming from the broken, egg, and stove coal pickings is broken into sizes below stove coal by the No. 4 rolls *F*.

All the flat slate and coal coming from the slate-picker screens q_4, q_5, d_7, and d_8 are broken into sizes below chestnut coal by the No. 5 rolls *G*.

The coal coming from the No. 4 and No. 5 rolls is conveyed by the roller hopper u_5, a side view of which is shown in this figure, to the main elevator u_6.

2901. The inclined timbers v_4, v_5, v_6, and v_7 are the supports for the waste pocket *W*. This pocket extends almost the entire width of the breaker, and collects all the waste, such as culm, rock, and slate. The culm, however, coming from the wet rice-coal screen, is carried off in troughs with water and deposited on the slush bank.

The inclined timbers v_4 to v_7 are covered, as shown, with 3-inch planks, which form the bottom of the waste pocket. These planks are covered with cast-iron plates or very heavy sheet iron.

In this pocket, v_8 shows the very fine culm coming from the dry rice-coal screen; v_9 is the slate coming from the picking rooms, and v_{10} shows the slate coming from the buckwheat, pea, chestnut, and stove coal jigs.

At the bottom of this waste pocket *W*, on both sides of the tracks, a number of loading gates are arranged to load the waste into dump-cars that run over the double tracks formed by the three rails l_9, l_{10}, and l_{11}. The position of the No. 2 rolls is shown at *D*. These are commonly spoken of as the prepared coal, or monkey rolls. They break up all the coal coming from the mud screens l, l_1, and l_2, and at times the coal coming from the steamboat screens a_{11} and a_{12}.

2902. The hopper w_3 shows a side view of the circular hopper for the No. 2 rolls *D*, which conveys the crushed coal coming from the rolls to the broken-coal screen *k*.

The screen x_5 shows a side elevation of the wet rice-coal screen. There is another rice-coal screen arranged parallel to this, and of the same dimensions, which is used to prepare the rice coal on the dry side. Both are single-jacketed screens having four rows of segments.

As shown, the wet rice screen x_5 is driven by the large

screen gear x_4, which meshes with the small pinion x_3 over the screen. This pinion is keyed to the same shaft as the rope pulley x_1, which is driven by the rope pulley x keyed to the main line shaft V. The circle x_2 shows the position of two wheels, called deflecting wheels or pulleys, which are used to change the direction of the rope that drives the pulley x_1. These wheels work loosely on the same axle, that they may turn in opposite directions. (See extreme right of end elevation.)

The screen d_7 is a cast-iron slate-picker screen, and the plan shows another similar screen d_8. These screens d_7 and d_8 are of the same dimensions and are arranged parallel to each other. Both of these screens are of the same dimensions as the slate-picker screens q_4 and q_5, and have the same arrangement of machinery in use above the screen for their operation. The screen d_7 is used for taking the slate out of the chestnut coal as it comes from the meshes of the chestnut-coal segments of the dry egg-coal screens b_{13} and b_{14}, as shown in the plan; similarly, the slate screen d_8 is used for taking the slate out of stove coal as it comes from the meshes of the stove-coal segments on the dry egg-coal screens b_{13} and b_{14}.

2903. To the shaft d_4 is keyed the bevel-gear wheel d_6, which is used in driving the slate screen d_7. To this same shaft d_4 are keyed the pulleys d_9 and d_3, which are of the same dimensions; d_9 obstructs the view of d_3.

The pulley d_9, in connection with the belt pulley d_{10} and the gearing d_{11}, drives the lump-coal screenings elevator d_{12}, all of which are shown in this side elevation. The rope pulley d_3, which is keyed to the shaft d_4, is used in connection with the rope pulley d_2, keyed to the main line shaft V, to drive the screens d_7 and d_8 and the lump-coal screenings elevator d_{12}.

The coal that is elevated by the lump-coal screenings elevator d_{12} is conducted by a chute to the broken-coal screen.

The circle u_3 shows the position of the two deflecting rope

pulleys which work loosely on the shaft. They are used in connection with the rope pulley u_1 and the gearing u_2 in driving the stove-coal drag-line t_4. These pulleys u_3 are put in to keep the driving rope above the pea-coal screens.

The circle z_2 also shows the position of deflecting pulleys which work loosely on the shaft. They are used in connection with the rope pulley z_1 and the gearing z_2 in driving the buckwheat and pea coal drag-line t_3. The rope pulley z_3 is put in to keep the driving rope away from the side of the wet rice-coal screen.

2904. The chute w_2 shows the side view of the picking chutes on the wet side of the breaker, where the coal as it leaves the drags and screens is picked by men and boys as it passes down the picking chutes on its way to the pockets.

From w to w_6 is shown the arrangement of the floor in the main picking room.

The coal, after leaving the picking chutes w_2, passes along chutes w_7, which are known as *telegraphs*. These are chutes with no regular sides. The iron that forms the bottom is slightly turned up on each side, so that the coal can leave the chute from the sides as it blocks up from below. They are used for conveying coal or slate to the pockets. In this figure, the arrows placed along the sides of the telegraph w_7 show that the coal, after filling the pocket w_8 from below up, can drop off on either side, and thus completely fill the pocket.

2905. The bottoms of the V-shaped coal pockets w_8, the end view of which is shown in this figure, are supported on beams w_9 and w_{10}, which are on a pitch of 8 inches to the foot. These beams are well supported by the posts and braces forming the bents *1*, *2*, *3*, and *4*. The coal from these pockets can be loaded from either of the loading chutes w_{11} or w_{12}. The coal that is loaded from the chute w_{11} is loaded into house-cars or large gondola cars, which run on the track the cross-section of which is shown in l_3 and l_4. The coal loaded from the chute w_{12} is loaded into the ordinary railroad-cars that run on the track formed by the rails l_5 and l_6.

At x_6 and x_7, in the loading chutes w_{11} and w_{12}, are placed the loading lip screens which take out the fine stuff, which drops into the chute x_8, and is conveyed by the drag flights running over the sprocket-wheel k_{21} to the lip-screenings elevator k_{10}.

The rope pulley k_{12}, in connection with the miter gear, as shown in the plan, and the bevel-gearing k_{16}, as shown in this side elevation, is used to drive the drag-line which passes over the sprocket-wheel k_{21}.

The rope pulley k_{13} is on line with the rope pulley k_{11}, which is keyed to the shaft k_7; to the shaft k_7 is also keyed the rope pulley k_2, which is driven by the rope pulley k_1, keyed to the shaft that drives the egg-coal screens, by means of the idler k_3, which consists of two deflecting pulleys, used to change the direction of the driving rope that runs over the rope pulleys k_1 and k_2.

The screen k_8 shows the side view of the lip-screenings separator, which is in part a double-jacketed screen, driven by the small pinion k_4, which meshes with the screen gear k_5.

The pinion k_4, as shown, is keyed to the shaft k_7, to which is also keyed the pinion k_8, gearing with the spur-wheel k_9 of the lip-screenings elevator k_{10}, which empties its contents into the screen k_6. This screen k_6 takes out the buckwheat and pea coal, the buckwheat coming out of the end of the outside jacket, and the pea coal passing through the meshes of the single-jacketed portion of the screen. The buckwheat is carried by the chute y_7, and the pea coal by the chute y_8, to the pockets located on each side of the screen. The fine stuff that drops through the meshes of the outside jacket, together with the coarse coal coming out of the front end of the screen, is carried through the hopper y_9, which is only partly shown, to the main elevator u_5.

The breaker engine a is located in the lower part of the breaker, and is protected from the dust, etc., by the roof z_4.

2903. The roofs that cover the different parts of the structure are shown in this view. They are supported by much lighter posts than those used in the lower part of the

breaker structure, and are mortised into transverse beams. The post caps are of the same dimensions as the posts, and support the rafters, which are 4 inches × 6 inches in section, set on end, and the whole covered with No. 26 corrugated iron sheets, as shown in Fig. 1050. The sheets have a lap of at least two corrugations on the sides, and from 4 inches to 6 inches top and bottom. Where the posts are very far apart, the rafters, instead of resting directly on the caps, are supported by corbel blocks, as shown in the figure.

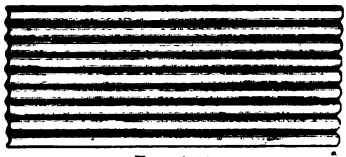

FIG. 1050.

This corrugated iron is manufactured in sheets 6, 7, 8, 9, and 10 feet long, or, if desired, is furnished in special lengths, and is coated with a red mineral paint. The painting is all done by machinery, which is much better than with the hand brush, as it insures an even coating. The sheathing for the different sides is also formed of these corrugated sheets.

Between the upright posts, 3-inch × 4-inch horizontal bracing timbers are placed, which are used as nailers. These are spaced so as to suit the lengths of the sheets.

2907. The Cross-Section.—Fig. 1048 shows the cross-section. Since most of the main features have been previously described, only those which are more clearly shown by this view will be mentioned here. The student should constantly refer to this view when reading the description of the side elevation.

From this cross-section it can be better understood how the large chippers are taken off the platform q_6, and thrown to the chipping platforms q_7, where they are chipped. The lines ——·—— marked a_{14} and a_{15} represent the chutes leading from the chipping platforms q_7 and the openings in the main platform q_6 to the main rolls C, where the pure coal is thrown after the slate has been separated, the rock and slate being deposited in the rock chute.

The circular rings composing figures l, l_1, and l_2 are the

THE NEW YORK
PUBLIC LIBRARY
ASTOR, LENOX
TILDEN FOUNDATIONS

THE NEW YORK
PUBLIC LIBRARY

ASTOR LENOX
TILDEN FOUNDATIONS

projections of the circular screen rings that go to make up the three mud screens l, l_1, and l_2.

C shows a side view of the main rolls with the belt pulley d_1, which is in line with the belt pulley d, keyed to the shaft of the breaker engine.

In this view the line ——·—— marked r_5 shows the roller hopper through which the coal is carried away from under the main rolls C.

The line ——·—— marked r_6, which branches out from r_5, shows the hoppers leading from the roller hopper r_5 to the steamboat screens a_{11} and a_{12}. These screens are shown in this view by the number of circular rings which are the projections of the circular screen rings that make up the screens.

2908. This cross-section will explain how the hopper s_4 for the mud screens l, l_1, and l_2 conducts the particles that drop through the meshes of these screens to the chutes s_6 and s_7, Fig. 1047. These chutes carry the coal until they meet the chutes b_{15} and b_{16}, which are at right angles to the chutes s_6 and s_7. The chute b_{15} carries the coarse coal into the wet egg-coal screens b_{11} and b_{12} on the wet side, while the chute b_{16} carries the fine coal coming from the back end of the mud screens l, l_1, and l_2 to the hopper f_9, under the egg-coal screens b_{11} and b_{12}, through which it reaches the pea-coal screens y_5 and y_6 on the wet side.

The hopper b_{17}, under the steamboat screen a_{11}, catches the coal dropping through the meshes of this screen, and conducts it to the wet egg-coal screens, while the hopper b_{18}, under the steamboat screen a_{12}, catches the coal dropping through the meshes of this screen, and conducts it into the dry egg-coal screens.

2909. In this view the arrangement of the driving pulleys for the steamboat screens a_{11} and a_{12} can be seen to a better advantage. The pulleys a_1 and a_2 are keyed to the main line shaft V. The circles a_3 and a_4 represent the rope pulleys which are keyed to the same shaft as the pinions a_7 and a_8. These pinions mesh with the screen gears a_9 and a_{10}

of the steamboat screens a_{11} and a_{12}. The deflecting pulleys a_5 and a_6 are used to change the direction of the driving ropes which run over the rope pulleys a_1, a_2, a_3, and a_4.

This view also shows how the gearing for the main elevator u_8 is arranged. The small pinion which gears with the large spur-wheel is keyed to the same shaft as the large rope pulley h_1, which is in line with the driving-rope pulley h keyed to the shaft of the breaker engine. These elevators discharge their contents into a chute that conducts them to the steamboat-screen hopper b_{16}, through which they reach the dry egg-coal screens b_{13} and b_{14}.

2910. The side view of the dry egg-coal screen b_{14} is shown in this cross-section. On the plan another dry egg-coal screen b_{13} is shown, which is parallel to b_{14}, and of the same dimensions. These screens are two of the main screens in the breaker, and are partly double-jacketed. They are driven, as shown, by the small pinion b, under the screen, which meshes with the gear of the screen b_{13}, which in turn meshes with the screen gear b_{10} of screen b_{14}. The pinion b is keyed to the same shaft as the belt pulley b_4, which is in line with the belt pulley b_3 keyed to the main line shaft V.

These screens are supported at the back end by hangers, and at the front end by boxes, which rest on the cap shown in the figure.

The coal that reaches this dry egg-coal screen is comparatively dry, as it is the coal which is cracked up by the different rolls in use in the breaker, and that coming from the lip screens under the breaker.

It must be remembered that the coal that drops through the main screening bars does not reach this dry side—only that part coming from the lip screens under the breaker. That which drops through the meshes of the outside jackets of these screens is everything below the size of chestnut, and is conducted by the hopper c_4 to the dry pea-coal screens f_7 and f_8. The coal coming out of the ends of the outside jackets is chestnut. The coal dropping through the meshes

of the single-jacketed portions of these screens is stove coal, while that coming out of the ends of the screens is egg coal.

2911. The chestnut coal and stove coal coming from these egg-coal screens pass into the cast-iron slate-picker screens d_7 and d_8, shown in this figure by circular rings, which are projections of the circular screen rings to which the slate-picker segments are bolted.

The stove coal coming out of the end of the slate-picker screen d_8 passes into the picking chute H. This chute H consists of the two supply chutes c_5 and c_6, which receive the coal, slate, and bone, the intermediate chutes c_7 and c_8, where the picking is done, and the delivery chute c_9, which carries off the coal that has been picked over.

The coal coming from the screen, as shown by the arrows, slides down the supply chutes c_5 and c_6, on one side of each of which the intermediate chutes c_7 and c_8 are placed as close to each other as possible, there being room enough c_{10} between each two picking chutes for a man or boy. The delivery chute c_9 is placed so as to receive the coal coming from the intermediate chutes c_7 and c_8. The supply and delivery chutes have the same inclination, but the former is a little the higher, so as to give a slight inclination to the intermediate chutes, the axis of which is placed at an angle of about 8 to 10 degrees with the horizontal, and 25 to 28 degrees with the supply chute.

2912. The intermediate chutes in many cases are specially designed cast-iron chutes, or can, as shown here, be built of plank and sheet iron. The slate picker, who sits with his face towards the upper end of the chute, allows a thin stream of coal to pass in front of him, cleaning it thoroughly as it passes.

The same coal is handled by one man only, with this exception, that one man is placed at the end c_{11} of the delivery chute to inspect the coal and take out any pieces of slate or bone which may have escaped the regular pickers. On each side of the chute H are the slate chutes c_{12} and c_{13}, into which the slate pickers throw the slate. These continue to the

bottom, where the slate is examined, to see whether it contains any coal or bone, before it passes into the chutes c_{14} and c_{15}, which lead to the waste pocket W, Fig. 1047.

Immediately over the slate chutes, and supported on iron rods, are half round chutes (not shown in the figure), into which the slate pickers throw the bony coal and the pieces that are made up of part slate and part coal. These also continue to the bottom, where they are examined, the pure coal and slate being separated therefrom before they are taken to the bony-coal rolls to be broken.

2913. The chestnut coal coming from the slate-picker screen d_7 is conducted by the rectangular cross-sectioned chute d_{13} to the telegraph w_7, by which it is conducted to the pocket L, without being picked by hand, as the greater quantity of the slate has been removed by the slate-picker screen d_7.

The egg coal coming out of the end of the egg-coal screens passes down the chute d_{14} until it reaches the egg-coal picking chute d_{15}, a part of which is cut off in order to show the pea-coal screens f_8 and f_7.

The egg-coal picking chute and the slate and bony-coal chutes are arranged similarly to the stove-coal chute and the slate and bony coal chutes just described.

The material which slides down the hopper c_4, under the egg-coal screens, passes into the dry pea-coal screens f_8 and f_7. The pea screen f_7 is arranged, as shown in the plan, parallel to the screen f_8, which is shown in this view. Both screens are of the same dimensions, and are driven by the small pinion f_4, which meshes with the screen gear f_5 of screen f_7, which in turn meshes with the screen gear f_6 of the screen f_8. The pinion f_4 is keyed to the same shaft as the belt pulley f_3, which is in line with the belt pulley f_2 keyed to the main line shaft V. These are double-jacketed screens. The coal coming out of the end of the inside jacket is pea coal, that coming out of the end of the outside jacket is buckwheat, and that dropping through the meshes of the outside jacket into the hopper e_8 is everything below buck-

wheat. The screens are supported at the back end by hangers, and the journals at the front end rest in boxes, supported by the cap e_9.

The pea coal coming out the end of the inside jackets passes down the chute e_{10} to the telegraph, which conducts it to the pea-coal pocket *K*.

The buckwheat coal coming out the end of the outside jackets passes down the chute e_{11} to the telegraph, which conducts it to the buckwheat-coal pocket *J*.

The coal that passes through the meshes of the outside jackets into the hopper e_8 passes into the dry rice-coal screen e_7, which is shown in this cross-section by a number of circular rings, which are the projections of the circular screen rings to which the segments are bolted. This screen is driven, as shown, by the small pinion e_5, which meshes with the screen gear e_6. The rope pulley e_3 is keyed to the same shaft that the small pinion e_5 is keyed to, and is driven by the rope pulley e_2, which is keyed to the main line shaft *V*. The deflecting pulleys e_4 are used to change the direction of the rope that runs over the driving pulleys e_2 and e_3. This is a single-jacketed screen; the coal coming out of the end is rice coal, the smallest size prepared. It passes down the chute e_{12} to the telegraph w_7, which conducts it to the rice-coal pocket *I*. That which goes through the meshes is culm; it passes out into the waste pocket *W*, Fig. 1047.

Part of the coal that drops through the meshes of the three mud screens *l*, l_1, and l_2, also that which drops through the meshes of the steamboat screen a_{11}, passes into the wet egg-coal screens b_{11} and b_{12}, which are the other two main screens of this breaker, a side view of them being shown in the cross-section.

The screen b_{11} is arranged parallel to b_{12}, and is of the same dimensions. It is driven by the small pinion b_5, which meshes with the screen gear b_7 of screen b_{11}; b_{11} meshes in turn with the screen gear b_9 of the screen b_{12}. The small pinion b_8 is keyed to the same shaft that the belt pulley b_3 is keyed to, and which is in line with belt pulley *1* keyed to the main line shaft *V*.

The wet egg screens b_{11} and b_{12} are both partly double-jacketed screens. The coal that comes out of the end of the outside jacket is chestnut; that which drops through the meshes of the outside jacket into the hopper f_9, under the egg-coal screens, is everything below the size of chestnut; that which drops through the meshes of the single-jacketed portions of the screens is stove coal, and that coming out of the end of the screens is egg coal.

The back ends of these screens are supported by hangers, and the journals at the front end rest in boxes, which are supported by one of the cross-beams. Directly above the screens water troughs are arranged, similar in construction and arrangement to those above the mud screens l, l_1, and l_2.

The coal coming out of the ends of the outside jackets, and that dropping through the single-jacketed portions of the screens, is conducted by the hoppers f_{11} and f_{12} to the two slate-picker screens q_3 and q_4. The back ends of these screens are shown by the circular rings, which are the projections of the circular screen rings to which the slate pickers are fastened.

As shown, these screens are driven by bevel-gearing at the front end of the screens; the small bevel-gear wheels q_2 and q_3 are keyed to the same shaft as the belt pulley q_1, which is in line with the belt pulley q, keyed to the main line shaft V, and shown back of the egg-coal screen by the dotted lines.

The chestnut coal coming out of the end of the slate-picker screen q_4 is conducted to the chestnut-coal jigs p, p_1, and p_2, and the stove coal coming out of the end of the slate-picker screen q_3 is conducted to the stove-coal jigs t and t_1. This view does not show the chute that conducts the flat slate and coal dropping out through the openings in these slate-picker screens and that coming from the slate screens d_7 and d_8 to the No. 5 slate-picker rolls G.

The coal that drops into the hopper f_9 from the egg-coal screens and that coming down the chute b_{16} from the back end of the counter mud screens are run into the wet pea-coal screens y_5 and y_6.

The pea-coal screen y_5 is of the same dimensions as the pea-coal screen y_6, the side elevation of which is shown in this view, and arranged parallel to it. The screen y_5 is driven by the small pinion y_2 on the top of the screen; this pinion meshes with the gear y_3 of the screen y_5, which in turn meshes with the screen gear y_4 of the screen y_6.

The small pinion y_2 is keyed to the same shaft as the belt pulley y_1, which is in line with the belt pulley y keyed to the main line shaft V.

The two wet pea-coal screens y_5 and y_6 are double-jacketed screens. The coal coming out the end of the inside jackets is pea coal, that coming out the end of the outside jackets is buckwheat, and that dropping through the meshes of the outside jackets into the hopper f_{10} is everything below buckwheat.

The pea coal coming out the end of the screens is carried by the chute f_{13} to the pea-coal jig w_1, and the buckwheat coming out of the end of the screens is carried by the chute f_{14} to the buckwheat jig w.

Directly above these screens are troughs, arranged so that they can receive a sufficient quantity of water to thoroughly clean the coal. What passes down the hopper f_{10} under the pea-coal screens y_5 and y_6 passes into the rice-coal screen x_5.

The chutes g_8 and g_9, in front of the rice-coal screen, catch the coal as it comes out of the end of the screen and conduct it to the chute g_8, which carries it to the telegraph w_7, which conducts it to the rice-coal pocket I.

2914. In this view, p, p_1, and p_2 show the front view of the chestnut-coal jigs. They may be divided into two parts, the upper being the machinery for moving the pistons r_2–r_4, and the lower, p–p_2, the jigs proper.

In constructing them, a water-tight tank is built that is divided by partitions which need be only approximately water-tight, as there is water on both sides of them. A detail of the general construction of these jigs is shown in Fig. 1032, with the one exception of the driving gear for the pistons. Here the pistons r_2–r_4 are operated by cams

keyed to the line shaft of the jigs, driven by the pulley r_1 keyed to the same shaft, which is in line with and driven by a pulley keyed to the main line shaft V.

From this view the arrangement of the drag-lines t_3 can be seen; they run over the sprocket-wheels which are driven by the gears o_2 and the rope pulley o_1, which is in line with and driven by the rope pulley o keyed to the main line shaft V.

The jigs t and t_1 are used for stove coal; s_2 and s_3 show the pistons for these jigs, which are driven by the pulley s_1, in line with the belt pulley keyed to the main line shaft V. The drag-lines t_4 for these jigs are driven by the gears u_2 and the rope pulley u_1, which is in line with the pulley u keyed to the main line shaft V. The deflecting rope pulleys u_3 show the position of the pulley that is used to guide the rope that runs over the pulleys u and u_1, above the pea screens y_5 and y_6.

The jigs w and w_1 are for buckwheat and pea coal, and v_2 and v_3 show the pistons for these jigs, which are driven by the pulley v_1, in line with the driving pulley v on the main line shaft V. The drag-lines t_2 and t_3 are for the buckwheat and pea coal jigs, respectively. These drags are driven by the gearing z_2, the small pinion of which is keyed to the same shaft as the rope pulley z_1, which is in line with and driven by the rope pulley z keyed to the main line shaft V of the breaker. The deflecting rope pulleys z_2, which are shown here in relation to the driving pulleys z and z_1, are used to keep the driving rope away from the side of the rice-coal screen x_5.

The stove, pea, and buckwheat coal jigs are similar in construction and arrangement to the chestnut-coal jigs, the details of which are shown in Fig. 1032.

2915. For this wet side the picking chutes for the coal as it comes from the screens and different drag-lines are not shown, but are the same in construction and arrangement as those used on the dry side.

In this cross-section, w_4 shows the level of the floor in the main picking room.

The coal that comes out of the end of the three counter mud screens l, l_1, and l_2 is led by chutes, which are represented in this view by the lines ——·—— and marked h_2, h_3, and h_4. These chutes convey the coal into the main picking chute r (marked r_{11} in Fig. 1047), where it is picked by hand and then passed into the chute h_5, which conducts it to the No. 2, or monkey rolls D, a side view of which is shown in this cross-section.

2916. This view shows the position of the rolls D, the driving pulley n_1, and the gearing. The pulley n_1 is in line with the driving pulley n keyed to the main line shaft V.

The coal, upon leaving the monkey rolls D, passes into the broken-coal screen k, which is shown in this cross-section by a number of circular rings, which are the projections of the circular screen rings to which the segments are bolted. This view shows the miter gear j and the rope pulley i_1, which is in line with the rope pulley i keyed to the shaft of the breaker engine, all of which are used in driving the broken-coal screen k. From this view it can be better understood how the broken coal, as it comes from the end of the broken-coal screen, slides down the chutes leading to the broken-coal drag-line g_5, or to the No. 3 rolls E.

This cross-section shows the side view of the No. 3 or broken-coal rolls E, together with the belt pulley e_1, which is in line with the pulley e keyed to the shaft of the breaker engine.

The broken-coal drag-line g_5, which conveys the coal coming from the broken-coal screen k, is driven by the gearing g_4, which is in turn driven by the pulley g_3; g_3 is in line with the belt pulley g_2 keyed to the shaft that drives the broken-coal screen.

The coal, upon leaving the drag chute h_6, through which it is conveyed, passes into a chute h_7, represented by the line ——··—— and marked h_7, from which it is picked before it passes into the broken-coal loading pocket O.

The rolls F show the side view of the No. 4 rolls, known as the bony-coal rolls. They are driven by the rope pulley

f_1, which is in line with the rope pulley f keyed to the shaft of the breaker engine.

The rolls G show the side view of the No. 5 rolls, known as the slate-picker rolls. They are driven by the rope pulley g_1, which is in line with the rope pulley g keyed to the shaft of the breaker engine.

As shown, both the No. 4 and No. 5 rolls are on the same level, and the coal coming from them is led by the one hopper to the main elevator u_9. The hopper is shown here by the line —— – —— marked u_9.

2917. In this cross-section is shown the end view of the lump-coal screenings elevator d_{12}. The gearing d_{11} consists of the small pinion gearing into the spur-wheel keyed to the same shaft as the sprocket-wheels over which the elevator-buckets run. This elevator is driven by the pulley d_{10}, which is in line with the pulley d keyed to the shaft d_4, that drives the dry slate-picker screens. As has already been stated, the coal is conveyed to these elevators by a small dump-car running between the lump-coal chute and the elevator.

A side view of the main lip-screenings elevators k_{10} is shown in this cross-section. This elevator, as well as the lump-coal screenings and main elevators, is of the link and bar type.

At the bottom of the breaker a portion of the continuous wall B is removed, so as to show the location of the bottom elevator wheels. These wheels are located below the loading tracks, so that condemned coal can be unloaded from the railroad-car, run into the elevator k_{10}, and hoisted into the breaker to be re-prepared.

The small pinion k_8, the spur-wheel k_9, and the driving pulley k_2, all of which are used in the driving-gear of this elevator, are shown in this view. They are driven by the rope pulley k_1, which is keyed to the driving-shaft of the wet egg-coal screens, the deflecting pulleys k_3 being used to change the direction of the driving rope running over the pulleys k_1 and k_2. The lip-screenings separator k_6 is shown

in this cross-section by two sets of circular rings, which are the projections of the circular screen rings to which the segments are bolted. The small pinion k_4 meshes with the screen gear k_5, and is hidden by the pinion k_6, which is of the same dimensions and keyed to the same shaft. The chutes y_7 and y_8 conduct the buckwheat and pea coal away from the lip-screenings separator k_6.

2918. In this cross-section, a shows an end view of the breaker engine, while b shows the front view of the fly-wheel keyed to the breaker-engine shaft, and c and c_1 show the main belt pulleys keyed to the breaker-engine shaft. These pulleys are in line with the belt pulleys c_2 and c_3 keyed to the main line shaft V.

The steamboat and broken coal coming from the steamboat screens a_{11} and a_{12} is run into the picking chutes r_9 and r_{10}, and picked. These chutes are represented in this view by the line ——··—— and marked r_9 and r_{10}.

The steamboat-coal coming from screen a_{11} after it is picked passes into the chute h_{11}, which conducts it to the steamboat loading pocket P.

The chute h_{12} conducts the picked steamboat-coal coming from screen a_{12} into the chute h_{11}. The broken coal coming from the steamboat screen a_{12}, after it has been picked in r_{10}, passes into the chute h_{13}, which conducts it to the chute h_7, where it is re-picked before entering the broken-coal loading pocket O. The broken coal that is picked in chute r_{10}, coming from screen a_{11}, passes into the chute h_{14}, which conducts it to chute h_{13}.

In case there is a limited sale or no sale at all for steamboat and broken coal, the chute h_{15} is so arranged that by sliding a plate in the bottom of the chute h_{11}, the steamboat-coal coming from the two steamboat screens a_{11} and a_{12} will pass down chute h_{15}, and from there into the chute h_5, which leads to the monkey rolls D.

For broken coal there is a similar arrangement in the bottom of the chute h_{13}, which allows the coal to pass into chute h_6, through which it reaches the monkey rolls D.

2919. The pockets for the prepared sizes are sixteen in number, all of which are shown in this view. *I* shows the loading pockets for rice coal, *J* for buckwheat coal, *K* for pea coal, *L* for chestnut coal, *M* for stove coal, *N* for egg coal, *O* for broken coal, and *P* for steamboat-coal.

In the pocket *L* for chestnut coal, on the dry side, is shown the arrangement of the telegraph w_7, which is located in the center of the pocket. All the other telegraphs in the pockets are arranged in the same way. The floors of the pockets are lined with birch boards i_2. The divisions i_3 between the pockets are double-boarded.

In this view one of the loading gates 4 is shown open, allowing the chestnut coal to pass over the lip screen i_6. The gate 4 works in cast-iron slides.

The fine coal that drops through the lip screen i_6 is taken up by the drag-line k_{22}, which runs over the sprocket-wheels k_{18} and k_{19}. The drag-line k_{23} running over the sprocket-wheels k_{20} and k_{21} conveys the lip screenings from the wet side. Both of these drag-lines are driven by the pulley k_{11} keyed to the lip-screenings elevator driving-shaft, which is in line with the rope pulley k_{12} keyed to the same shaft as the gear-wheel k_{13}, which gears with the wheels k_{14} and k_{15}, and they in turn drive the bevel-gears k_{16} and k_{17}, which operate the drag-lines k_{23} and k_{22}.

Directly above the lip screens, on both the wet and the dry sides, a trough or pipe is arranged, so that the coal can be washed as it is being loaded into the car for shipment.

In this view all the roofs that would interfere with the view of the machinery have been removed. *Q* shows the roof over a portion of the rock and lump coal chute. *R* and *S* are roofs that cover a portion of the breaker proper, and can be better understood by examining the side view of the breaker in connection with this cross-section.

2920. Lighting the Breaker.—No attempt has been made to show how the breaker is lighted. This is one of the most important items in the construction of a breaker. The main point in the interior arrangement is to have as

much available space as possible, with an abundance of light, especially in the slate-picking rooms, in order to economically and carefully prepare coal for the market.

It has been found by experience that cramped-up breakers are a source of great annoyance and expense in the proper preparation of coal.

There are different ways of arranging window-sashes. Those sliding horizontally will be found very convenient, as they can be most readily opened during the summer months for the purpose of increasing the ventilation. In the picking rooms the windows are generally placed from 5 to 6 feet above the floor level, so that the attention of the slate pickers will not be drawn from their work by any outside attraction.

The platform is another part of the breaker that should be well lighted and ventilated. The parts of the breaker that present any danger to the parties in charge of the machinery should be well lighted. To still further guard against accidents, hand-railings should be placed along the sides of the different walks in the breaker.

2921. Heating.—In the plans of this breaker no method has been shown as to how the breaker is heated. Usually, during the winter months breakers are heated either by steam or by a number of large cast-iron stoves. The latter method of heating is in many cases very unsafe, and to guard as much as possible against fire, it is being replaced by steam heat. Where steam is used, coils of gas-pipe are connected with one or two old cylindrical boilers, the steam being obtained from the different exhaust-pipes of the engines about the colliery. In case it is necessary, a connection, in addition to the above, is made direct with the steam-boilers.

2922. Ventilation.—In breakers where the coal is prepared dry there are large quantities of dust, and in many places the dust is so thick that it is almost impossible for the slate picker to distinguish coal from slate. At such places, small exhaust-fans are sometimes placed, either at the top or the bottom of the breaker, with air-pipes leading to the different parts where the dust is thickest. These fans

draw off the dust from the breaker and discharge it into boxes, where it is dampened by a jet of steam, or into a quantity of water; more frequently, however, they discharge it directly into the open air.

Another method of getting rid of the dust is by stacks leading away from the different rolls to the open air.

In many breakers, and especially in those where water is used, the only method of ventilating is by means of the windows.

THE PREPARATION OF COAL IN THE BREAKER.

2923. Figs. 1046, 1047, and 1048 illustrate this description. In the plan, Fig. 1046, the line

——·——·—— indicates the course of coal during preparation;

——- - —— indicates the course of the prepared coal;

—— —— —— indicates the course of the slate and refuse;

——- - - - - indicates the course of the bony coal to be broken.

2924. The mixture of coal, slate, and dirt arrives at the dumps n_8 and a_{12} in mine-cars, where it is dumped; the coal first passes over the main dump-chute bars n_1–n_{10}, which allow most of the smaller coal to pass through into the mud-screen pocket o_3. The coal that does not drop through these bars passes on to the next set of bars n_{11}, so set as to allow a space of 5 inches between each two of them, and that which drops through is led to the main crushers *C*. Practically all the coal smaller than lump coal passes through these bars, and only lump coal arrives at the platform q_6. The lump coal that arrives on the platform q_6 is divided into three sorts, the first being the slate, which is put into the slate chute q_9, a division in the lump-coal chute; the second consists of those lumps which have been referred to as chippers, containing slate and coal. These lumps are chipped on the platforms q_7; that is, the slate, which can be easily detached from them with a pick, is sent to the slate chute q_9, while

the remaining coal is thrown into the chute a_{14} or a_{15}, Fig. 1048, leading to the main crushers C. The third product consists of more or less pure coal; this is examined by the platform men, and that known as the **rough,** which is not suitable for lump coal, is shoved into one of the holes in the platform opening into the main rolls C. Such lumps as are suitable for lump coal are known as the **glassy,** and are pushed over the plates q_8 to the lump-coal chute q_9, and are loaded out at q_{18} into the railroad-cars for shipment.

2925. All the coal that has gone through the main dump-chute bars q_7–q_{10} is accumulated in the mud-screen hopper or pocket o_3. From this the coal is conveyed to the three mud screens l, l_1, and l_2, the feeding being regulated by means of gates at the bottom of the pocket o_3. The coal that enters these three mud screens is washed by means of the water that pours over the sides of the three troughs erected above the screens, which have already been explained. This washing assists greatly in the separation, more especially in that of the smaller sizes.

In the mud screens l, l_1, and l_2, the first segments extract all sizes below chestnut coal, which are conducted by the chute s_7, Fig. 1047, until they reach the chute b_{16}, Fig. 1048, leading to the hopper f_9, under the egg-coal screens; this hopper then conducts them to the wet pea-coal screens y_5 and y_6.

The other two segments on the mud screens l, l_1, and l_2 take out everything below the size of broken coal, which is conducted by the chute s_8, Fig. 1047, to the chute b_{15}, Fig. 1048, through which it reaches the wet egg-coal screens b_{11} and b_{12}.

2926. The coal coming out of the ends of these three mud screens generally consists of long, flat pieces; this coal must first be broken before it can be put into marketable shape; it is conducted by the chute r_{11}, Fig. 1047, and r, Fig. 1048, to the slate-picking room r_{12}, where men and boys alongside of the chute remove the slate. From this room the

coal passes into the chute h_9, Fig. 1048, which conducts it to the prepared-coal or monkey rolls D.

The coal from the platform q_9, together with that from the bars n_{11}, which has been broken, passes from the rolls C into the roller hopper r_9, which conducts it to the chutes r_8 leading to the two steamboat screens a_{11} and a_{12}. These screens make steamboat and broken coal, and are double-jacketed, the steamboat coming out the end of the inside jacket, and the broken coal out the end of the outside jacket; what drops through the meshes of these outside jackets is everything below the size of broken coal.

The steamboat and broken coal coming out the end of the screens a_{11} and a_{12} is conducted by the chutes r_9 and r_{10} to the slate-picking room r_{12}, where the slate and bony coal are removed. The slate goes to the waste pocket and the bony coal into the chute r_{11}, Fig. 1047 (or r, Fig. 1048), which conveys it to the monkey rolls D. The steamboat-coal that is picked goes to the steamboat pocket P, and the broken coal goes to the broken-coal pocket O, unless there is no sale for the same, in which case it is conducted by the chutes h_{10} and h_{13} to the monkey rolls D, the operation of which has already been described.

The coal that drops through the meshes of the outside jackets on the steamboat screens a_{11} and a_{12} is everything below the size of broken coal, a portion of it going to the dry egg-coal screens b_{13} and b_{14}, and the remainder going to the wet egg-coal screens b_{11} and b_{12}; hence, the coal to be prepared wet in this breaker is all that coming from the three mud screens l, l_1, and l_2 and a portion of the coal smaller than broken that is crushed by the main rolls C.

2927. All this coal, with the exception of that below the size of chestnut, from the mud screens l, l_1, and l_2 passes into the wet egg-coal screens b_{11} and b_{12}; these screens make egg, stove, and chestnut coal. The egg coming out over the end of the screens runs directly to the picking chutes, where the slate and bone are removed by the slate pickers in the main picking room, the floor of which is shown by w in

Fig. 1047 and w_4 in Fig. 1048. From the picking chutes it goes direct to the pocket N, from which it is loaded out over the lip screens into the railroad-cars for shipment.

2928. The stove coal coming from these egg-coal screens is conveyed by the hopper f_{11} to the slate-picker screen q_3, where a large part of the flat slate and coal is removed. The coal coming from the slate-picker screen q_3 is conveyed by chutes to the stove-coal jigs t and t_1, where it is washed and the larger part of the slate removed; from these jigs the coal is conveyed by the drag-lines t_4 to the picking chutes, where the very light flat slate that has not been removed, either by the slate-picker screen or jigs, is picked out by the slate-picker boys; they also remove the bony coal that would interfere with the sale of the coal. The coal, after it has been picked, passes directly to the stove-coal pocket M.

2929. The chestnut coal comes out the end of the outside jacket of these screens, and is conducted by the chute f_{12} to the slate-picker screen q_4, where a large part of the flat slate and coal is removed. The coal coming from this slate-picker screen is conveyed to the jigs p, p_1, and p_2, which are known as the **chestnut-coal jigs.** Here the coal is washed and the greater part of the slate removed. The coal from these jigs is conveyed by the drag-lines t_5 to a chute which leads directly to the chestnut-coal pocket L. That which drops through the meshes of the outside jacket on these egg-coal screens b_{11} and b_{12} is everything below the size of chestnut, and is conveyed with the same product coming from the mud screens l, l_1, and l_2 through the hopper f_9 to the wet pea-coal screens y_5 and y_6, which make pea and buckwheat coal. The pea coal coming out the end of the inside jackets of these screens is conveyed by the chute f_{13} to the pea-coal jig w_1, where it is washed and the greater part of the slate removed.

The coal from this jig is conveyed by the drag-line t_2 to a chute which leads directly to the pea-coal pocket K.

2930. The buckwheat coal coming out of the end of the outside jacket is conveyed by the chute f_{14} to the buckwheat-coal jig w, where it is washed and the greater part of the slate removed. The coal from this jig is conveyed by the drag-line t_2 to a chute which leads directly to the buckwheat-coal pocket J.

That which drops through the meshes of the outside jacket on these screens is everything smaller than buckwheat, and is conveyed by the hopper f_{15} to the rice-coal screen x_6 which makes the rice coal. The rice coal that comes out of the end of this screen is conveyed by the chute g_8 to the rice-coal pocket I. What drops through the meshes in this screen is culm or waste, and is conveyed by the water that is used on the screen, through troughs U, Fig. 1046, to the slush bank, where it is deposited.

2931. The large coal coming from the front end of the mud screens l, l_1, and l_2, together with that, when there is no sale for steamboat and broken, coming from the ends of the steamboat screens a_{11} and a_{12}, is all broken up by the monkey rolls D, and is conveyed by the roller hopper w_2 to the broken-coal screen k which makes broken coal. The broken coal coming out the end of the screen slides down a chute leading to the broken-coal drag-line g_9, which conveys the coal to the chute h_1, Fig. 1048, where it is picked before entering the broken-coal pocket O. That which drops through the meshes in the broken-coal screen k is everything below the size of broken coal, and is conveyed by the hopper u_6 to the main elevator u_8. When there is a limited sale, or no sale for broken coal, it is run into the No. 3 rolls E, which break it into sizes below broken coal. These rolls are also so arranged that the coal can be broken into sizes below egg coal. The coal coming from these rolls is conveyed by the roller hopper u to the main elevator u_8.

2932. All the coal that is elevated by the main elevator u_8, and that portion coming from the steamboat screen a_{12}, is conveyed by the hopper b_{16}, under the steamboat screen a_{13}, to the dry egg-coal screens b_{13} and b_{14}. The coal that

reaches these screens is, practically speaking, dry, and in its preparation no water is used until the coal is being loaded into the railroad-cars for shipment; hence, this side of the breaker that is about to be described is the *dry side* (see Fig. 1048).

The dry egg-coal screens, b_{13} and b_{14} prepare egg, stove, and chestnut coal. The egg coal coming out of the end of these screens is conducted by the chutes d_{14} to the picking chute d_{15}, where the slate and bone are taken out before entering the egg-coal pocket *N*.

2933. The stove coal coming from the three segments that compose the single-jacketed portions of these screens is conducted to the slate-picker screen d_9, where the greater part of the flat slate and coal is taken out. The stove coal as it comes from this slate-picker screen passes into the slate-picking chute *H*, where the slate and bony coal are picked out before allowing the coal to enter the stove-coal pocket *M*. The coal coming out the end of the outside jacket of these screens is chestnut coal, and it passes to the slate-picker screen d_7, where the greater part of the flat slate and coal is removed. The coal coming out of the end of this screen is conducted by the chute d_{12} directly to the chestnut-coal pocket *L*. What drops through the meshes of the outside jacket of these screens b_{13} and b_{14} is everything below chestnut coal, and is conducted by the hopper c_4 to the two pea-coal screens f_7 and f_8 which make pea and buckwheat coal. The pea coal coming out of the end of the inside jacket of the screens is conveyed by the chute e_{10} to the pea-coal pocket *K*. The buckwheat coming out of the end of the outside jacket of these screens is conducted by the chute e_{11} to the buckwheat-coal pocket *J*.

What drops through the meshes of the outside jacket of these screens f_7 and f_8 is everything below the size of buckwheat, and is conveyed by the hopper e_8 to the rice-coal screen e_{12}, which makes rice coal. The rice coal is conveyed by the chute e_{13} to the rice-coal pocket *I*. What drops through the meshes of this screen is culm, or waste, which

goes directly to the waste pocket *W*, Fig. 1047, located underneath the screen.

2934. By examining the plan, Fig. 1046, it will be seen that all the bony coal coming from the picking chutes is conveyed to a point *T* in the breaker by a small dump-car, and dumped into a chute leading to the No. 4 rolls *F*, which are known as the bony-coal rolls. These rolls break the bony coal into sizes below stove coal; the coal is then conveyed by the roller hopper u_8, Figs. 1047 and 1048, to the main elevator u_5, which elevates it, the preparation being performed by passing through the screens on the dry side. In this same plan it is shown that the whole of the flat slate and coal coming from the four slate-picker screens d_1, d_2, q_4, and q_5 is conveyed by chutes to the No. 5 rolls *G*, known as the slate-picker rolls, and is broken up by these rolls into all sizes below chestnut coal. The roller hopper u_9 conveys everything from these rolls to the main elevator u_5; this product is also prepared by passing through the screens on the dry side.

2935. The pieces that drop through the different lip screens, as the coal is being loaded into the railroad-cars for shipment, vary in size, for it will be noticed upon examining the lip screens over which the steamboat-coal passes, that the spaces between the bars are much greater than those over which the chestnut coal is made to pass. All the coal coming from these lip screens is conveyed by the drag-lines k_{22} and k_{23} to the elevator k_{10}. In the drag chutes x_3, through which the drag-lines k_{22} and k_{23} work, are a number of perforated plates which take out the water that is used in washing the coal as it is being loaded into the railroad-cars.

2936. The coal that is elevated by the elevator k_{10} passes into the lip-coal separator k_6 which makes pea and buckwheat coal. The buckwheat coal comes out the end of the outside jacket on this screen, and is conveyed by the chute y_7 to the buckwheat-coal loading pocket *J*. The pea coal drops through the meshes of the single-jacketed portion

of this screen, and is conveyed by the chute y_8 to the pea-coal loading pocket K. What drops through the meshes of the outside jacket, and that coming out the end of the screen k_9, is conveyed by the hopper y_9, Fig. 1047, to the main elevator u_5, and receives preparation on the dry side.

In the plan it is shown that the lip-screenings coal coming from the lump-coal chute, that is elevated by the elevator d_{12}, first passes into the broken-coal screen, and finally reaches the main elevator u_5, where it is prepared on the dry side.

2937. The side elevation, Fig. 1047, shows that the slate from the different jigs, and that coming from the different picking chutes, together with the waste coming from the dry rice-coal screen, is all conveyed to the large waste pocket W, and is loaded, together with the rock that comes from the platform and collects in the rock chute, in dump-cars that run over the double tracks formed by the rails l_9, l_{10}, and l_{11}.

2938. The refuse coming from the wet rice-coal screen is carried off by troughs, which are indicated in the plan, Fig. 1046, by the line ——— and marked U. The water coming from the overflows of the jigs also carries a certain amount of sediment. This water, with that coming from the slush boxes of the jigs, is conveyed to the trough U leading to the slush bank.

2939. In Figs. 1046, 1047, and 1048, no attempt has been made to show where the coal that is used in generating steam for the plant is taken from. This will depend upon what size is to be burned. If it is rice coal, it would no doubt be taken from the rice-coal screen e_7 on the dry side; in case it is buckwheat, the buckwheat coal coming from the pea-coal screens f_7 and f_8 would suggest itself; or, as is very often the case, the slate-picker stuff coming from the slate-picker screens is used.

PERCUSSIVE AND ROTARY BORING.

INTRODUCTION.

1. In prospecting for minerals and in mining operations, as well as in tapping the natural supplies of water, gas, and oil, some method of boring through the strata is necessary.

Bore holes of varying diameters and lengths, ranging from those of small diameters and short lengths for blasting purposes, to those of comparatively large diameters and great lengths for other purposes, play important parts in all mining operations. It is therefore important that the student should thoroughly understand the subject, so that he may know which method is best for any particular case.

2. The following are the principal uses of bore holes:

1. For finding the location of useful minerals, the thickness and nature of the deposits, and the inclination of the deposits.

2. For obtaining petroleum, natural gas, or salts in solution.

3. For sinking artesian wells, ropeways for underground haulage, passages for steam or water pipes, passageways for signal or electric-power wires, and for flooding mine fires. Bore holes have also been effectively used to drain old gobs of dangerous accumulations of gas.

4. For connecting live mine workings with adjacent old workings, which may be filled with accumulations of gas or water, and for draining off such accumulations in a safe manner.

5. For sinking shafts or slopes or driving tunnels through rock, and for removing overlying strata in stripping operations.

For notice of the copyright, see page immediately following the title page.

6. For driving entries, levels, headings, etc., in the vein, lode, or seam, and in enlarging such passageways by ripping down overlying or blowing up underlying strata.

7. For extracting the useful minerals in rooms, breasts, stopes, winzes, etc., or in open cuts or quarries.

3. There are two general methods of boring, viz., percussive and rotary boring. The former, being the simpler method, will be considered first.

PERCUSSIVE BORING.

4. Any form of boring by a succession of blows is called **percussive boring.** The kinds of drills used are: **hand drills,** which comprise ordinary bar drills operated by hand and hammer; **jumper** or **churn drills,** which are long and heavy bar drills operated entirely by hand; and **power drills,** which are operated by steam, air, or electricity. In many localities the small hand drills are also called "jumper" drills.

5. The cutting tools or bits used in percussive boring may be termed **intermittent cutters,** the characteristics of which are stated as follows:

1. They cut along lines parallel to the direction of the holes.

2. They cut out a chip at each stroke, whose horizontal section is a small sector of a circle; it therefore requires several strokes of the drill to advance the hole a distance equal to the depth of one chip.

3. The depth of the cut made by each successive stroke is proportional to the energy applied, and inversely proportional to the hardness of the rock.

6. In order to do effective work with a percussive drill, the cutting must be done in steps inversely proportional to the hardness of the rock. This is accomplished by turning

the drill through the proper angle at each stroke. In hand drilling the driller turns the drill with one hand and strikes with the other, or one man turns the drill while another strikes it. In machine drilling the turning is done automatically. In either case the angle through which the drill turns must be smaller in hard rock than it is in soft rock—the width of the chip, of course, varying with the angle.

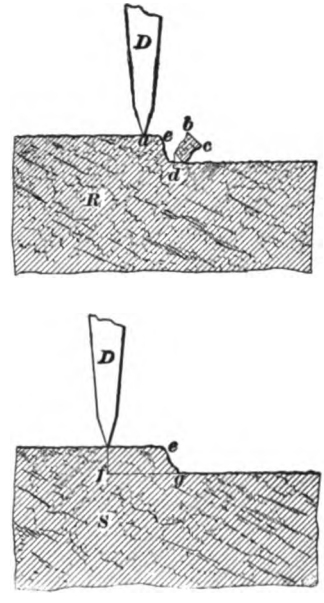

FIG. 1.

7. In turning a percussive drill, the greatest arc through which the outside edge of the drill is turned should not be greater than the depth of cut. Fig. 1 shows two pieces of rock *R* and *S*, each being acted upon by chisels in a manner somewhat similar to the action of a percussive drill in a bore hole. At *R* the chisel *D* cuts off a chip, the width *b c* or *a e* of which is less than the depth *b d*, while at *S* the chisel is so placed that the width of the proposed chip *f g* is greater than the depth *e g*, and its only action is to slightly powder the rock under its edge. This shows in a graphical manner that in the first case the resistance to chipping is overcome, while in the second case the resistance of the rock prevents chipping.

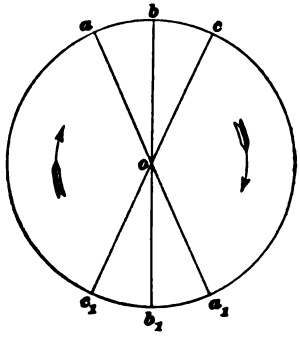

FIG. 2.

8. Fig. 2 shows some of the different positions of the cutting edge of a bit when drilling a hole and being turned as

indicated by the arrows. The relation of these positions may be stated as follows:

1. The cutting edge of the bit always coincides with the diameter of the hole. Thus, $a\,a_1$, $b\,b_1$, and $c\,c_1$ pass through o, the center of the hole.

2. When the bit cuts off perfect slices, they are, in plan, sectors of a circle.

3. The angle included between successive cuttings should be such that the maximum width of a slice will not be greater than the minimum depth of the cut.

9. Fig. 3 shows the bottom of a hole when the bit and all the debris have been removed. That portion of the face

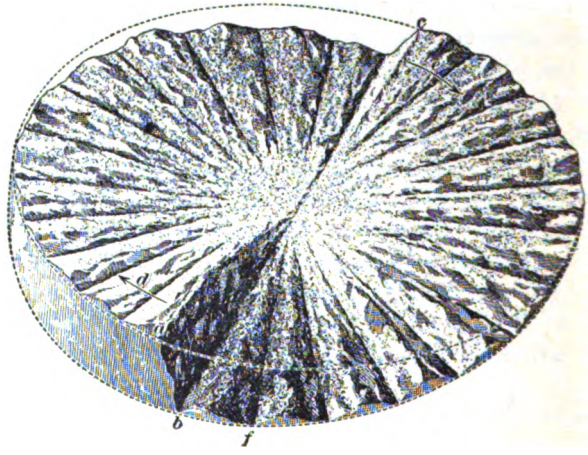

FIG. 3.

of the cut from the center to a is advancing in the opposite direction from that from the center to c, as shown by the arrows d, e. The depth $a\,b$ of the cut is greatest at the side of the hole, and becomes less towards the center, where it is very shallow. It is therefore evident that the center of the cutting edge of the bit does less work per blow than the extremities, and the work done by the cutting edge greatly increases from the center towards the ends. For this reason and the fact that the ends or corners of the cutting edge of a bit are the weak points, care should be taken in shaping and tempering.

10. In boring holes of different diameters in the same rock, the bit should be turned so that the outside arcs in all cases are equal. In other words, the greater the diameter of the hole the less the angle through which the bit is turned, providing the power applied remains constant. Suppose that it was found most effective to turn a bit through the angle *a o b*, Fig. 4, in a hole whose radius is *o a*; then in a hole whose radius is double *o a*, or *o c*, the bit should be turned through the angle *c o d*, making the arc *c d* equal to the arc *a b*. If, in drilling the large hole, the bit was turned through the angle *a o b*, or, which is the same thing, *c o e*, the rock would simply be crushed along the line *o e* instead of a slice being cut off, as would be the case if the drill was turned through the angle *c o d*.

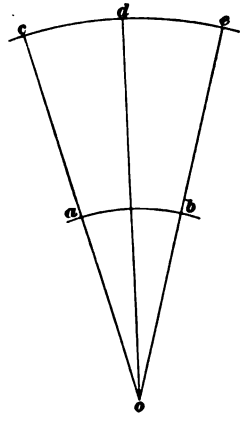

FIG. 4.

KINDS OF BITS.

11. The form of the cutting edge of a bit depends upon the nature of the rock, the size of the hole, and the power employed. For small holes, drilled by hand, in coal, the straight or concaved sharp-edged chisel is generally used. For drilling with machines or with hammers, these forms of bits are not suitable, as the energy supplied would act on them percussively with great force, and as a result the extremities of the edges would soon be blunted or broken off.

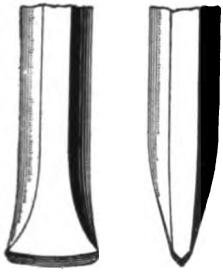
FIG. 5.

For rock-drills driven by hammer, and, under some conditions, for use with machines, the best form of edge is either the tapered bit or one with a convex edge, as shown in Fig. 5. These shapes protect the extremities of the cutting edge, where the greatest resistance is encountered.

12. In addition to the cutting edge being made of such form as to best withstand the extra work done at its extremities, it should be sharpened to suit the hardness of the rock to be bored. For instance, the cutting edge of the bit should be made so as to form in cross-section an acute angle for boring in coal or soft rock, and an obtuse angle for boring in hard rock. In any case the angle will depend upon the rock to be drilled. An obtusely sharpened edge would be as ineffective in soft rock as an acutely sharpened one in hard rock.

13. A soft sandstone, however, requires a blunter edge than a hard limestone, because it is made up of very hard grains of sand comparatively loosely cemented together, and more easily separated by pounding than by cutting. Fig. 6 shows a flat-edged bit frequently used for drilling in soft friable sandstone. As may be seen, the side *a b* and the end *c d* are both straight. It must not be supposed that a flat-edged bit is best in all cases to drill in sandstone. In arenaceous limestone, which is called sandstone, and calcareous sandstone a flat-edged bit would be very inefficient, or possibly useless. Experience and sound judgment together enable one to determine when it is most advantageous to use a flat-edged bit even in friable sandstone.

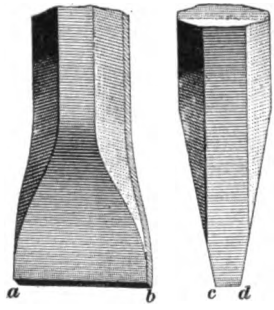

FIG. 6.

14. Fig. 7 shows an ordinary straight-edged bit in which the material is reduced at the middle of each side. This allows the debris to free itself readily at the center of the hole, where it would be pressed over and over again were this provision not made. This improvement is also advantageous in the flat-edged bits for drilling many sandstones or rock like the sandstones of Northeastern Ohio.

15. Fig. 8 shows a cross or + bit very commonly used in percussive power drilling. It is evident that the cutting edge of this bit is double that of the ordinary straight-edged bit, and that double the work can be done with it without detriment to its edges. Fig. 9 shows an **X** bit, which is also quite extensively used. It gives better results in many cases than the + bit, because the latter often rifles the hole, and thereby reduces the force of each blow. This, however, is not likely to occur when drilling in hard granitic rock, for the angle through which the bit is turned at each blow is small, and the surface of the hole is consequently made comparatively smooth and round. Fig. 10 shows a **Z** bit, which is an excellent form for equally distributing the work along the cutting

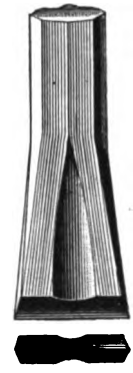

FIG. 7.

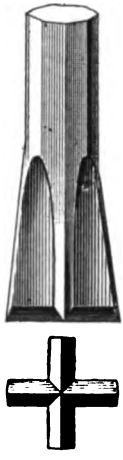

FIG. 8.

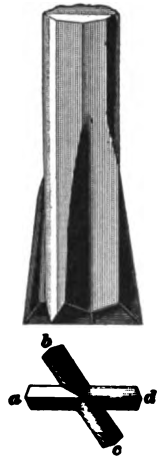

FIG. 9.

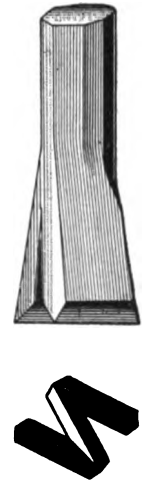

FIG. 10.

edge, and is especially efficient in soft rock; the only objection to it is the difficulty with which it is sharpened.

16. When drilling in hard rock, the straight-edged bit, Fig. 5, is liable to become wedged in a narrow crack, and

render the drilling difficult. To overcome this tendency, a bit with a curved edge, as shown in Fig. 11, is used. Such a form enables the bit to ride the narrow crack and prevents sticking in the hole. This bit is formed simply by the blacksmith bending the extremities of the finished straight-edged bit in opposite directions, care being taken not to bend them too far and thereby cause portions of the sides of the tapered parts to rub the side of the hole.

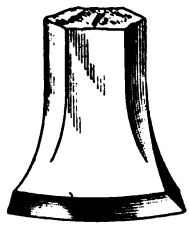

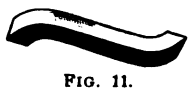

FIG. 11.

17. The ordinary straight-edged bit can be made or dressed up on an anvil with a hammer, but in order to shape and dress up the +, X, or Z shaped bits, special tools are required. Those used to make or dress up the + bits are shown in Fig. 12. The swage (*a*) is placed in the hardy-hole in the face of the anvil, and is used in connection with the spreader (*e*) to form the wings of the bit roughly, which are finally finished with the flatter (*d*) and the sow (*b*), which is

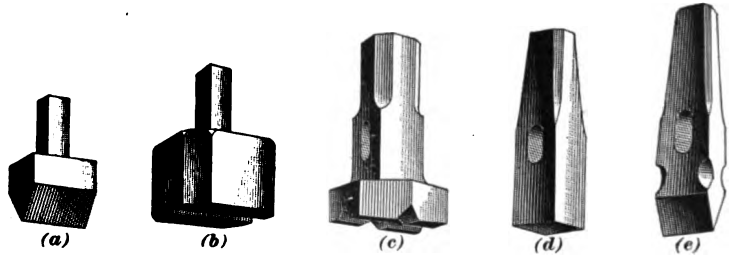

FIG. 12.

placed in the hardy-hole after the swage is removed. The dolly (*c*) is used to give the proper shape to the cutting edges of the bit. When X bits are sharpened, the grooves in the dolly must cross each other obliquely, or at such an angle as will suit the cutting edges of the bit.

THE WEIGHTS OF DRILLS AND HAMMERS.

18. It is important that the driller should know approximately the proper relative weights of hammer and drill, that he may obtain the best results. If a light hammer is

used to strike a relatively heavy drill, most of the energy will be dissipated in heat and vibration, and, of course, the longer the drill for the same weight the greater the loss.

19. The dissipation of energy that takes place when a hammer strikes a drill is proportional to the weight of the drill divided by the weight of the hammer. Thus, if a 3-pound hammer strikes successively a 9, 24, and 36 pound drill, the amounts of energy dissipated at the moment of impact will be proportional to $\frac{9}{3} = 3$, $\frac{24}{3} = 8$, and $\frac{36}{3} = 12$, respectively. Therefore, it is evident that the lighter the drill, within certain limits, the less the loss of energy through heat and vibration. It is not necessary to be able to determine the exact efficiency of a hammer and drill, but by observing the above statement in relation to the dissipation of energy, a driller can, after a little experience, easily decide upon the best combination of hammer and drill for any particular work. In order that the student may fully understand the consequence of using an inefficient combination of hammer and drill, a few illustrations of the way in which energy may be dissipated through heat and vibration will be given.

20. If the head of a large pile be struck with a small hand-hammer, the whole of the energy stored up in the hammer will be converted into heat and vibration; for, on striking the head of the pile in rapid succession, the point of impact will become hot, and each blow will make a noise that is produced by the vibration of the pile, which is not advanced the least amount, and therefore no useful work has been done upon it. The effect of a clapper of a bell furnishes an excellent illustration of how energy is converted into vibration or sound.

If a blacksmith pounds a small piece of iron upon the anvil with blows of considerable force and rapidity, the iron will become visibly red, showing that, notwithstanding the iron is flattened out, most of the energy given up by the hammer is converted into heat. The fact that a man receives no injury when he places a large stone upon his

breast and allows another man to strike and break it, as is frequently done by acrobats, shows that the energy of the hammer is almost entirely spent in heat and vibration. These illustrations clearly show the folly of using a small hammer and a large drill to bore a hole in rock.

21. In drilling, the hardness and tenacity of the rock determine largely the weight of drill to use. If too light a drill is being used in a hard rock, it will rebound and a ring will be produced at every blow similar to that produced by striking the face of an anvil with a hammer, showing that more or less energy is being wasted in vibration. An experienced driller soon determines by the sound and feel of the drill whether or not it is suited for the work, and naturally complies with the law that the weight of the drill should be proportional to the hardness of the rock.

THE EFFECT OF VELOCITY AND WEIGHT IN BORING.

22. The amount of work which a drill is capable of doing at the moment of impact depends upon the amount of energy it has stored up at that instant, and this in turn depends upon the velocity, for the energy varies as the square of the velocity. It is therefore immaterial how far the drill moves so long as it acquires the desired velocity, but the less the distance through which the drill moves in order to have a certain velocity, the greater the force must be. Hence, with an available constant force the only way to obtain an increase of kinetic energy in the drill is to increase the length of stroke, which enables the constant force to give the drill increased velocity before impact. The energy also varies as the length of the stroke when the drill is actuated by the same or a constant force, and as the weight when the velocity is constant at the moment of impact. To illustrate, a drill having a velocity of 20 feet per second at impact has four times the energy it has when its velocity is but 10 feet per second at impact; or a drill

having a 12-inch stroke has twice the energy at impact that it would have if it had but a 6-inch stroke; or a drill weighing 20 pounds has twice the energy at impact that it would have if it weighed but 10 pounds, other things being the same.

FIG. 13.

23. In drilling a hole with a long or heavy jumper, two men can do about four times as much effective work as one man using the same drill. This is due to the fact that one man expends a great deal of his energy lifting the drill, and therefore can not exert much force to the drill on its downward stroke. On the other hand, two men lose less energy between them in lifting the drill, and consequently can exert more than double the force on the downward stroke. Further, two men can lift the drill higher in boring downward holes, and therefore have a longer distance through which to accelerate it. This increases the energy at impact proportionally to the increase of length of stroke, as previously stated.

24. The weight of the drill should be such that the drill will not rebound on account of the elasticity of the rock, or have its cutting force materially affected by the debris at the bottom of the hole. Where the hole reaches such a depth that the drill is as heavy as it is possible to advantageously use it, the shank may be made lighter. The jumper is sometimes enlarged near the middle and provided with a bit on each end, as shown in Fig. 13. This arrangement gives weight where the size and depth of the hole would not permit as much weight in the drills as could otherwise be effectively used. The shorter portion *a b* is used first, and when the hole reaches such a depth that the bulb prevents drilling farther, the drill is reversed and the portion *c d* used to finish the hole. In drilling a hole in rock, the cutting edge

of the bit becomes blunt and somewhat shorter, thereby forming a slightly tapered hole, and necessitating that the succeeding bit have a cutting edge from $\frac{1}{16}$ to $\frac{1}{8}$ of an inch shorter than the preceding one.

25. Where the rock is not too hard, jumper drills are often preferred for drilling downward holes; but they are ineffective in drilling vertically upwards, for their weights act against rather than with the force exerted by the driller in delivering the blow. For drilling in hard rock and vertically upwards, the drill and hammer is more efficient than the jumper or churn drill. Percussive drills worked with steam or compressed air are really jumper drills; they do not depend so much upon the weight of the drill for their cutting effect as the hand drill, but rather upon the force which actuates the drill. This force is varied to suit the hardness of the rock in which the hole is being bored.

CLASSES AND USE OF HAMMERS.

26. The two classes of hammers used for drilling are single-hand hammers and sledges. The former are used when drilling a short small hole, in which the driller turns the drill with one hand and strikes with the hand-hammer held in the other, and the latter are used for drilling comparatively large and deep holes, in which the driller turns the drill with both hands while a helper strikes it with a sledge weighing from 5 to 12 pounds and having a handle from 22 to 36 inches long. By the use of the sledge more energy can be imparted to the drill than can be given to it by lifting and dropping it, as in the case of the jumper drill, no matter how heavy the jumper may be.

27. In drilling holes for blasting purposes, a **scraper** is indispensable; it is a slender rod of iron with a flat scoop on one or both ends, which is turned at right angles to the rod.

TEMPERING DRILLS.

28. Tempering a drill is the process of giving it a certain degree of hardness and toughness by first heating it and then cooling it in water or other suitable liquid. In order to get the proper or desired temper in a drill, it is necessary to cool it off when it has a certain temperature, which is very accurately known by the color peculiar to that degree of heat and the grade of steel in the drill. It is therefore essential that the succession of colors produced in steel while changing its temperature be known, as well as the characteristics of the steel.

Annealing is the process of softening iron or steel by means of slowly cooling it after it has been heated. If a piece of steel is heated to redness and covered with dry ashes so as to prevent the rapid radiation of heat, it will be quite soft when cool, while if it is plunged into water it will be hard and brittle.

Not only is it important that any one who tempers drills should know the temperatures indicated by the different colors, but he also should bear in mind that the same color in drills made of different qualities of steel indicates different temperatures. For example, with a fine quality of cast steel a temperature of 490° F., corresponding to a brown-yellow color, would give a bit when cooled off at that temperature a cutting edge suitable for drilling in rock of average hardness, but with a comparatively mild steel, having .5 or .6 per cent. of carbon, a temperature of 520° F., which corresponds to a purple color, would be required to obtain the same hardness and tenacity.

29. The following experiment will enable the student to learn and familiarize himself with the succession of colors: Take an old table-knife and lay it on a very hot lid of a stove or other hot iron. Presently the blade will show a straw color, which will run to the handle. The straw color will be succeeded by yellow, brown-yellow, brown-purple, purple, and blue. These colors follow each other so quickly that close attention must be paid to observe the transition.

When this has been done, the student should learn the degree of hardness that corresponds to the different colors.

To do this, place the blade flat upon the hot lid or other piece of hot iron so that the whole of it will be of the same temperature and color at the same instant; provide a vessel of water, and when the blade becomes straw color quickly plunge it into the water, and finally test its hardness with a file or good pocket-knife. When soft the file easily takes hold, and with the pocket-knife a small shaving can be cut from an edge. Repeat the operation for the different colors, and when the work is completed the student will have a good knowledge of the degree of hardness that corresponds to the different colors of the particular quality of steel in the blade. In the same way a blacksmith or tool dresser should learn the degree of hardness that corresponds to the various colors of each grade of steel which he has to work.

30. In tempering a drill, the following points should be observed:

1. When the bit is dipped in water, it should be moved up and down, or the molecular tension above and below the water-line will be so different that the bit will be liable to break in the same way as the bottom of a glass vessel is cracked by pouring hot water into the vessel.

2. The bit of a drill should not be placed in the incandescent cinders of a fire to be heated, for the cutting edge will be decarbonized and rendered worthless.

3. The bit should be heated a few inches from the cutting edge to prevent decarbonization, and it should not be kept in the fire longer than necessary to heat it to a cherry-red heat.

4. Immediately after removing the bit from the fire, it should be dipped in water for a moment to partially cool it and then rubbed on a stone to remove the outside scale, in order that the colors can be easily distinguished.

5. The colors should advance parallel to the cutting edge, and if in any case they are observed to do otherwise,

that portion of the bit to which they are advancing most rapidly should be dipped in water. Frequently it is necessary to dip the bit in water several times to obtain the proper parallelism before the final cooling. If the bit were cooled when the colors were not parallel to its cutting edge but crossed it, the cutting edge would likely be too soft in one place and too brittle in another.

6. The tool dresser should thoroughly understand how iron can be converted into steel by carbonization and steel into iron by the oxidation of a portion of its carbon. For example, if a piece of white-hot iron is buried in powdered charcoal and the air kept away from it, the skin of the iron becomes carbonized and converted into steel, and if, on the other hand, a bar of red-hot steel is buried in oxide of iron, the skin of the steel becomes decarbonized or converted into malleable iron. In the same way, if the cutting edge of a bit is made red hot in a forge fire and kept at that heat for some time, it will be decarbonized or converted into malleable iron. This is why care should be exercised in heating the drill.

7. The bits of drills give better results when tempered in thick oil or coal-tar than when tempered in water, the reason being that the water rapidly chills the thin parts and the skin of the thick parts, which produces uneven hardness in the bit, while the oil or tar cools the bit more gradually and evenly and renders it more tough. If it is found that a certain bit should be dipped in water when it has a blue color, it should be dipped in oil when it has a purple color. In other words, in order to produce the same degree of hardness while tempering with oil that has been obtained by tempering with water, the bit should be dipped in the oil when it has the color which precedes the one which it has when dipped in water to obtain the best temper. This is due to the fact that the oil cools the bit more slowly. In all cases the oil makes the bit tougher and more reliable than it can be made by the use of water.

8. The best temper for bits made of good steel is

produced by dipping the bit in water when it is blue, or in oil when it is a very light blue.

9. The colors are deep and distinct for good steel and scarcely perceptible for poor steel, consequently a practised eye can determine very accurately the quality of the steel by the depth of the running colors.

31. Fig. 14 shows the order of the colors when the bit is heated to a dull redness at *H*. The arrows indicate the direction in which the colors flow. If a drill is sufficiently hard when tempered at a purple color in water, but lacks in toughness, it can be tempered in oil and given the same

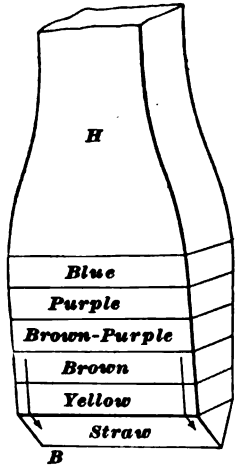

FIG. 14.

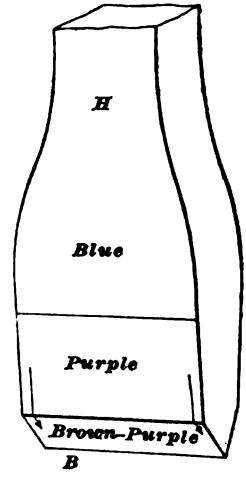

FIG. 15.

degree of hardness and increased toughness by dipping it in the oil while the brown-purple is in the cutting edge, as shown in Fig. 15. The reason it should be dipped in the oil before the purple color arrives at the cutting edge is because the oil takes more time to cool it than is required by water, and therefore by the time it is cooled the purple color will have reached the cutting edge.

POWER PERCUSSIVE DRILLS.

32. Compressed-air and steam drills have made it possible to work with profit many mineral lodes and veins and coal seams which would be unprofitable were they developed by means of hand drilling. They have also made it possible to accomplish great engineering projects, as the driving of large and long tunnels, the sinking of deep shafts, and the building of comparatively straight railroads in mountainous regions where deep rock cuts are required.

33. Fig. 16 shows the general construction of a steam or compressed-air rock-drill. The machine is supported on a tripod, the legs of which are weighted by the heavy castings *W*, *W*, and attached to the body of the machine with universal joints, as shown at *S*, *S*. The steam or air cylinder *C* is raised or lowered on the slides *G*, *G* by the screw *P*, which is turned by the hand-crank *A*. The drill is attached directly to the chuck on the end of the piston, which has a stroke of from 4½ to 8 inches. The steam or air is conducted to the cylinder through a rubber tube, and exhausts through the curved pipe. It is turned off or on by a valve, and when turned off any steam or air that may be confined in the cylinder can be freed by another valve attached to the same T, but above the connection with the cylinder.

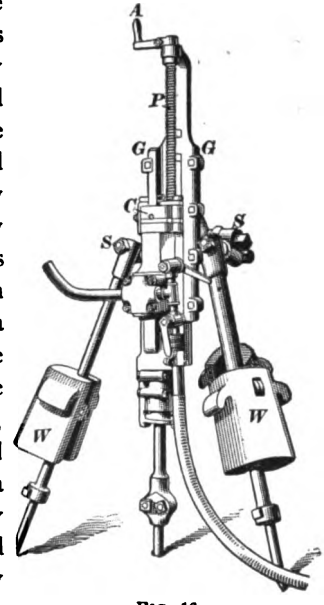

FIG. 16.

34. The detail mechanism is shown in Fig. 17, which is a longitudinal section of a compressed-air or steam rock-drill. The piston-head is over one-half the length of the inside of the cylinder *A*. Each end is provided with a steel

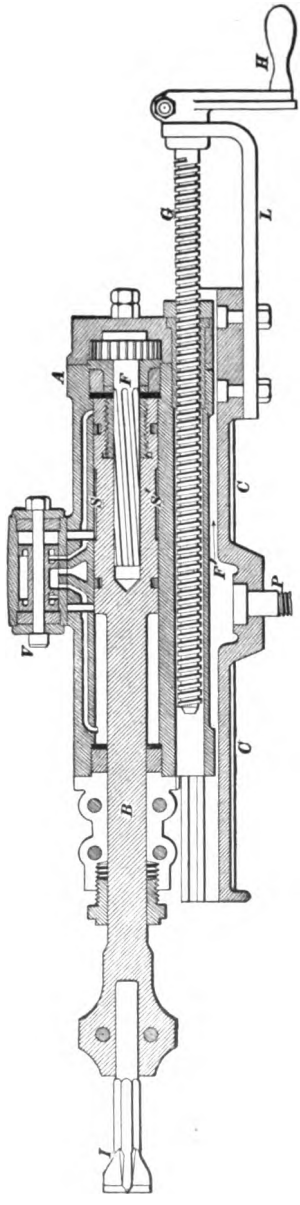

FIG. 17.

ring, which makes it steam or air tight, and in the middle there is a reduction, leaving the annular space $S\,S'$. The piston B is automatically turned during the upward stroke by the rifle F, which is prevented from turning the opposite way by a pawl and ratchet-wheel at the top of the rifle F. Thus, during the downward stroke of the piston B, the rifle is turned, but during its upward stroke the rifle is prevented from turning by the ratchet-wheel and pawl, and consequently the piston and drill must turn. In this way, the bit is automatically turned for each blow.

35. There are several excellent power percussive drills on the market, which are designed on the same general principles, the most essential difference being in the construction of the steam or air valves.

36. The number of strokes made per minute by percussive drills depends on the power applied and the size of the drills. The smaller drills make more strokes per minute but strike lighter blows than the larger ones. With a pressure of 60 pounds per square inch, percussive drills range in speed

from about 500 strokes per minute for small machines to 250 strokes per minute for large ones.

This difference in the speed of the machines is due to the fact that in the small machines a bit will stand a larger number of blows per minute, because the weight of the blow is less than in the large machines. In a small machine, using a comparatively small drill, a velocity of 500 strokes per minute will not injure a bit any more than a much less velocity in a larger machine. For this reason the manufacturers of power percussive drills have adjusted the speeds of the various sizes, so that each will have a speed which will do most effective work. These speeds have been adopted in accordance with the general principle that for a given amount of energy a power drill can cut more hard rock, with less damage to the bit, when it strikes a moderately hard blow at frequent intervals than when it strikes a very hard blow at less frequent intervals.

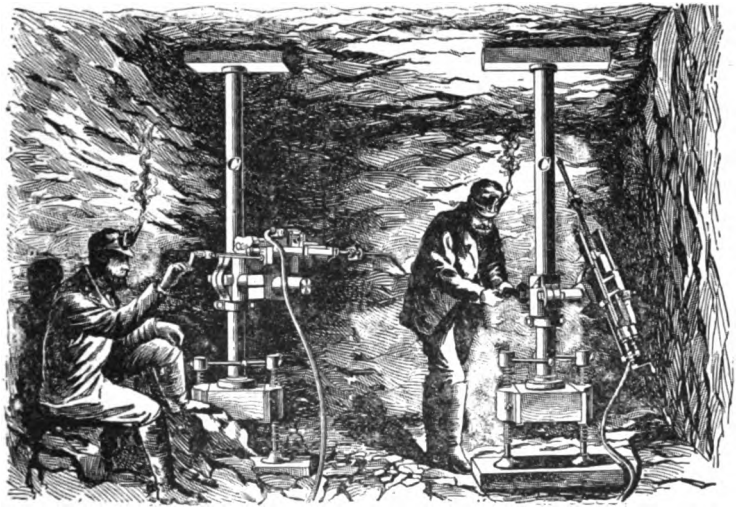

FIG. 18.

37. Fig. 18 shows two drills mounted on double-screw drilling columns *C*, *C*. The man on the left has his drill in

position for drilling a horizontal hole in the rock, and the man on the right is tightening up the socket *A* on the column at a position sufficiently low to drill a hole near the top of the tunnel and pitching upwards. Each of these columns is fastened from the bottom, as the tunnel is too

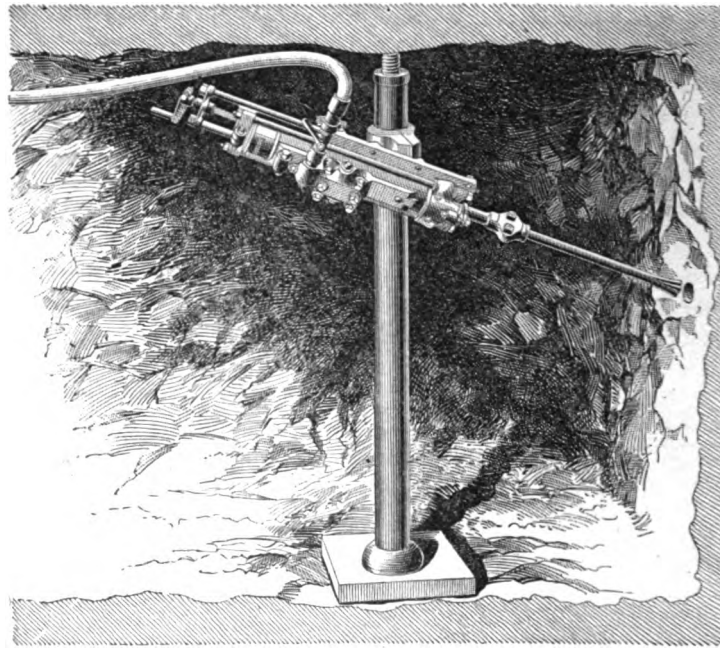

FIG. 19.

high to operate the screw conveniently from the top. Fig. 19 shows a single-screw drilling column fastened or tightened from the top, and a drill fastened to it in position to drill a hole in the face inclining downwards, and Fig. 20 shows a drilling column in a horizontal position and two in vertical positions. It also shows how percussive-power drills are set up and connected to the main steam or air pipe for doing work under different conditions.

38. It is possible to operate a percussive-power drill in almost any position, and, in addition to this advantage, the

amount of work they can do is many times greater per day than that which can be done by hand drilling, provided there is sufficient space to operate the machines.

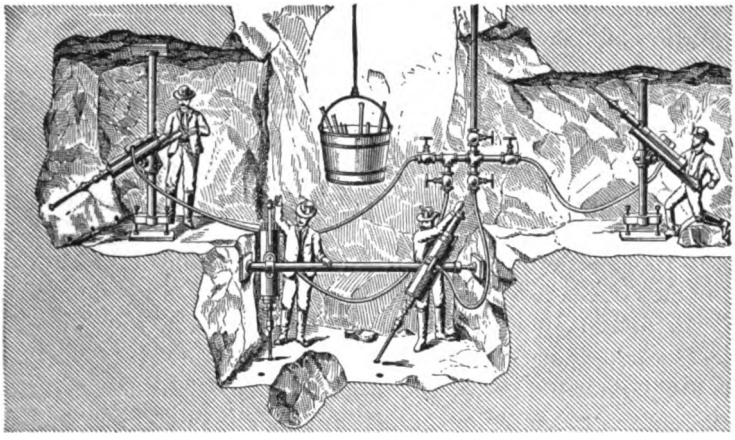

FIG. 20

39. André sums up the requirements of a good percussive machine rock-drill as follows:

1. It should be simple in construction and strong in every part.

2. It should consist of few parts, and especially of few moving parts.

3. It should be as light as possible, consistent with strength.

4. It should occupy as little space as possible.

5. The striking part should be of relatively great weight, and should strike the rock directly.

6. No parts except the piston and bit should be subject to violent shocks.

7. The piston should have a variable stroke.

8. The sudden removal of the resistance should not cause any injury to any part.

9. The drill should be rotated automatically.

10. The feed, if automatic, should be regulated by the advance of the piston as the cutting advances.

40. The weight of a steam or compressed-air percussive rock-drill, less the weight of the piston and drill, should be greater than the total steam or air pressure upon the piston-head, for it is this pressure that reacts upon the machine and tends to lift it when the piston is being forced downwards. It is to overcome this reactionary force that the dead weights are placed upon the legs of the tripod; when the machine is attached to a drilling column, dead weights, of course, are not required.

If the size of the piston-head of a machine rock-drill is 3 inches in diameter, and the steam or air pressure be taken at 70 pounds per square inch, the constant force which accelerates the piston and bit will equal $3^2 \times .7854 \times 70 = 494.8$ pounds. Hence, the weight which tends to keep the machine in place while the piston is being forced out should be at least 500 pounds, otherwise the reactionary force would remove the machine in the same way that a cannon recoils when a large ball is shot from it.

41. The following are the dimensions and features of power percussive rock-drills of the standard type:

1. The diameter of the piston varies from 2 to 5 inches.

2. The length of stroke varies from $4\frac{1}{2}$ to 8 inches.

3. The extreme length of the drill from the end of the crank to the end of the piston varies from 36 to 60 inches.

4. The length of the feed or the distance the piston and cylinder can be moved to follow up the advance of the hole varies from 12 to 30 inches.

5. The weight of the machine without the tripod varies from about 100 to 700 pounds. The weight of the tripod without the dead weights varies from 40 to 270 pounds. The total weight of the machine varies from 250 to 1,600 pounds.

6. The force of the blow varies from 250 to 1,500 pounds.

7. The mean steam or air pressure used is 60 pounds per square inch.

8. The average number of strokes per minute is 500 for the small drills and 300 for the large ones.

9. The large machines drill to a depth of approximately 30 inches, and the small ones to a depth of approximately 12 inches without changing bits.

10. The average work done in drilling downward holes in granite is about 7 feet per hour.

11. The depths to which the small and large machines drill holes are about 4 and 30 feet, respectively.

12. The diameters of the holes drilled by small and large machines are from $\frac{5}{8}$ inch to $1\frac{1}{4}$ inches and from 3 to 6 inches, respectively.

13. The diameter of the steel bars used for making drills for small machines varies from $\frac{3}{4}$ to $\frac{7}{8}$ inch, and for large ones it varies from $1\frac{5}{8}$ to $2\frac{1}{4}$ inches.

14. Four drills make a set for shallow holes and ten drills for long ones.

15. It requires about 5 horsepower to work the small drills and about 15 horsepower to work the large ones.

16. Steam is usually the most economical for drilling in outside work, but for tunneling and sinking shafts, or mining work in general, compressed air is the best, for it helps to ventilate and makes the surrounding atmosphere more comfortable for the workmen. Further, it is more economical to transmit energy considerable distances through air than through steam.

42. The electric percussive drill resembles in its general appearance the steam or compressed-air drill, and it can be mounted on a tripod, column, or quarry bar, and can be used in any place not generating explosive gases in dangerous quantities. The operation of electric percussive drills depends upon the principle that if an electric current be passed through a coil of wire in the form of a helix, such forces will be set up that if a soft iron core be placed within

the helix it will be drawn to a central position if free to move. Therefore, it is clear that if an iron core be passed through two adjacent coils and the current run through one of them, the core will be drawn in one direction, and if run through the other the core will be drawn in the opposite direction.

43. A longitudinal section of one of these drills is shown in Fig. 21. The reciprocating motion is given to the plunger *a* by alternate magnetic forces produced by an electric current passing through the coils *b* and *c* alternately. The change of current from one coil to the other is effected at the dynamo or generator, and consequently nothing but common connections are needed on the drill. The flexible cable which conveys the current to the drill consists of three wires, one of which is common to the return portion of each of the two circuits leading from the coils. The connections between the wires of the cable and the coils are made by means of the brass plugs *d*.

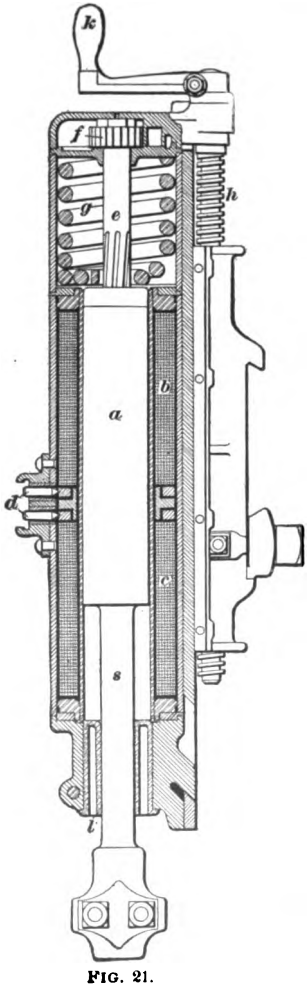

FIG. 21.

The plunger is rotated by the rifle rod *e*, which enters a rifled nut at the end of the plunger, and which is prevented from turning during the backward stroke by the ratchet-wheel *f*.

The large spring *g* not only absorbs the energy of the plunger during the backward stroke, but it imparts the energy thus absorbed to the plunger during its forward stroke, thus enabling the drill to

strike a heavy blow. The feed-screw *h* is turned by the crank *k*, but when desired these drills are provided with automatic feeds similar to those used on other drills.

In case the bit meets with no resistance and the stroke becomes excessively long, the plunger is prevented from striking the brass bushing *l* by a magnetic force set up in the rear coil. The plunger runs quite freely, having a bearing at one end within the coils and another in the front head of the drill. It is not necessary that the brass bushing fit the shank *s* neatly, as an air or a steam tight joint is not required.

The principal use of the bushing is to prevent the drill from wabbling when starting a hole, and when it fails to do this, new bushing is readily put in.

The coils are made of bare copper wire of square section wound upon a steel tube provided with steel heads. The wire is insulated with pure mica, and from its square shape forms a solid cylinder, which is not affected by the jars and shocks to which the machine is subject while working. The coils are encased in iron jackets, which make them impervious to dirt or moisture.

THE HAND-POWER ROCK-DRILL.

44. Hand-power rock-drills resemble somewhat, in their construction, and very much in their mode of action, the steam and compressed-air percussive rock-drills. They are used principally in places where steam or air is not available, as in many mines and tunnels, and are more economical than churn-drills or hammers and jumpers, because the energy which operates the drill is economically stored, and very little of it is lost in vibration.

45. Fig. 22 shows the Jackson hand-power percussive drill, in which *S* is the chuck on the end of the piston and in which the bit is placed and rigidly fastened. *C* is the hand-crank by which the gear-wheel *G* is directly turned. This wheel gears with a pinion on the axle of the

fly-wheels *F*, *F*. The feed is automatic or regulated by the crank *H*.

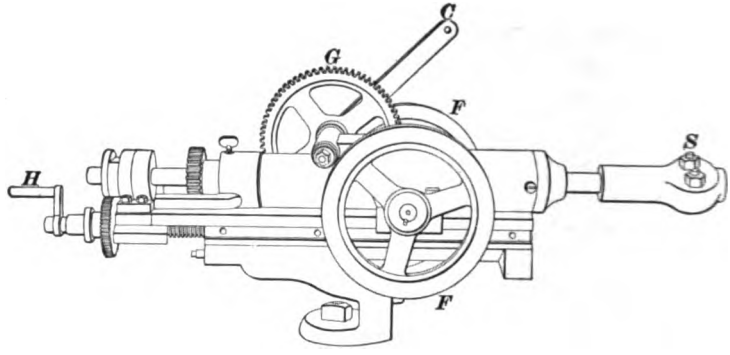

FIG. 22.

46. Fig. 23 shows a longitudinal section of a hand-power drill. The large and small gear-wheels are shown in dotted lines at *m* and *n*, respectively, and the fly-wheels in a full line at *o*. It will be seen that the cams *f* are placed upon the same shaft as the fly-wheels and the small gear-wheel *n*, and that they are turned very rapidly when the crank *l* is turned by the operator, the ratio being $3\frac{1}{4}$ to 1. The cams are so shaped that they press against the shoulder *k* so as to compress the spring a little and store up energy in the fly-wheels during a considerable portion of their revolution. During the remainder of their revolution they rapidly compress the spring to its limit by utilizing the stored energy in the fly-wheels, and suddenly release the shoulder *k* and allow the spring *g* to shove the piston *a* forwards with great force. In this way the drill, which is fastened in the chuck *b*, is made to strike the rock with hard and frequent blows. The drill is turned automatically by the rifle *h*, as in steam or compressed-air percussive drills, and in case all resistance is moved away from it, the shoulder *e* acts against the spring *c*, which gradually absorbs the energy of the piston and prevents any serious shocks to the machine.

The stroke is variable, which is necessary to prevent fitchering while starting a hole or boring through the parting of

two seams, and the operating mechanism is advanced as the hole increases in depth by means of the feed-screw *d*, which is turned by the hand-crank handle *t*. The feed is also automatic; the small gear-wheel near the top of the rifle *h* turns the gear-wheel below the handle *t*, which in turn rotates the feed-screw *d*. The rotating and check wheels are placed immediately below the small gear-wheel at the top of the rifle *h*, and the drill is forced to turn one way, as in steam or compressed-air drills. The support or center-clamp stem is bolted to the frame or tripod that is used to hold the machine in place. These drills are very efficient, and strike a blow varying from 50 to 500 pounds, depending upon the position of the tension screw, which is held in place at the top of the spring *g* by a small set-screw.

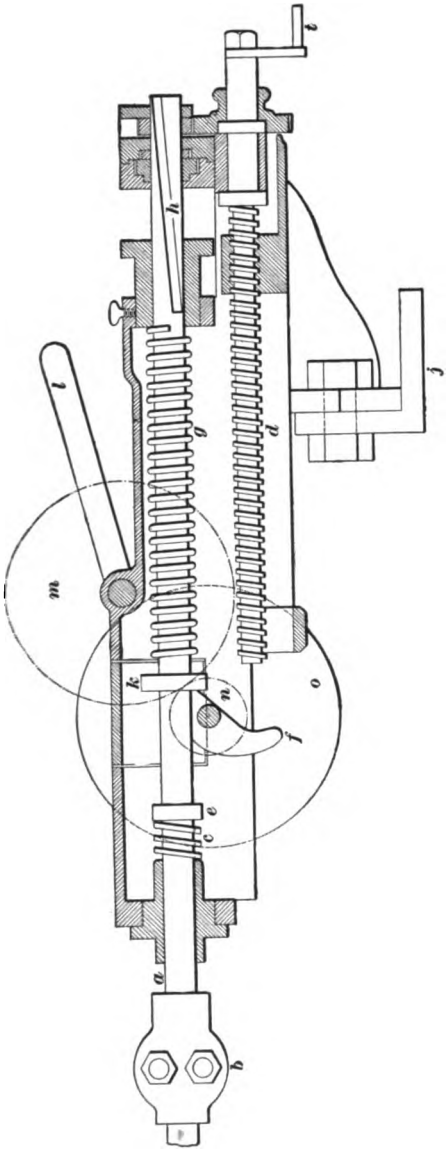

FIG. 23.

47. Fig. 24 shows a Jones hand-power drill mounted upon a drilling column *c*, for drilling a breast or horizontal hole. The drill can be given any inclination by means of the clutch which is operated by the lever *l*, and when fixed in this respect it is further steadied by the stay-rod *r*, whose sharp end is driven into the face of the rock, and the rod

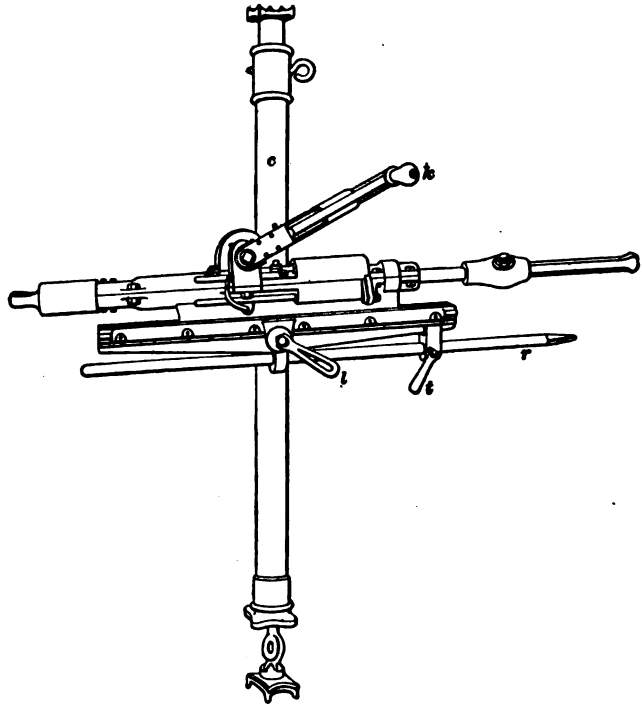

FIG. 24.

finally clamped by the lever *t*. The detail construction is shown in the sectional and side views in Fig. 25.

The guide shell *a* contains the feed-rack, which is engaged by the feed pawls *b*. The rubber friction shoe is controlled by the friction cam handle *c*. In operating the machine, the mutilated gear-wheel *d*, which is turned directly by the crank *k*, engages with the piston rack *e* and compresses the

spring *f* to its limit, when all is released and the piston and drill are driven forwards with great force. The feed is

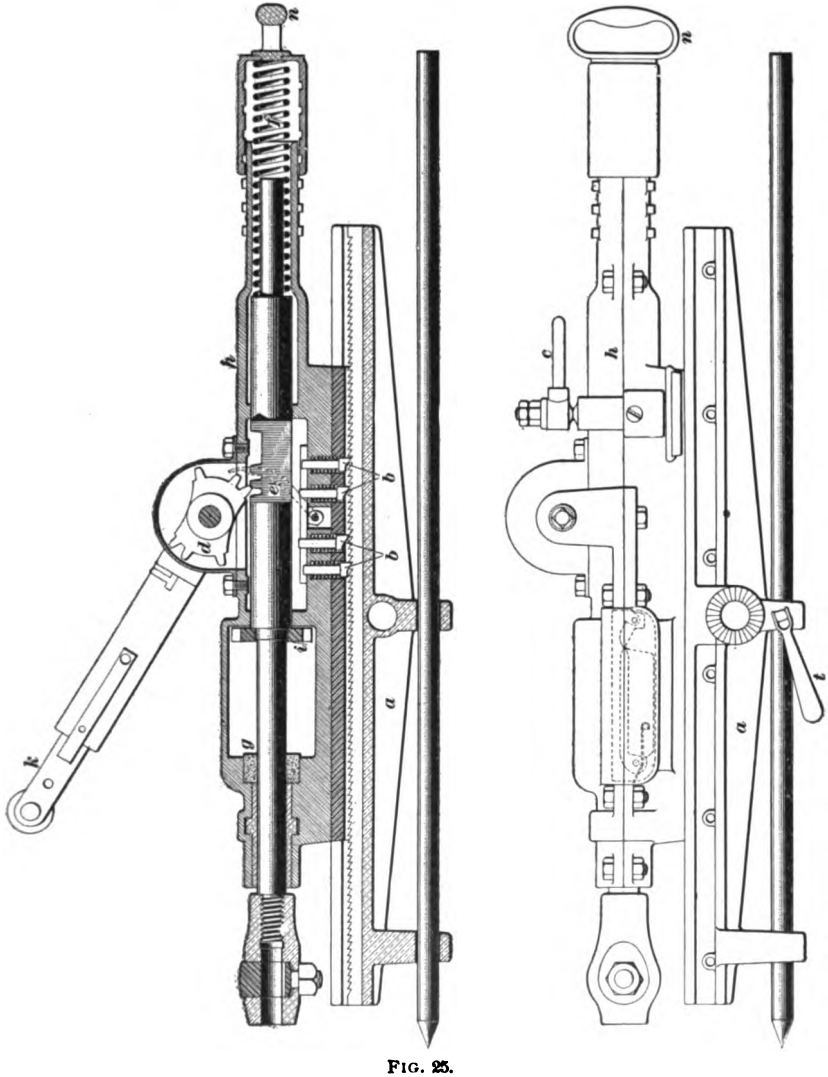

FIG. 25.

automatic, being produced by the shoulder on the piston striking against the buffer *g* whenever the hole is advanced

far enough. The amount the shell *h* is advanced will depend upon the force with which the piston strikes the buffer *g* and the pressure upon the rubber friction shoe. This advance is taken up by the feed pawls *b*, which are so arranged that the amount of feed or advance of the shell *h* may vary from $\frac{1}{100}$ inch to 3 inches per revolution.

The bit is rotated automatically by means of the wheel *i*, which rotates the piston on the back stroke. The piston is also prevented from turning either way on the outward stroke by a pawl, whereby fitchering is prevented, and therefore single-edged bits, which are more easily sharpened than double-edged bits, can be used.

An advantage of this drill is that it can be pulled back by the handle *n* at any time and the hole cleaned without turning any screw or removing the drilling column. In using hand-power drills, it is best not to drill holes over $1\frac{1}{4}$ inches in diameter.

48. Although the hand-power drill is more efficient than the hammer and jumper, it is less efficient than the steam, compressed-air, or electric drill, because there is more friction due to the moving parts and less motive power.

In percussive boring in rock, water is used whenever possible to assist in cleaning the holes of debris without interrupting the drilling, and at the same time it prevents the excessive heating of the cutting edge of the bit and its consequent loss of temper.

METHODS AND APPLIANCES FOR DEEP BORING.

49. There are various methods and appliances for deep boring by percussive action, some of which are very primitive and used only as makeshifts in rural districts where modern boring appliances are not available.

50. The most efficient makeshift for a regular deep-hole rig is the *spring-pole system*, which is sometimes used in drilling comparatively shallow holes for water-supply,

prospecting, etc., and is shown in Fig. 26. A slender tree with considerable spring in it is cut down for the spring-pole *P*. Its large end is embedded in the ground by digging a ditch in the direction which the pole must have when in place, and another ditch at right angles to the first one, in which the log *l* is placed over the large end of the spring-pole. At a point about midway between the ends of the spring-pole a support *S* is placed, giving the pole an inclination of about 30 degrees. The large end of the pole and also the log *l* are then weighted down with stone, to prevent any

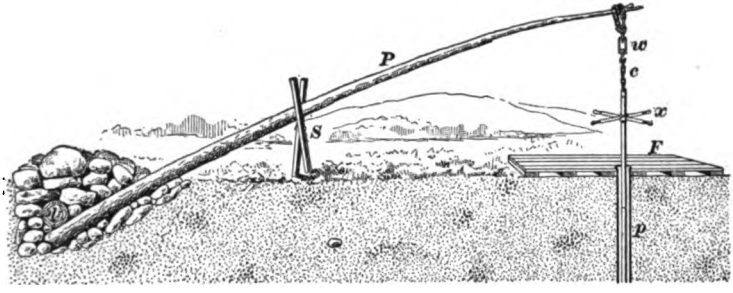

FIG. 26.

movement while the operation of drilling is going on. The bore rods are attached to the small end of the pole by a chain *c* and swivel *w* in such a manner that the drill-rods are held in equilibrium by the spring of the pole. The rods are operated by two or four men, who take hold of the handles on the cross *x* and alternately lift and force the drill-rods down, and at the same time turn them, either by walking around the top of the hole on the platform *F* or by passing the handles of the cross *x* from one to the other after each blow.

A number of short drill-rods are used near the top of the hole, so that the entire length of the rods can be lengthened whenever the cross *x* becomes too low for the men to effectively operate it. These short rods are finally replaced by a long one and again used as before.

Before starting the hole, it is necessary that a pipe *p* be driven into the ground to guide the rods, and in the

event that the surface is rocky, a guide hole is bored with the hammer and drill or jumper. In either case, the pipe or bore hole should be perfectly vertical, so that the hole proper will continue straight and vertical to the end. Water is poured into the hole when necessary, and the debris is taken out in the shape of slime or mud by means of a sand-pump, explained later.

With this method, the men have no weight to lift. Their energy is exerted in forcing the rods downwards, which, aided by the weight of the rods, causes the bit to strike the rock with great force. By means of the spring-pole method, holes can readily be drilled to a depth of 150 feet.

51. Sometimes when it is not essential to have a hole bored in any exact location, it may be started under a tree having a suitable branch which can be used to perform the same function as the spring-pole previously explained. Or, the drill-rods may be suspended from the middle of the branch and ropes tied to its end, which are pulled by men until the bit has reached the bottom of the hole and considerable slack is produced in the chain supporting the rods. Then, by suddenly releasing the ropes, the bit is made to strike the bottom of the hole a number of times by the vibration of the branch. The men then repeat the operation, and in this manner continue the hole to the required depth.

52. Early in the history of boring with rods, it was found that after a depth of about 300 feet was reached, the rods would break on account of the excessive vibration, and to overcome this difficulty, Kind and Chaudron invented the free-falling cutter. In this method a portion of the rods near the bit does the cutting, while the long line of rods above this portion is simply used to raise the lower part a short distance and automatically let it drop to the bottom of the hole. A piston about the size of the hole is attached to the bottom of the upper length of rods, and it is always kept submerged in water during the process of boring.

FIG. 27.

Whenever the rods begin to descend, the resistance of the water upon this piston releases the lower portion of the rods, which falls by gravity and imparts to the bit its cutting force when it reaches the bottom of the hole. The top portion of the rods is slowly lowered and automatically connects with the lower portion, whereby it is lifted and the operation of falling repeated. By this method, holes are drilled to a depth of 1,200 feet more readily than they can be drilled to a depth of 300 feet by the solid-rod method.

53. In the American system of boring, a rope is used instead of rods to operate the tools at the bottom of the hole. This method is a great improvement over the Kind-Chaudron method, because there is no disconnecting of rods and the tools can be removed from the hole and replaced with great despatch. The cleaning of the debris from the bottom of the hole can also be done with equal rapidity.

FIG. 28.

DEEP PERCUSSIVE BORING APPLIANCES.

54. Fig. 27 shows a string of tools in a hole bored through different strata. It will be noticed that

the order of the tools is the rope, the rope-socket, the sinker-bar, the jars, the auger-stem, and the bit. The hawser-laid cable shown in Fig. 28 consists of three small ropes twisted to form one. This insures a maximum of elasticity and strength.

55. Fig. 29 shows a temper-screw by which the length of the rope is adjusted to suit the advance of the hole. The rope R is held in place by the jaws within the socket S T, which are forced together by the screw which is turned by the lever L. This socket is suspended by links to the swivel H. The rope is wrapped with tow where the jaws take hold, to prevent the threads from cutting. During the operation of drilling, the rope is twisted one way for a while and then reversed, and is advanced by turning the lever N. When the screw in the link A is run out, the threaded jaws at the lower end of the link A are separated by the screw J, and the screw within the link A is raised and the threaded jaws again adjusted by means of the screw J. This obviates the necessity of turning back the long screw, and thus greatly facilitates the work. The temper-screw is attached at E to a link suspended from the walking-beam, which will be explained further on.

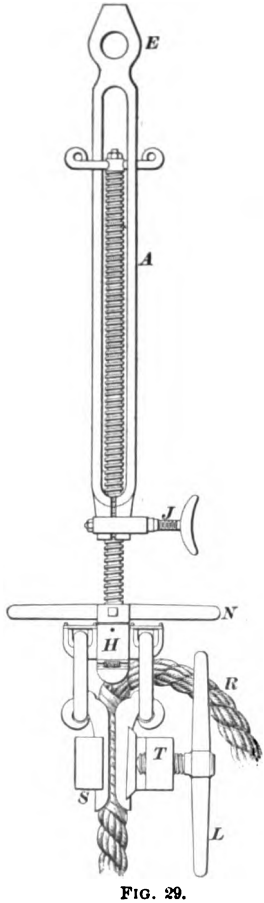

FIG. 29.

56. The rope is connected to the string of tools by the socket shown in Fig. 30. It is first placed through the upper portion U and the jaws S, S, and then tightly

clamped by screwing both portions U and L together with two wrenches, one placed on the square portion of U and the other on the portion L at H. The upper end H of the sinker-bar, shown in Fig. 31, is screwed into the socket at L, Fig. 30, and the lower end F is screwed on the end G of the jars, Fig. 32.

The upper end K of the auger-stem, Fig. 33, is screwed into the lower end W of the jars, and finally the bit is screwed into the end T of the auger-stem. The sinker-bar, which is about 18 feet long, keeps the rope taut and the upper part of the jars in line, and the auger-stem, which varies in length from six to forty-five feet, depending

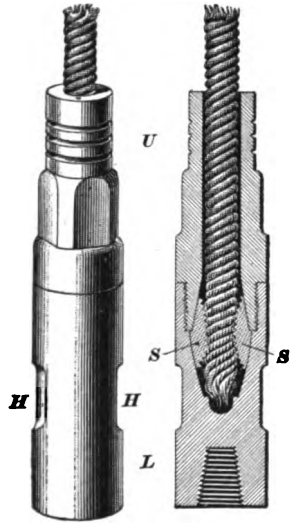

FIG. 30.

FIG. 31.

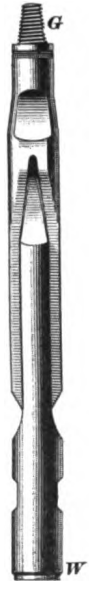

FIG. 32.

FIG. 33.

upon the size of hole and kind of rock, keeps the lower part of the jars in line and guides and imparts the cutting force to the bit.

The jars are about 7½ feet long, and consist of two links, which work within each other like two links of a chain. The object of this loose motion is to provide means by which the sinker-bar, when lifted, can strike a blow which readily disengages the bit and auger-stem in case they are wedged fast on account of the downward blow. In case the driller lets out too much rope, the upper portion of the jars will strike the lower portion during the downward stroke, and of course the bit will be lifted but a short distance during the upward stroke. Such an occurrence is made known to the driller by the jar felt in the rope. Sometimes the upper part of the jars is allowed to strike the lower part to procure a double blow when drilling through a very hard rock.

57. The bits used in deep boring are similar to those previously explained, except that they are provided with a screw on one end by which they can be attached to the auger-stems. Fig. 34 shows two kinds of bits generally used for deep boring. *A* is a three-winged bit, as shown by its plan *C*, and *B* is a ✚ bit, as shown in plan at *D*.

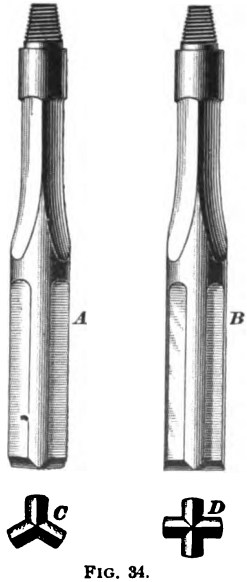

FIG. 34.

An experienced driller can determine with considerable accuracy the nature and thickness of each stratum passed through by the difference in rate of cutting and the feel of the rope. Examinations of the debris removed by the sand-pump are, however, depended upon for positive information.

58. The dimensions and weights of the several parts of an ordinary string of tools are approximately given in the following table:

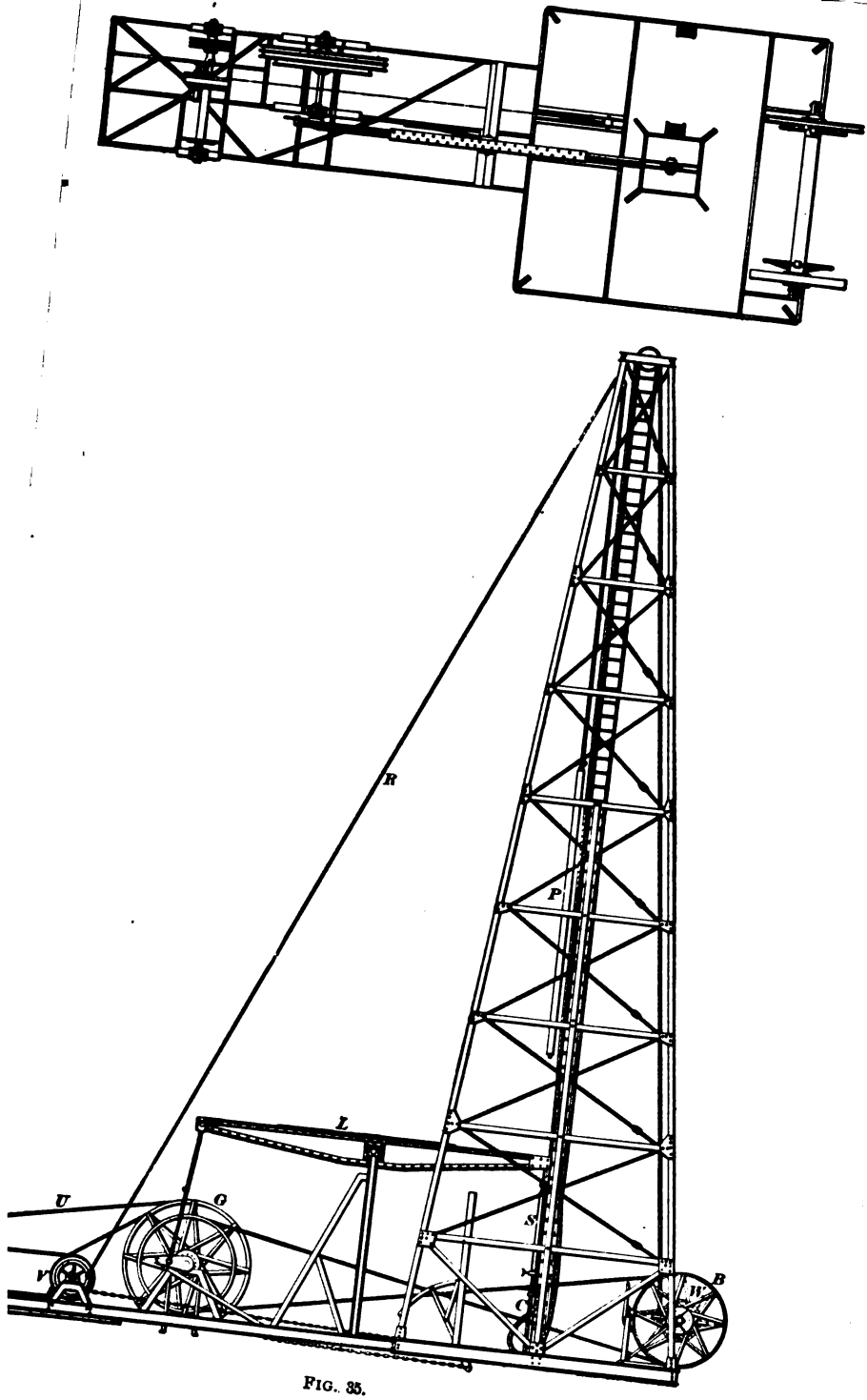

FIG. 35.

Name.	Length.	Diameter.	Weight.
Rope-socket,	3 ft. 6 in.		80 lb.
Sinker-bar,	18 ft.	3½ in.	540 lb.
Jars,	7 ft. 4 in.	5½ in.	320 lb.
Auger-stem,	30 ft.		1,020 lb.
Bit,	3 ft. 3 in.		140 lb.

59. Fig. 35 is a steel derrick, which affords an excellent illustration of the uses of the rope W, the walking-beam L, the bull-wheel B, the band-wheel G, and the sand-reel V. The walking-beam is directly connected to the string of tools by the temper-screw S and the rope C. The bull-wheel B and drill rope W are used for hoisting and lowering the tools. The sand-reel V is used to raise and lower the sand-pump P with the rope R. The band-wheel G is turned by the rope U which passes around the band-wheel on the engine.

60. Derricks are built of wood or structural steel and are about 20 feet square at the base and about 80 feet high, the size depending upon the length of the string of tools. The use of the walking-beam, which is actuated by a crank, is to lift and drop the tools alternately. It has a stroke of about 2 feet and an end velocity of about 6 feet per second, which is sufficient, as it is found that owing to the resistance due to the water and debris in the hole and lateral friction, the tools can not drop any faster by gravity. A velocity of 6 feet per second will cause an auger-stem weighing 1,200 pounds to strike a blow the mean cutting force of which can be calculated as follows: Suppose the cutting to be done through a space of ¼ inch, then the average cutting force =

$$\frac{6^2 \times 1{,}200 \times 4 \times 12}{2 \times 32.16} = 32{,}239 \text{ pounds} = 16.1 \text{ tons.}$$

61. Fig. 36 shows a wooden derrick at which a guiding drive or bore tube is being driven to place. The crank on the band-wheel C is connected by a short rope R to the boring rope at B. As the band-wheel rotates, its crank

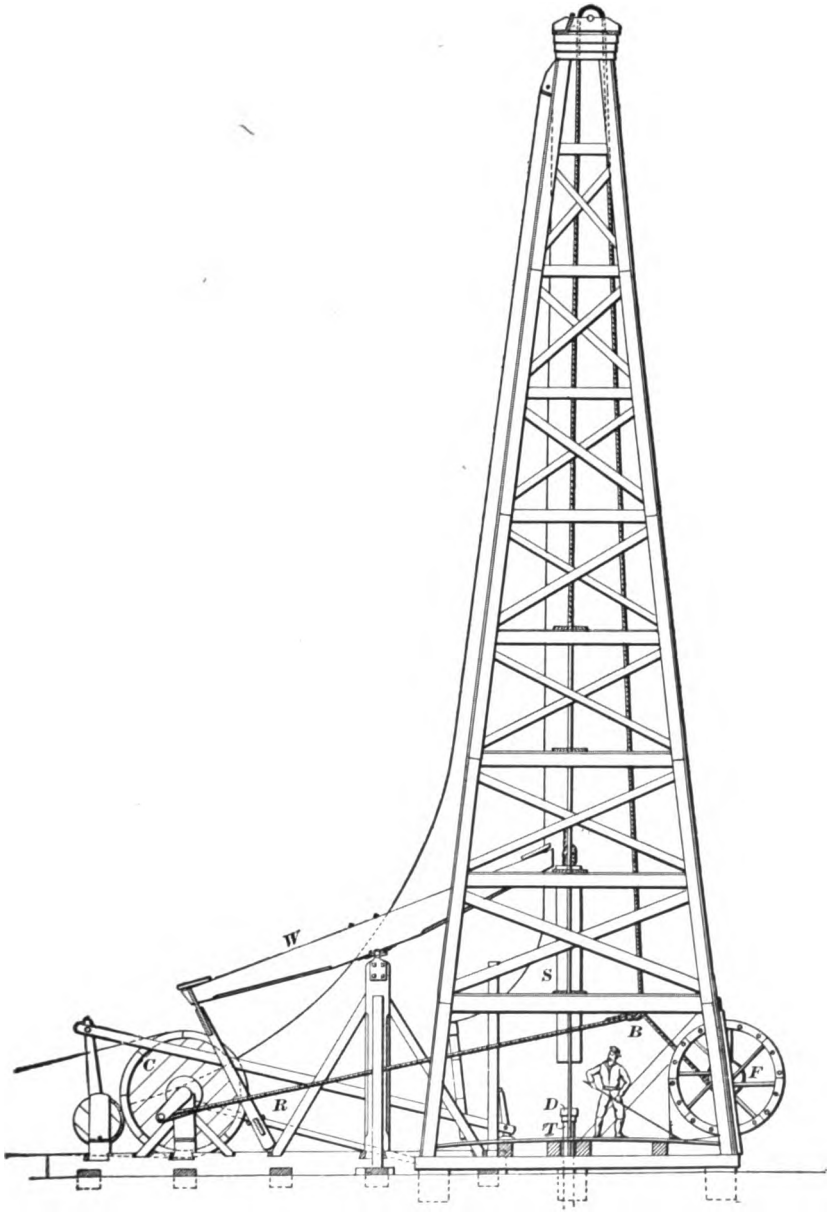

FIG. 36.

imparts a reciprocating motion to the short rope, which deflects the boring rope and lifts and then drops the weight *S* upon the drive head *D*. The tube *T* is thus driven into the bore hole. The man is regulating the operation by means of a band brake on the bull-wheel *F*. It will be seen that for this work the walking-beam *W* is disconnected from the crank on the wheel *C*.

62. Fig. 37 shows a sand-pump used to clean out the holes. A valve is placed near its lower end, and as the

FIG. 37.

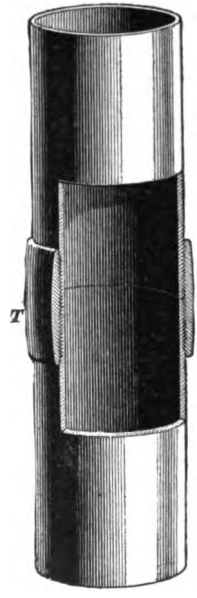

FIG. 38.

pump is worked up and down at the bottom of the hole the debris is forced into it and raised to the surface. The piston within the pump assists in filling the pump with the debris. The hole is generally cleaned out when the tools are taken out to replace a bit.

63. In sinking through soft ground, the hole is lined with a drive or guide tube, which serves the double purpose

of keeping back the ground and keeping the tools in a perfectly vertical position. Fig. 38 shows a portion of two drive tubes fastened together with a thimble *T*. Whether hard or soft, the upper portion of the hole is always encased for oil-wells.

Fig. 39 shows a drive head, which is screwed on the drive tube so that it can be driven into the hole.

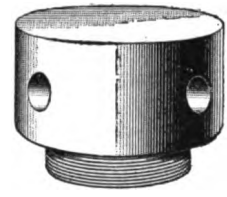

FIG. 39.

64. In measures with but little inclination the tendency of the drill is to cut exactly vertically, but in pitching measures there is a tendency of the bit to leave a vertical line when passing from a comparatively soft stratum into a harder one. This tendency is so strong that even most experienced drillers are sometimes unable to overcome it, though, as a rule, competent drillers detect it quickly, and take steps to prevent it. A hole not vertical throughout its whole length is very troublesome if for any reason it is desired to case it throughout or to pass a haulage rope through it, because the rope will strike the sides and will in a short time be ruined.

65. In casing holes, the general plan is to use a casing whose outside diameter is slightly less than the diameter of the hole, the space between the pipe and hole being carefully filled with Portland cement.

In case the hole meets a fissure in the rock which drains it or admits surface water, seed-bags are used to close such crevice until the casing is put in. They are also used to make a packing at the end of the casing tube previous to putting in the cement. These **seed-bags** are small bags filled with flaxseed, which rapidly swells when wet, and thus fills up the space to be closed.

66. Fishing or grappling tools are so numerous and of such great variety that it would be useless to touch upon them in this Paper. The operation of fishing for tools is indeed a business in itself. Reamers are also of many kinds,

and therefore but one will be given, more to show their use than their construction. Fig. 40 shows a reamer enlarging a hole, the upper portion of which is lined with drive tubes. It will be seen that the lower portion of the reamer neatly fits into the hole and makes the cutting projection cut concentrically to the hole.

FIG. 40.

PORTABLE PERCUSSIVE-BORING MACHINES.

67. Experience in the oil country, particularly in Pennsylvania and Ohio, has proved that boring with the walking-beam is the most practical, consequently no effort has been spared to make an efficient and practical portable machine with a walking-beam. Many portable drilling-machines having a release gear for allowing a long lever, to which the tools are attached, to drop when it reaches its highest point, are built; but for deep holes they have been largely displaced by machines like that shown in Fig. 41. Such machines are drawn from place to place by horses, but sometimes they are provided with traction-gear run by the engine.

When the walking-beam *b* is not in use, the pitman *p* is detached from the wrist-pin on the crank which is at the far end of the shaft on which the pulley *x* is placed, and placed upon the ground as shown. The engine *e* drives the small pulley *d*, which in turn drives the large pulley *x*. The sand-pump *s* is raised

and lowered by the sand-line *l*, which is wound upon a reel actuated by the friction-wheel *w*. The operation of this machine is the same as that of a rig in which a walking-

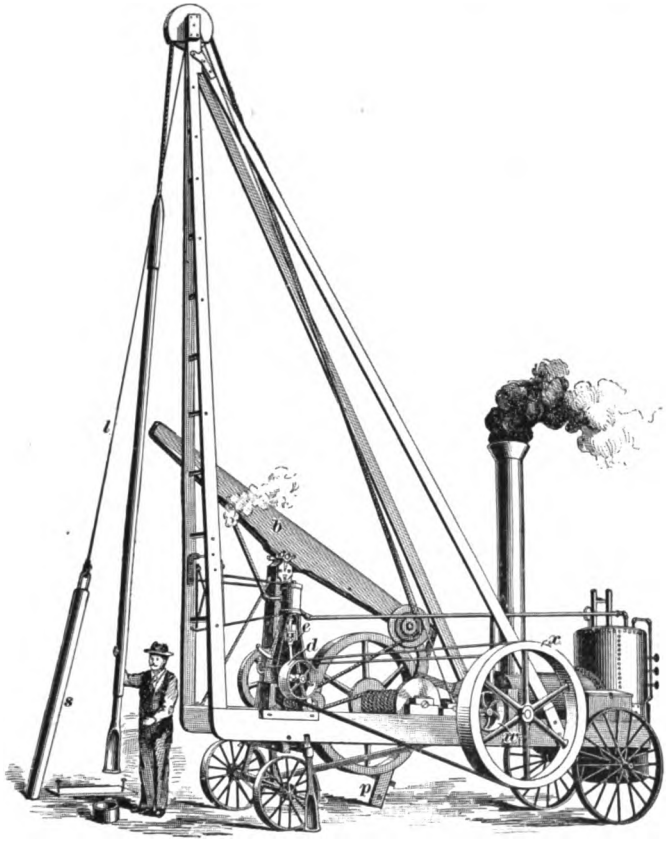

FIG. 41.

beam is used. It is provided with Miller's patent spudding and pipe-driving attachments, shown in Fig. 42, which are used principally for driving bore tubes and starting holes or boring down to the solid rock, or at least to a depth of 60 feet, after which the walking-beam is used.

The derrick *Y* is placed upon one end of the machine, as

can be seen in Fig. 41. The transverse drive shaft *a*, which is rotated by an engine with any suitable connections, is also placed upon the main frame of the machine. This shaft has a crank to which one end of the rod *c* is attached by the

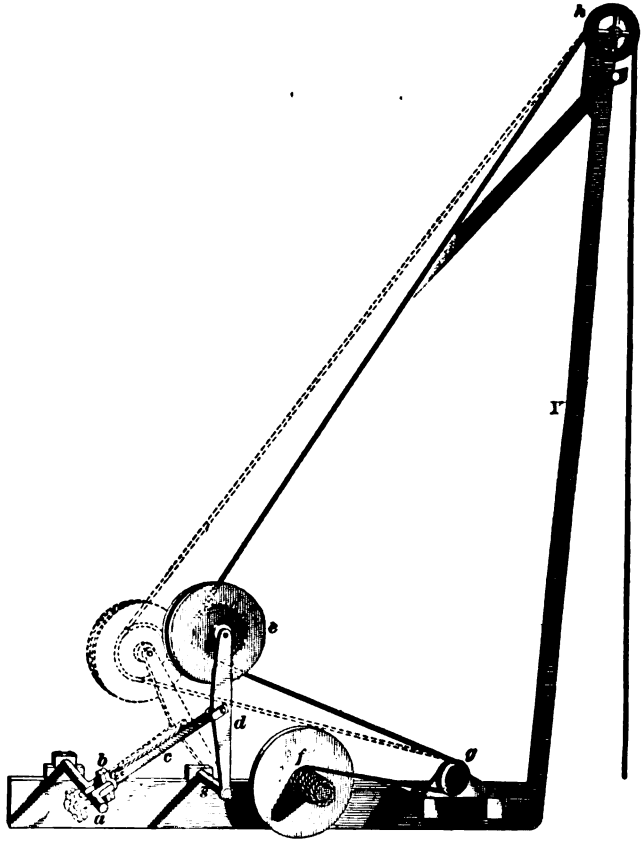

FIG. 42.

strap *b*. The other end of the rod is attached midway between the ends of the lever *d*, which is rigidly connected to the rocker-shaft *s*. The deeply grooved pulley *e* is journaled at the end of the lever *d*, and is adapted to receive the drill rope. It has a wide flange on one side to guide and steady the rope, which has a cumulative vibration during

the process of spudding, as drilling with this device is called.

The drill rope, which is wound upon the windlass *f*, passes over the guide-pulley *g* and the pulleys *e* and *h*, and its end is attached to the string of tools.

When the drive shaft *a* is rotated, the crank causes the lever *d* and the pulley *e* to move to and fro, as shown by the dotted lines. As this pulley is at the bight of the drill rope, it will be seen that the rope is alternately quickly pulled in and paid out and the tools given a reciprocating motion.

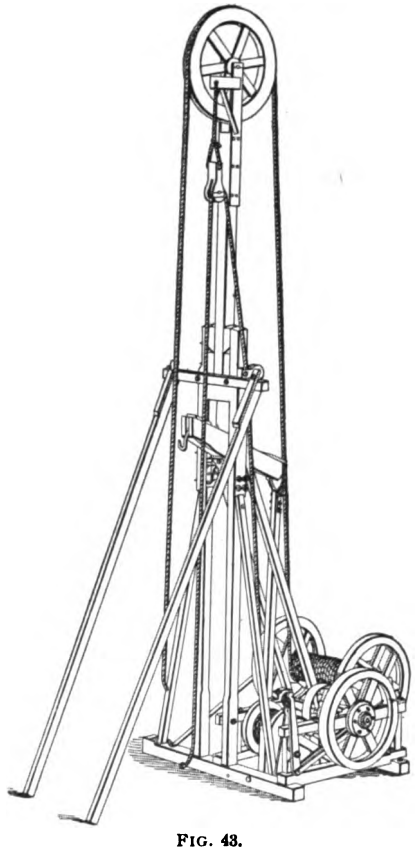

FIG. 43.

68. Fig. 43 shows a portable boring rig, which is moved from place to place in wagons; it is similar in its operation to other rigs and need not be explained after what has already been given.

ROTARY BORING.

69. Any form of boring in which the cutting-tool is turned and pressed forward at the same time is termed **rotary boring.** Except where the rock is hard, it is the most rapid and efficient, and even under such circumstances rotary boring is best if diamond bits are used.

The action of a rotary bit differs from that of a percussive one in that it cuts in planes nearly perpendicular to the axis of the hole, while the percussive bit cuts in planes parallel to the axis of the hole.

FORMS OF STEEL BITS FOR ROTARY BORING.

70. A rotary drill with a steel bit can not bore a hole in very hard rock, and even in boring moderately soft rock great care must be exercised in order to give the bit the best form. For example, the bit of a rotary drill can not be made even approximately the same shape as a bit for a percussive drill. For example, if a bit shaped like that shown in Fig. 44 was forced deeply into the rock *R*, it could not turn, and if great force was used in an endeavor to turn it, it would break. Even if little pressure was put upon the bit when turning from *a* to *b*, as indicated by the arrows, the sharp edge would either break or turn over.

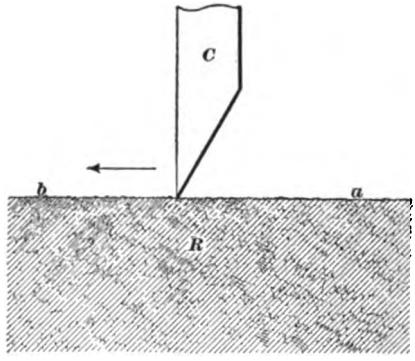

FIG. 44.

It is not sufficient, however, to make the bit of such shape as will prevent it from taking too great a hold in the rock. For example, the bit *C*, Fig. 45, which is so shaped, can not be forced into the rock deeply because the angle *a b d* is nearly a right angle, making *b d* nearly parallel to the rock surface. Such a bit would be very strong,

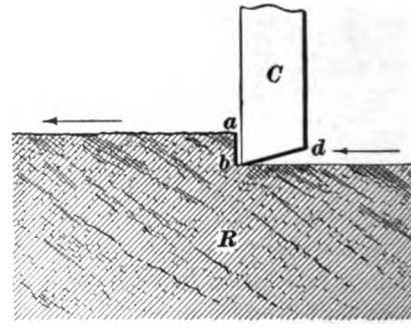

FIG. 45.

but it would form a step *a b* which would be very difficult to remove, and consequently the bit would require an enormous force to turn it in the direction indicated by the arrows.

71. The proper shape for a steel bit for rotary boring is shown in Fig. 46. The edge *b c* is nearly parallel to the rock surface, which prevents the bit from taking too great a hold in the rock. It will be observed that the edge *a b* is inclined so as to make the angle *a b c* quite acute, and at the same time throw the cutting edge *b* in advance, in order to give the bit a chance to both cut and lift the step at the same time. The material is therefore removed with the least amount of power when the bit *C* is rotated as indicated by the arrows. Figs. 44, 45, and 46 do not represent real elevations or perspective drawings of bits in holes, but simply show the principles upon which efficient or defective bits are made, and will therefore enable the student to understand the proper shape of good bits, which are shown in connection with the drilling-machines described later.

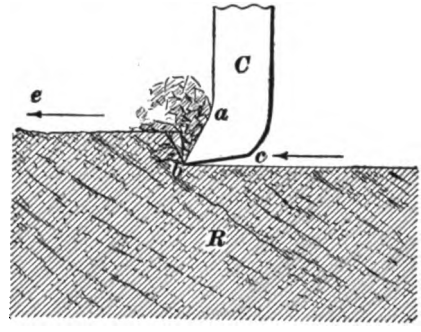

FIG. 46.

AUGER HAND-DRILLING MACHINES.

72. Hand-drilling machines for rotary boring are principally used in coal-mines and for boring in soft rock. There are three classes of these machines: (1) Those in which the cutting bit is advanced by a feed-screw having from 6 to 14 threads per inch and turned with a crank attached directly to one end of the feed-screw. (2) Those having variable feeders, which advance the bit 1 inch in

from 6 to 100 revolutions. (3) Those provided with a pawl and ratchet-wheel for boring holes close and parallel to a wall face; they are called **ratchets.**

POSTS AND GRIPS FOR HAND-DRILLING MACHINES.

73. On account of the reactionary force produced by all rotary drills, it is necessary to have some form of post or grip to hold such machines in place or up to their work.

74. A very common form of post is shown in Fig. 47. The post *P* is set up a short distance from the working-face and inclined with its foot inwards. The pin *p* is inserted into the bottom, or, if the bottom is soft, into a plank placed thereon, and the post tightened by the jack-screw being forced by means of the lever *j* tightly into a pick hole made in the roof. When this is done, the short drill *a* is put in the socket on the feed-screw and the drill run through the post. The nut or cup is placed in whichever notches will give the drill the proper elevation. The crank on the end of the feed-screw is then turned until the short drill has bored a distance equal to its length, when it is taken out, the nut screwed up to the socket, and the second drill *b* inserted. Finally, the third drill *c* is used, and this usually completes the hole. The twist on these drills automatically cleans the hole, but before the charge of powder is inserted a scraper is used to thoroughly clean it.

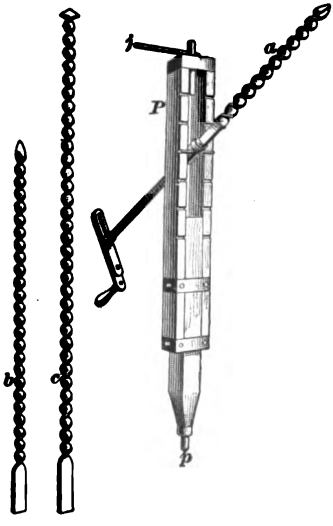

FIG. 47.

The reason several drills of different lengths are used is to produce steadiness and obviate the necessity of moving

the post forwards after each drill is advanced; for instance, if the long drill *c* is used first, the post *P* must be set back from the working-face so far that serious wabbling will be produced while turning the crank, and when the feed-screw has reached its limit the post will have to be moved forwards. The length of the post *P* is varied to suit the thickness of the seam at the place where it is to be set up by sliding the middle piece between the other two, and finally inserting iron pins in the holes which pass through the lower bands and the three pieces which comprise the woodwork of the post.

75. Fig. 48 shows an iron post with the lengthener at the top and the jack-screw at the bottom. This is the better arrangement where the seam is thick, but in any case where the seam is not over 6 feet thick it is more convenient to have the jack-screw at the top of the post. The feed-screw, and with it the drill, is turned by a system of bevel-gears and a side crank, which must be turned a number of times for each turn of the large gear-wheel on the feed-screw. There is a feather or projection within the large gear-wheel which works in a longitudinal slot in the feed-screw, by which means the feed-screw is turned and at the same time passed through the large gear-wheel. The frame carrying the gear mechanism slides upon the

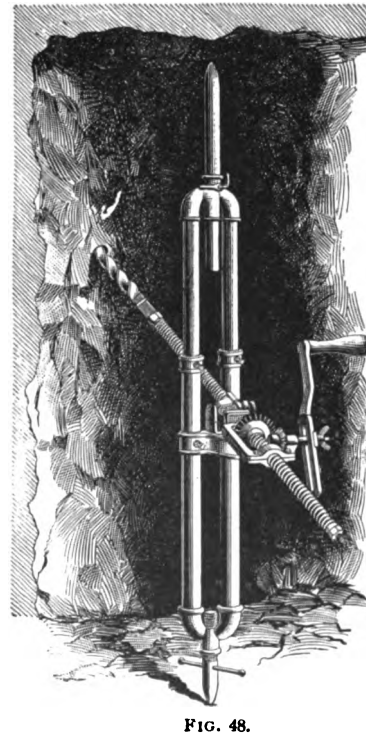

FIG. 48.

two legs of the post and is held in any position by set-screws.

76. Fig. 49 shows a post, the framework *P* of which is made of cast steel and is double for almost its entire length. The foot pin *f* is short, and the jack-screw *j* is placed at the top and turned by a wheel. This post is very rigid, and being notched from top to bottom, holes can be bored at almost any level. The drilling-machine used with this post is provided with beveled mechanism and two side cranks, and is used principally for drilling long holes approaching old workings containing accumulations of gas or water, providing transmitted energy, such as electricity or compressed air, is not available to run power drills.

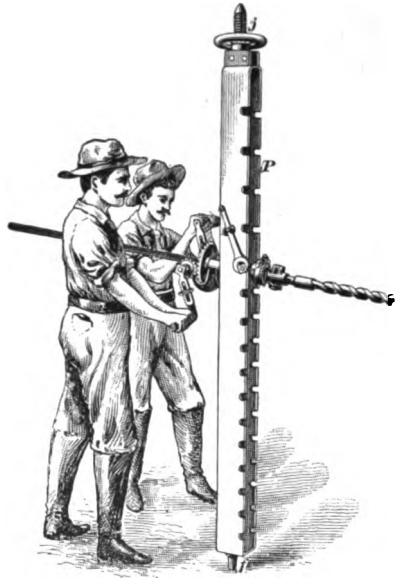

FIG. 49.

77. It often happens that the seam of coal is so high that posts are impracticable; in such cases, grips which are fastened to the working-face are used. Fig. 50 shows a very simple form of grip.

In setting up this grip, a short hole is bored near where the regular hole is to be started and the bar *g*, which has several upward teeth on its end, is inserted in the hole and an iron wedge driven in below it. This securely fastens the bar, and the teeth which are forced into the top of the short hole near its back prevent the bar from being pulled out by the reactionary force of the drill. The support which holds the cup *b* is pivotally connected to the end of the bar *g*, and adapts itself to the direction of the reaction-

ary force produced by turning the feed-screw *f*. The preliminary hole is drilled with a churn-drill, or special small

FIG. 50.

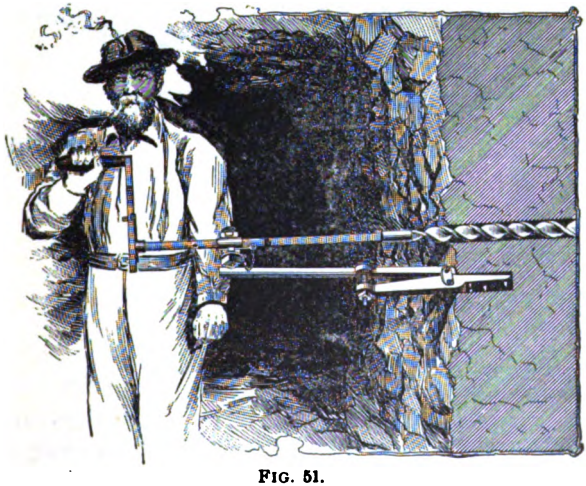

FIG. 51.

auger as seen standing with the drills at the face. The crank shown is of the duplex type, and enables the operator

to use both hands. It is evident that holes can be bored in many directions with one setting of the bar, and an old hole may form a support for the bar.

78. Fig. 51 shows an excellent grip, which can be put in place quickly, there being no wedge required as in Fig. 50. Aside from the rapidity with which this grip can be set in place, it has the additional advantage of gripping the coal or rock at the back of the preliminary hole, and consequently the material surrounding the grip does not become shattered and allow the bar to fall away during the operation of boring, as is often the case when a wedge is used to fasten the bar to the coal or rock.

AUGER POWER DRILLS.

79. Fig. 52 shows a rotary drill run by compressed air and also fed by air. The engine which drives the drill is a

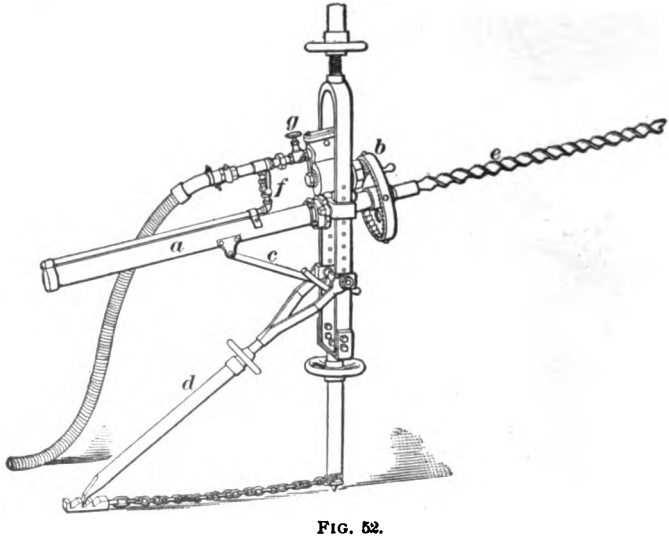

FIG. 52.

small rotary one placed between the bifurcations of the post and above the supports which hold it in any desired position. Instead of a feed-screw, there is a piston-rod in the cylin-

der *a*, which is acted upon by the air, and forced outwards as the hole advances. The small pinion on the motor shaft gears internally with the wheel *b*, which turns the piston-rod and auger *e*. It is clear that while the wheel *b* turns the piston, it also permits it to move longitudinally. This is accomplished by means of a feather and slot, as in other drills. The brace *c* supports the extra weight at the rear of the post, and the brace *d* makes the post more rigid. The auger can be advanced with a constant pressure, and therefore the bit is not likely to break when it meets any hard substance. The air is admitted to the cylinder *a* through the valve *f*, and to the rotary engine through the valve *g*.

80. Fig. 53 shows a Jeffrey rotary electric coal drill. A small motor of from 1½ to 4 horsepower is enclosed in a

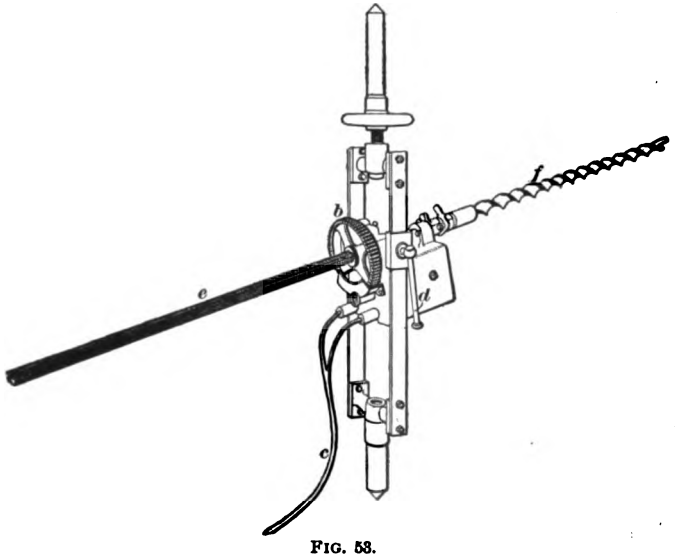

FIG. 53.

case, and on the end of its armature shaft is a small pinion which gears with the large wheel *b*. The current is supplied through the cable *c*. The drill can be given any elevation and clamped at any level by the lever *d*. It will be noticed that there is a longitudinal slot in the feed-screw *e*, in which

a feather or projection on the gear-wheel *b* runs as the feed-screw and drill *f* are turned. There are two drills used for each hole over 3 feet deep; one is 3 feet long and the other 6 feet long. The time required to drill a 6-foot hole in ordinary bituminous coal with this drill is from 1 to 4 minutes.

THE RATCHET.

81. It frequently happens in mining work that holes must be drilled close to and parallel with the roof, floor, or sides of an entry or breast. This can easily be accomplished with such machines as shown in Figs. 54 and 55, providing it is not required to bore the holes closer than a few inches to the roof, floor, or sides of the working place and the material is not very hard; but where the holes must be bored next the roof, floor, or sides, or some distance from them, in reasonably hard rock, such as soft sandstone, the ratchet is used. It is the most rigid of hand-drilling machines for rotary boring.

82. Fig. 54 shows a very strong form of ratchet which is largely used for tunnel and mine work. This ratchet is shown in position for drilling a hole in the rock overlying

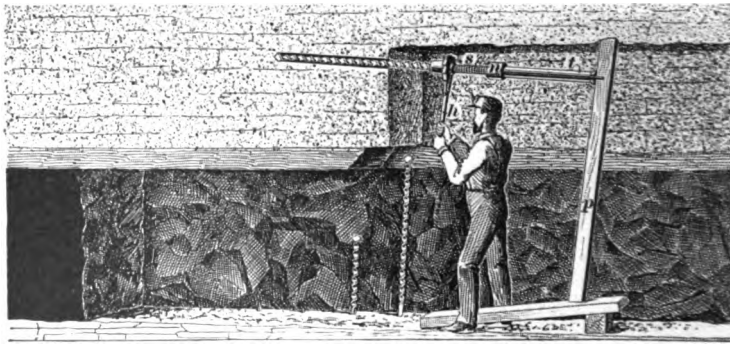

FIG. 54.

the coal. The tube *t* is about 2½ feet long and 3 inches in diameter, and has the threaded nut *n* welded to one of its ends. The feed-screw *s* is turned by the lever *h*, which

operates a ratchet-wheel just back of the socket in which the end of the drill is placed.

To set up the ratchet, a short hole is dug in the proper place on the face of the rock, and another in the roof back from the rock face a distance a little greater than the combined length of the shortest drill and the ratchet. One end of the post *p* is then inserted in the hole in the roof, and the other end is placed upon an inclined tie as shown, and finally the post is tightened by striking it near the bottom with a

FIG. 55.

sledge or hammer. It is evident that the greater the reactionary force the tighter the post will get. The end of the shortest drill is then put in the socket of the ratchet and all is lifted near the roof and the bit of the drill inserted in the hole which was picked in the face of the rock. The rear end of the tube *t*, which is made slightly conical so as not to split the post and at the same time not slip when the drill is being operated, is finally placed against the post and the ratchet and drill tightened in place by turning the tube or operating the handle *h*.

When the feed-screw *s* is run out and the short drill advanced as far as possible, the ratchet is taken down and the next longer drill inserted, and the operation repeated until the hole reaches the required depth. During the operation of the ratchet the tube is prevented from turning by a curved pin engaging with the post *p*. Owing to the heat and friction produced by boring with the ratchet even in moderately soft sandstone, the bits must be changed and sharpened frequently.

83. Fig. 55 shows another form of ratchet in place for boring a hole close against the bottom. In this case it is not necessary to incline the post, for almost the entire reactionary force is resisted by the lower end of the post *P* which is inserted into the bottom. The man is operating the machine, and it will be seen that the tube is prevented from turning by the lever and pin *C*.

APPLIANCES USED IN DIAMOND DRILLING.

84. The diamond drill consists essentially of a tool having black diamonds or carbons set in its face, and so arranged that the tool can be rotated in such a manner as to cause the diamonds to cut the rock, while a stream of water removes the cuttings as fast as they are formed. The piece in which the diamonds are set is called the bit. The string or line of rods which connect the bit to the operating mechanism is called the drill-rods. In mining work, diamond drilling is usually done with the intention of bringing a solid core of the material passed through to the surface, and in such a case the bit is practically a section of pipe having diamonds set in its lower face.

FIG. 56.

85. Fig. 56 illustrates a diamond bit having diamonds *a*, *b* set in its face. The diamonds *a* cut on the outside and face of the bit, while the diamonds *b* cut on the inside

and on the face of the bit. The diamonds make sufficient clearance to permit the flow of water within and without the steel cylinder or thimble. Radial grooves are usually made in the face of the thimble between the diamonds, for the purpose of providing an easy passage for the water which carries away the debris.

86. When it is not desired to obtain a core from the formation, a bit with a solid face may be used. This is in reality simply the end of the bar of iron or steel having diamonds so set as to remove all the material before it. Water to wash away the cuttings is furnished through small holes drilled between the diamonds in such a manner as to connect with the hole in the drill-rods.

87. Two kinds of diamonds, carbons and borts, are used in setting bits for diamond-drill work. The carbon is found in opaque nodules of irregular shape, black on the outside, and of various shades of gray when broken. It has no cleavage planes, differing in this respect from the brilliant, and thus is especially fitted for diamond-drill work in hard rock, on account of the fact that the carbons simply wear away gradually without splitting or cleaving. The borts is really a semitransparent or poor diamond. In general appearance the rough stone is similar to a rough brilliant, but has a somewhat different crystallization. Carbons are found in Brazil, borts in Brazil and South Africa. For hard rock the drills are set with carbons alone; for medium rock, with part carbons and part borts; for soft rock the bit is occasionally set with borts alone. Borts are as hard as the carbons, but are not as tough. Having cleavage planes, they shatter if used in certain classes of hard rock, while the carbon will wear away slowly without danger of breaking.

88. Fig. 57 shows the bottom of a diamond-drill hole in plan and section. The core C is formed by the bit cutting out the annular space $A\ S$. In order to bring this core to the surface, some device must be provided for breaking it off at the bottom and for holding it in the tubes while it is

being hoisted. The breaking of the core and the holding of it in the tubes is accomplished by means of a core-lifter, which consists of a ring so constructed that it will grip the core near its base whenever the rods are raised. Fig. 58 shows one form of core-lifter ring, and Fig. 59 shows the shell in which it operates.

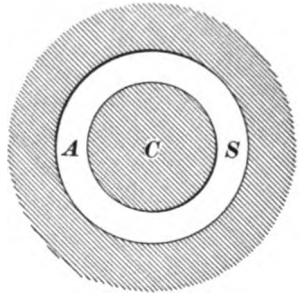

FIG. 58.

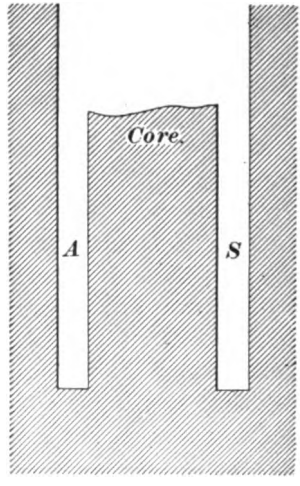

FIG. 57.

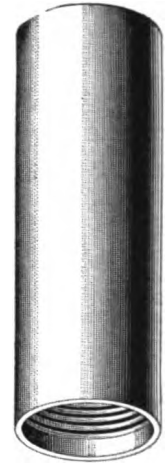

FIG. 59.

89. Fig. 60 illustrates the entire line of tools and appliances used in the ground for diamond drilling. It is a vertical section through a diamond-drill hole. The standpipe *n*, which is provided with a shoe *o*, is driven into the ground until it reaches bed-rock, for the purpose of protect-

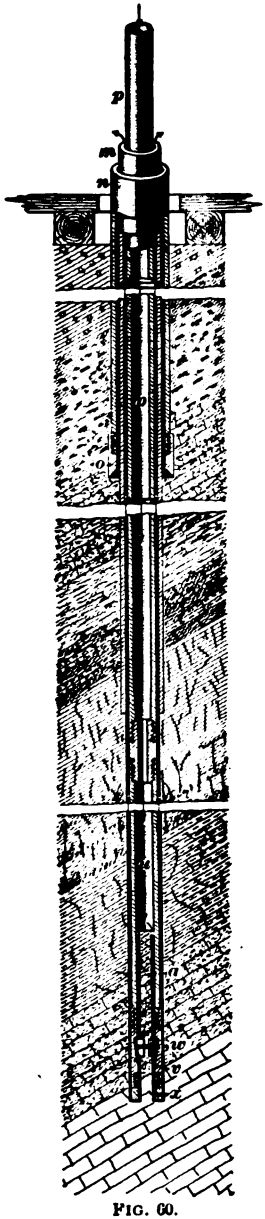

FIG. 60.

ing the drill hole. The casing *m* is put down through the upper formations, which tend to clog the hole or carry off the water used in drilling. The drill-rods *p*, which transmit power to the bit, are connected to the core-barrel *u*, which in turn is connected to the core-lifter shell. The bit *x* is screwed on the lower end of this shell. The water which is forced down through the center of the drill-rods *p* passes under the bit and carries the cuttings up through the annular space between the rods and the hole, or the rods and the casing, as indicated by the arrows. When the rods are lifted from the hole, the core-lifter ring *w*, which is always in contact with the core, slides down into the tapered recess in the core-lifter shell *v*, and bites or grips the core so as to break it off and retain it in the core-barrel.

The drill-rods are simply pieces of extra heavy pipe, and are joined together by inside couplings, which give a smooth external surface. The drill-rods are ordinarily in lengths of from 5 to 10 feet each, but where deep drilling is to be done the cost of these short rods becomes excessive, owing to the fact that the cost of so many couplings increases the cost and weight of the rods very much. Hence, for deep work special drill-rods from 20 to 30 feet long are sometimes employed. The drill-rods are always uncoupled in sections as long as the derrick will handle. There are

several other forms of core-lifters in use for special purposes, but this one has been selected as being the most common and illustrating the principle very well.

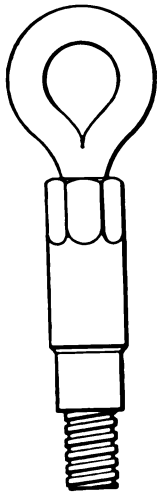

FIG. 61.

When it is desired to pull up an old casing or stand-pipe, this can sometimes be accomplished by means of an ordinary hoisting drum and rope. In other cases, it becomes necessary to put clamps on the casing and use jack-screws to pull it from the ground. By using sufficiently heavy screws, it is possible to exert a force which will part the casing or stand-pipe if it is too firmly embedded in the material, and then only a portion of the tube would be recovered. When the drill-rods must be raised for the extraction of the core or the renewal of the bit, the hoisting plug or lifting swivel, shown in Fig. 61, is screwed on the end of the rods.

90. For hoisting the rods some structure must be used. This may consist of a simple tripod made from three sticks of timber or poles. They are 20 to 30 feet long, joined at the top, and have a hoisting-block swung from the joint. If the hole is to be very deep, some more elaborate structure will be necessary, and in this case a special steel tripod, similar to that shown in Fig. 62, may be used, or a wooden derrick, similar to those used in the American Well-Boring Rig, may be constructed. As a rule, the simple tripod is all that is used for hoisting drill-rods in connection with diamond drilling.

91. In order that the diamond bit may cut properly, it has to be forced against the rock with great pressure while it is being fed forwards. To accomplish this, the machines which operate the rods must be provided with some form of feed mechanism. There are two general forms of feed mechanism in use, the differential feed and the hydraulic feed.

92. In the differential feed, the upper length of rods is provided with strong square threads and passed through

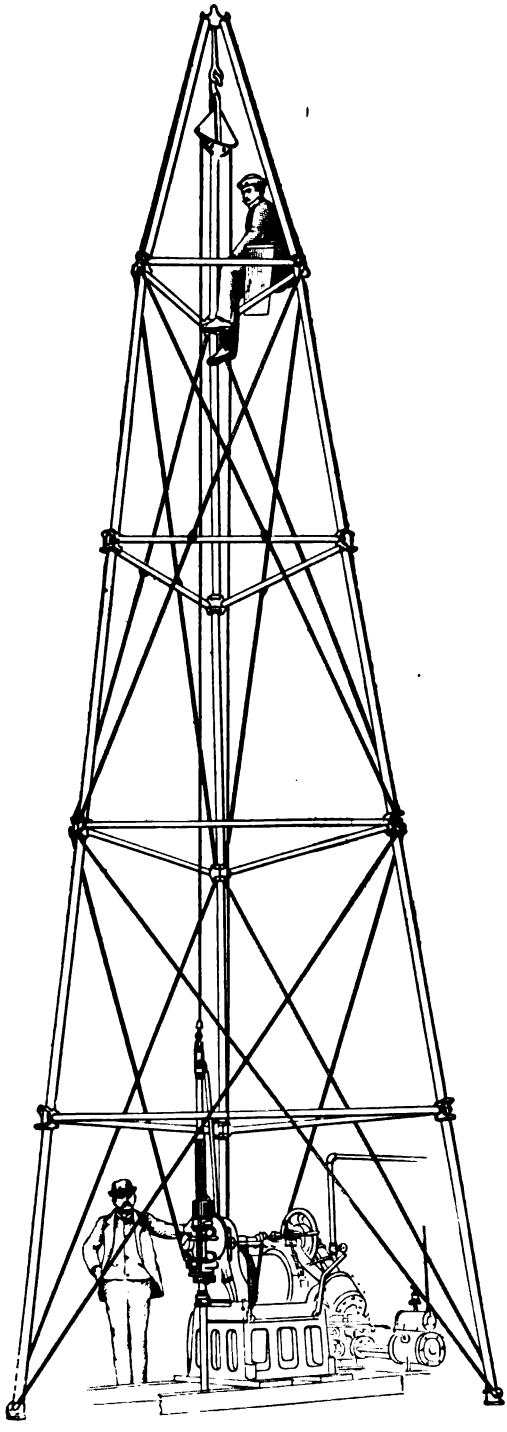

FIG. 62.

a nut which is rotated in the same direction as the rods, but not quite so rapidly, thereby causing a differential movement. To understand the principle of the differential movement, suppose the nut was held stationary, and that the rod and nut have each 2 threads to the inch, then for every two revolutions of the rod the bit would advance 1 inch, which is altogether too much cutting for the diamonds to do in two revolutions of the drill. Now, suppose again that the nut makes, say, 59 revolutions while the rod makes 60; the bit will advance only $\frac{60-59}{2} = \frac{1}{2}$ inch, or $\frac{1}{2 \times 60} = \frac{1}{120}$ of an inch for each revolution of the rod. Thus it is seen that a very small advance per revolution of the bit can be obtained by the above principle, and yet strong threads can be used to support the entire length of drill-rods.

93. If the differential feed were not provided with some method of relieving the excessive pressure, it would produce an enormous pressure whenever the bit encountered a hard formation. To overcome this, the feed mechanism is driven by an adjustable friction device, which allows the driving mechanism to slip with reference to the feed mechanism whenever the pressure upon the bit becomes too great. This slipping has the effect of giving the bit a finer feed in hard rock. Most machines provided with a differential feed have several sets of gears, by means of which the feed can be varied without the necessity of depending upon the slip of the friction device to produce finer feeds, the friction being intended only as a safety device.

94. In order to show the pressure on the bit, some machines are provided with special pressure registers or thrust indicators, which are so constructed that the thrust of the rods is received upon the pistons working against some liquid (usually glycerine), and the pressure of the liquid is shown by means of gauges. This device enables

the drill runner to tell instantly any change in the character of the formation through which the drilling is being done.

If the pressure on the bit, as shown by the gauge, rises, the driller knows that the bit has encountered a harder formation, and he reduces the feed by throwing in a different pair of gears or by changing the adjustment of the friction device through which the feed is driven.

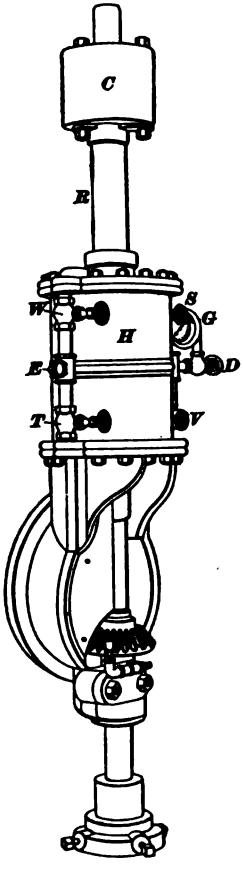

FIG. 63.

95. In the hydraulic feed, the pressure upon the bit is produced by water acting upon a piston in a vertical cylinder, and it is possible to observe at any instant the pressure upon the bit by means of a gauge on the cylinder. Consequently the driller can regulate the advance of the bit to the very best advantage. For instance, if the rock is hard the bit will advance slowly and the pressure in the cylinder rise, while if the rock is soft the bit will advance rapidly and the pressure in the cylinder fall. In the former case the driller lessens the supply of water, and in the latter case he increases it, keeping the proper pressure upon the piston and rods.

The water below the piston prevents the bit from sudden and rapid advance in case it is passing through a crevice or soft place in the rock, and in this way greatly protects the diamonds from sudden shock and possible displacement.

96. Fig. 63 shows a hydraulic-feed mechanism in which the ball bearings are incased as shown at *C*. The piston *R* moves in the hydraulic cylinder *H* as the drill-rods move, but it does not rotate as they do. Water is independently

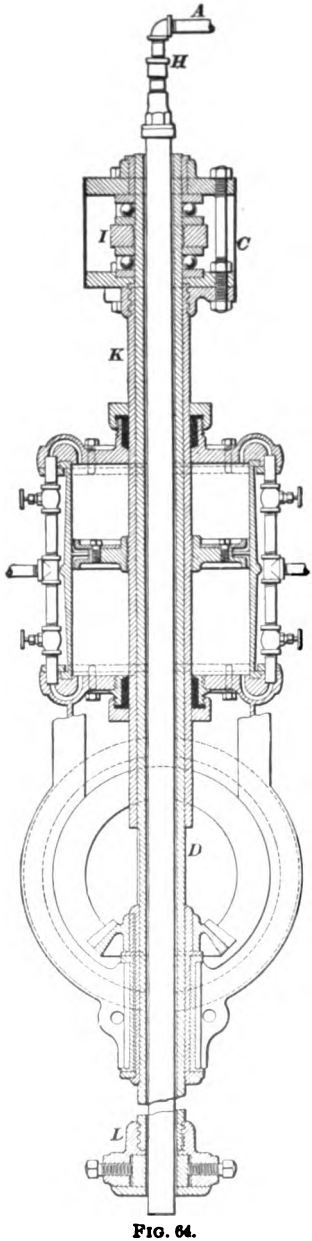

FIG. 64.

supplied above and below the piston within the cylinder by means of valves. The water is turned on by the valve *D* and admitted above the piston by the valve *S* and exhausted by the valve *W*. In like manner it is admitted and exhausted below the piston by the valves *V* and *T*, respectively. The valve *E* is the common exhaust. The pressure-gauge *G* is connected to the upper part of the cylinder, and registers the pressure upon the drill-rods and bit.

97. Fig. 64 shows a longitudinal section of a hydraulic-feed mechanism, in which the water-passages and the functions of the valves can readily be seen. The drive-rod *D* is connected to the drill-rods by the chuck or clamp *L*, and rotates within the hollow piston-rod *K*, being supported by the collar ball bearing *I* within the case *C*. Water is forced into the drill-rods through the pipe *A* and the swivel *H*. Reverting to Fig. 63, it will be now understood that in order to increase the pressure upon the bit, all that is necessary to do is to open valve *S* wider and, if necessary, close *W* somewhat, while at the same time *V* may be closed a little and *T* slightly opened. If, however, there is too much pressure upon the bit, the operation is reversed. There are

a number of ways of effecting the desired pressure, which can be readily acquired by a knowledge of the principle just given and a little experience.

98. The hydraulic feed just considered is termed the single-cylinder feed in contrast with the double-cylinder feed shown in Fig. 65. This machine has a hollow drive tube *T* connected to the two piston-rods *P*, *P* by the cross-head *C*. The two cylinders are shown at *H*, *H*, and the swivel connecting the water-supply pipe *F* and the drill-rods is shown at *G*. The water pressure upon the pistons is regulated in a manner similar to that previously explained.

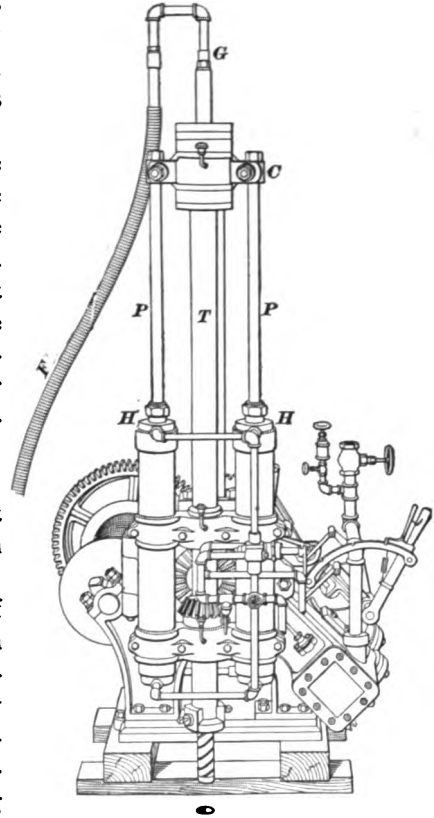

FIG. 65.

99. In order to resist the great pressure upon the bit and the drill-rods, some special form of bearing has to be used in connection with the diamond drills. In very small machines, friction-plates are sometimes employed. This bearing consists of a number of thin steel plates placed between the bearing faces. If the plates are perfectly true, there is a differential motion; that is, each succeeding surface moves more rapidly than the preceding, and so the wear is divided among the several plates. Another form of bearing which is very much used

is the ball bearing. This is illustrated at *C*, Fig. 64, and consists of a series of balls placed in a circular track or race between two plates. Most ball bearings for diamond drills are so constructed that they can take thrust in either direction; that is, they can take an upward thrust owing to the feed pressure upon the drill-rods, or they can take the weight of a very heavy set of drill-rods hanging upon them.

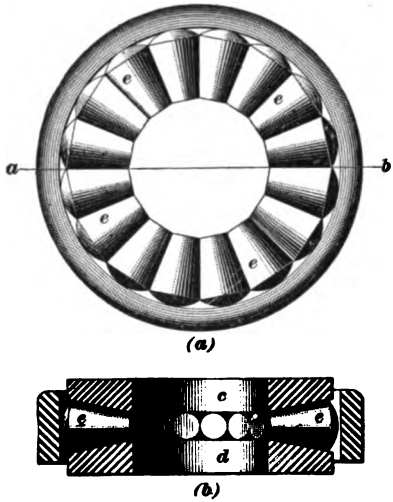

FIG. 66.

For heavy work there is a special form of bearing used by some makers. This is illustrated in Fig. 66, in which (*a*) is a plan and (*b*) a section through *a b*, and consists of two bevel plates *c*, *d*, between which are placed a series of conical rollers *e*, *e*, etc. The advantage of this form is that the conical rollers tend to travel in a circle, thus doing away with the pressure on the outside of the bearing caused by the balls having a tendency to go in a straight line. When a ball-thrust bearing is used to resist great pressure and to run at a high speed, this pressure of the balls against the outside of the track or race becomes excessive, and often results in the destruction of the balls and the bearing.

MACHINES USED IN DIAMOND DRILLING.

100. In order to give a clear understanding of the machines used in diamond drilling, it may be well to thoroughly explain one, and then refer to the different points in the others. Fig. 67 illustrates a machine having a capacity for moderately deep boring. The machine is driven by an engine having two steam-cylinders *H*, *H*.

This engine may be reversed by means of the reverse lever *I*. The large gear *K* is used to drive the hoisting drum *L*. The hoisting drum may be driven at different speeds by

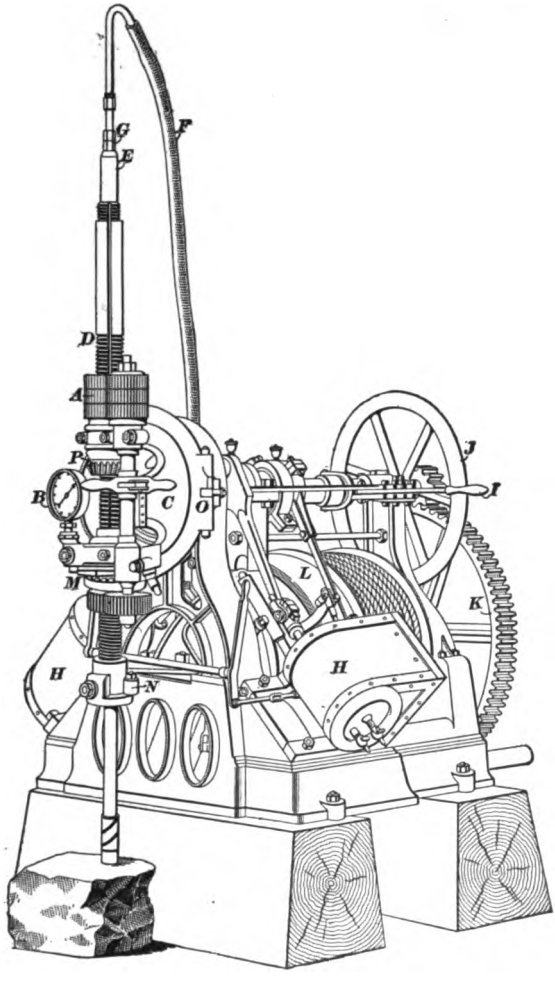

FIG. 67.

means of a series of change gears, which can not be seen in this view. The hand-wheel *J* is used to turn the engine

shaft and gearing when it is desired to throw in a different series of gears for the operation of the hoisting drum. The feed can be changed by means of the handle *C*, which throws in any series of the gears *A* or throws them all out. The roller bearing *M* receives the thrust, and is so arranged that it registers thrust in either direction by means of the thrust register and the gauge *B*. The chuck *N* at the bottom of the feed-screw *D* holds the drill-rods and drives them. The swivel *G* connects the water-supply pipe *F* to the drill-rods *E*.

There is a thread on the upper end of the feed-screw *D*, so that another chuck can be placed on that end of the feed-screw; or the chuck *N* may be placed at the upper end of the feed-screw when drilling upwardly inclined holes. This drill is provided with a swinging head. There is a latch bolt *O*, which can be loosened, and on the opposite side of the head there is a similarly constructed hinge. By means of this device the entire feed mechanism can be swung from over the hole. The feed mechanism is driven by means of a pair of bevel-gears *P*. When the mechanism is swung from over the holes, the bevel-gears are disconnected, and hence the drilling mechanism is thrown out of gear, so that the engine may be used to operate the hoisting drum *L* for removing the rods from the holes.

In this machine the engine cylinders are placed on the opposite sides of the frame. This gives a well-balanced machine, but at times other considerations make it desirable to place both cylinders on one side of the machine, as shown in Fig. 65.

101. Fig. 68 illustrates a very large diamond drill intended for deep boring. This machine has a capacity of drilling to a depth of about 6,000 feet, and it is provided with a single-cylinder hydraulic feed and has a ball bearing incased at *C*. This bearing takes the thrust or pressure of the drill-rods either while drilling or when they are hanging free in the hole. The hollow piston-rod does not revolve. The hoisting drum is placed on the back of the machine,

where it can not be seen in this view. The machine is driven by two vertical engines, placed centrally behind the feed machanism, as shown in the illustration.

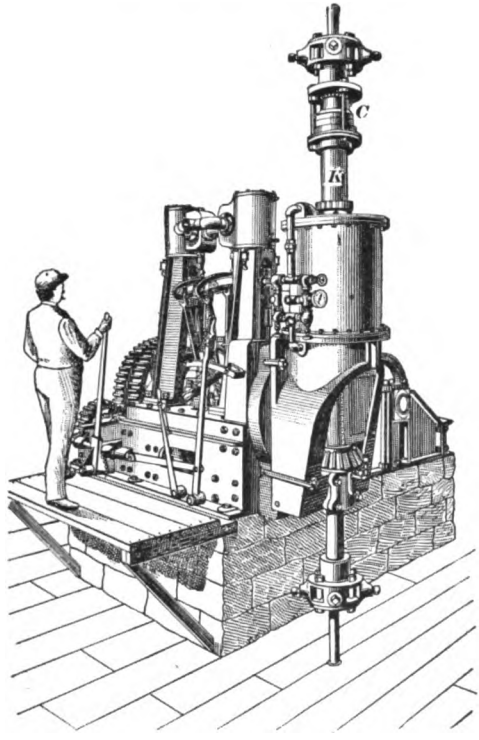

FIG. 68.

102. Fig. 69 illustrates another form of machine, which has a capacity of drilling to a depth of about 2,000 feet. It is provided with a double-cylinder hydraulic feed and has a fixed head, making it necessary to remove the machine from over the hole for changing the rods, and this necessitates some form of flexible or telescopic joint in the steam and exhaust pipes. In the machine illustrated this is accomplished by means of a bracket *C*, which holds the steam-pipe *A* and the exhaust-pipe *B*, so that as the drill is moved backwards or forwards, the pipes connected with the engines

work in and out through the stuffing-boxes shown in the illustration. The gearing for changing the speed of the hoisting drum D can be seen at the back of the machine. The large gear E is on the shaft carrying the hoisting drum, and when the small pinion F on the engine shaft is brought

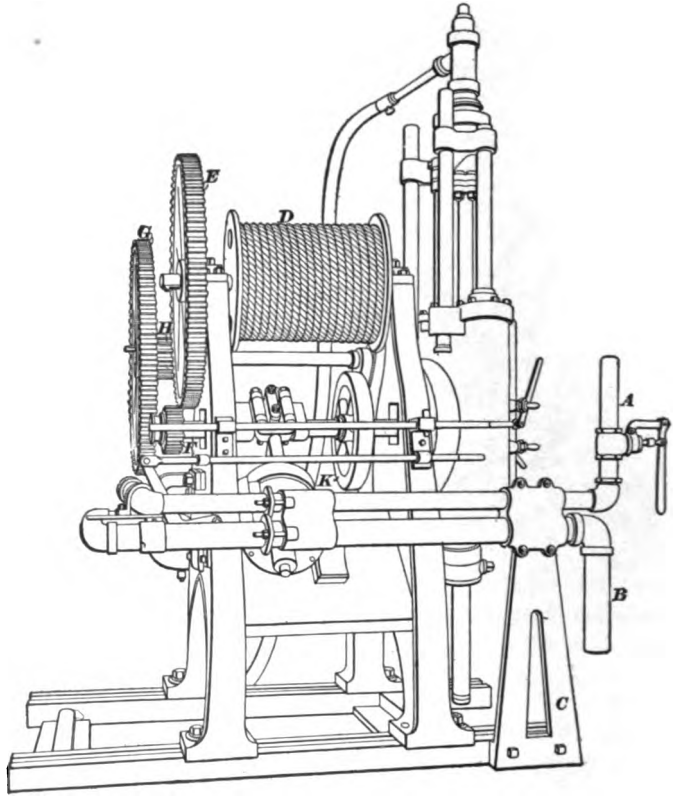

FIG. 69.

into mesh with this gear, the drum will be driven rapidly. On the other hand, if the gear F is brought into mesh with the gear G, and the pinion H into mesh with the gear E, the drum will be driven slowly. Of course, when the drum is driven more slowly by the same engine, it has greater lifting power. The small hand-wheel K is used in turning

the engine shaft so as to bring the gears into mesh with each other. The different combinations of gearing can not be changed while the machine is running.

103. Fig. 70 illustrates a small diamond drill mounted on a truck so that it can be taken from place to place easily. This style of mounting is especially useful when it is desired

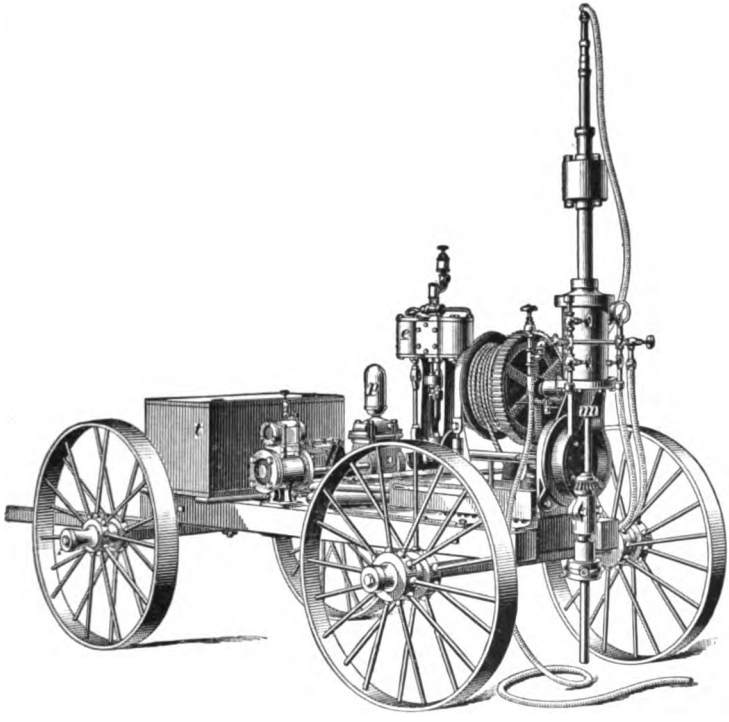

FIG. 70.

to drill a large number of comparatively shallow holes in the same locality. The feed-pump *p* furnishes water to the diamond drill. The tool-box *t* is placed at the front of the truck. The engine *e* is used for operating the drill. This drill is provided with a hoisting drum and a single-cylinder hydraulic feed; it is of the general class of machines having a fixed head, and hence must be removed from over the hole when it is desired to remove the rods.

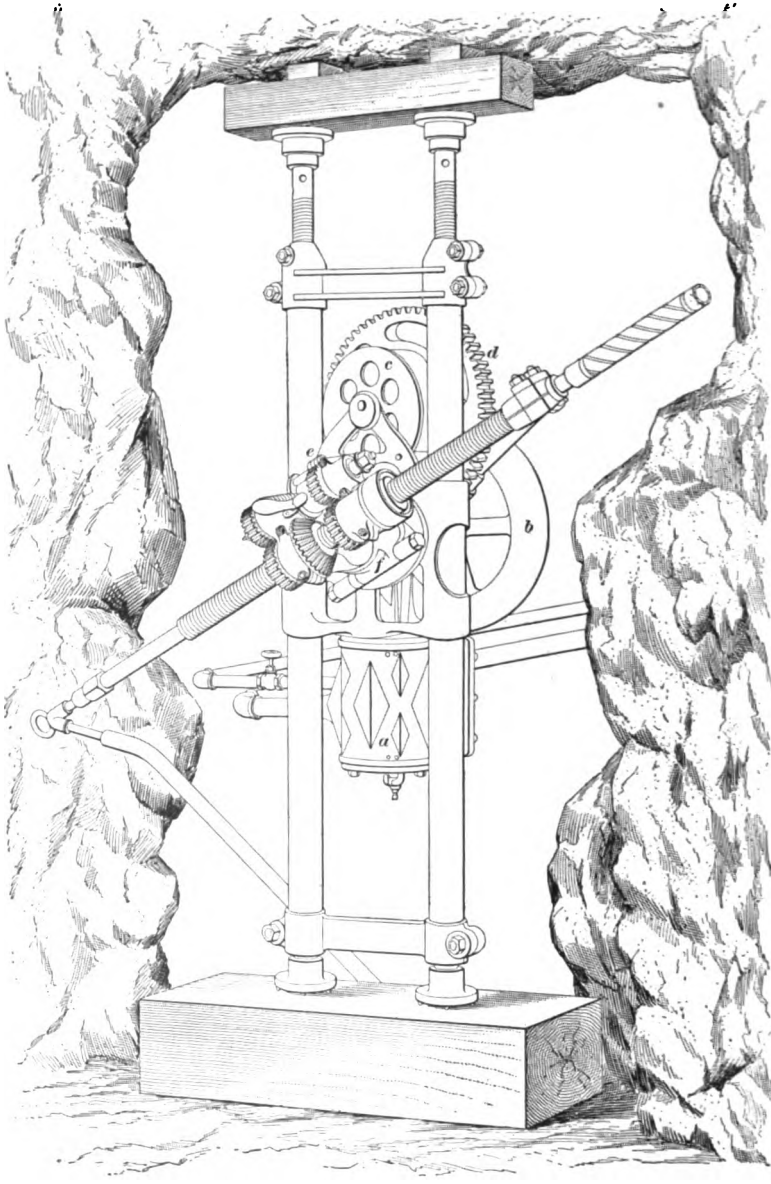

FIG. 71.

104. Fig. 71 illustrates a small diamond drill mounted on a column for work in a mine. Diamond drills are usually mounted on double columns, as shown in this illustration. This machine is driven by a single-cylinder engine *a*, and hence requires a fly-wheel *b*. The hoisting drum *c* is driven

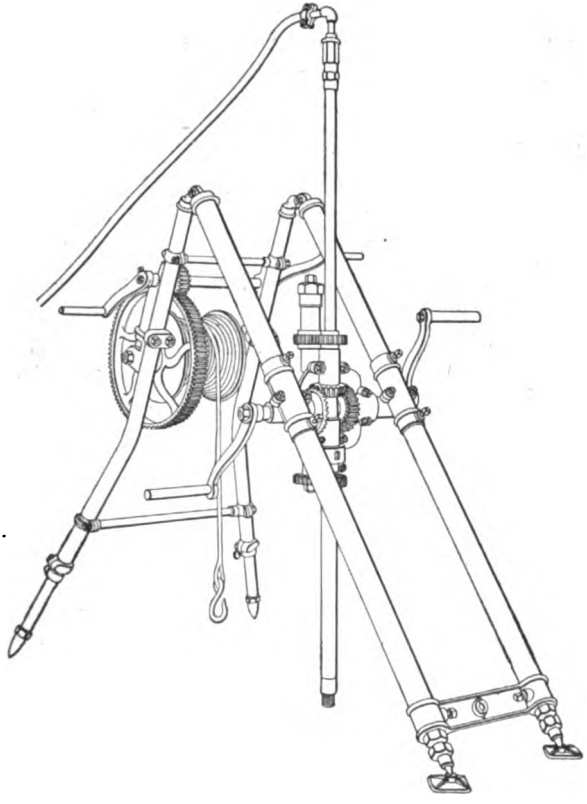

FIG. 72.

by means of the gear *d*. The machine as illustrated is set to drill an upwardly inclined hole. This machine is provided with a differential gear feed and with a swinging head. The bolt *f* for fastening the head can be removed and the head swung back on the hinge *f*.

105. Fig. 72 illustrates one form of a hand-power diamond drill. There is also a hand hoist attached to the back of the frame on which the drill is supported. This hoist is not regularly furnished with the machine, but may be attached when it is desired to drill comparatively deep holes. This machine can be adjusted for drilling at an angle, and is provided with a differential gear feed ; it can be driven by horses or a portable engine if desired, by simply removing one or both of the cranks and substituting a belt-pulley.

106. Fig. 73 is another form of a hand-power diamond drill which is mounted on columns *a*, *a*, provided with swinging joints where they are connected to the wooden frame by means of the swiveling pedestals *f*, *f*. The columns *a*, *a* can be adjusted to any angle with the wooden frame by means of the braces *p*, *p*. When the drill is used underground, it may be set up in a manner similar to that illustrated in Fig. 71, the screws *s*, *s* being placed against the roof of the opening.

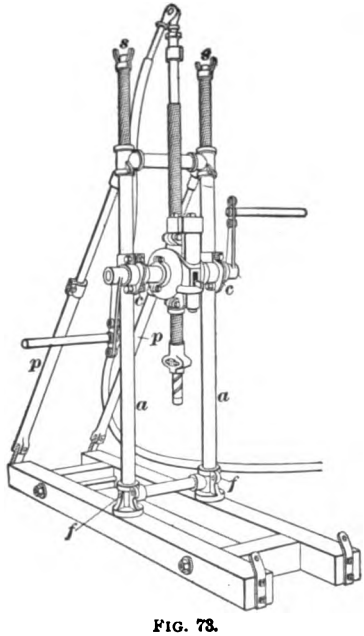

FIG. 73.

107. In order to remove the drills shown in Figs. 72 and 73 from over the holes, for handling the rods, the entire mechanism is usually moved. In Fig. 72 this can be accomplished by simply loosening the collars on the columns and sliding the drill down on the frame. By leaving the upper collars in place, the machine can be returned to exactly the position it occupied previous to the changing of the drill-rods. In the case of the drill illustrated in

Fig. 73, the same thing may be accomplished by simply loosening the bolts at the bearings *c*, *c* and lifting the entire mechanism out of its mountings. The mountings are provided with rectangular faces, against which the boxes fit, and so the machine can be replaced in exactly the same position it occupied previous to the changing of rods.

The hand-power diamond drills are usually guaranteed to bore holes from 350 to 400 feet deep, but have been used for drilling holes between 600 and 650 feet in depth.

THE VALUE OF THE RECORD FURNISHED BY THE DIAMOND DRILL.

108. This naturally divides itself into two parts:

1. The value of the record furnished by the core.

2. The amount of dependence that can be placed upon the apparent location of any point in a diamond-drill hole.

THE VALUE OF THE RECORD FURNISHED BY THE CORE.

109. With regard to diamond drilling, all ore bodies may be divided into three classes:

1. Bodies of material having a uniform composition, a low value per ton, and depending upon the existence of large masses for their market value, such as iron ore, salt, gypsum, coal, etc. The diamond drill furnishes an excellent means of prospecting for any of the materials that come under this class.

2. Bodies of material having a somewhat less uniform composition, a higher value per ton, and usually associated with more or less gangue, such as the ores of lead, zinc, copper, etc. The value of the diamond drill in prospecting for such formations varies inversely as the amount of the precious metals contained in the ore; that is, if a deposit is mined for lead, zinc, or copper, the ore must be of a somewhat uniform nature, while if it is mined mainly for the

precious metals, the value may and usually does vary from point to point, and in places the vein may be cut out entirely by horses or barren portions of rock. Thus, the liability of the diamond drill passing through abnormally rich or through barren portions of the vein is very much increased.

3. This class consists of rich veins of gold telluride or silver minerals, such as sulphides, etc. In prospecting for this class of material, the diamond drill is of very little use, for two reasons: (1) The valuable material is often so soft and friable that it is liable to become ground to a powder and washed away by the drilling water, thus leaving no record of its existence. (2) The veins are so erratic that the drill is liable to cut them either in barren portions or to follow a rich seam, thus giving indications very much above or below the true value.

The three divisions given above grade more or less into each other, but they serve as headings under which to consider the subject.

110. From the foregoing, the following general rule may be derived: *The value of the record furnished by the diamond-drill core varies inversely as the value per ton of the deposit sought.* Or, as stated in different words, the value of the record furnished by the diamond drill is greater when prospecting for low-grade uniformly distributed ores than when prospecting for high-grade irregularly distributed ores.

111. The diamond drill has been used with great success in prospecting for bonanzas or rich deposits of the precious metals, which occur in well-defined pockets or large masses. If the diamond drill encounters native copper, the metal clogs the space between the diamonds, thus preventing the boring, or it may even block the bit entirely, causing the rods to twist off. The diamond drill has been used very successfully in prospecting for low-grade gold deposits, such as the blanket reefs of South Africa.

112. When the diamond-drill hole cuts the formation at an angle, the core may show the angle the strata makes with the center line of the hole, but it gives no record as to the direction of the dip of the strata. Fig. 74 shows a diamond-drill hole passing through an inclined stratum, and Fig. 75 shows the core taken from the same formation. During the operation of drawing the rods from the hole, it is more than likely that the core will be turned from its original position, thus giving no idea as to the direction of the dip of the stratum. This may be in a measure overcome by the drilling of two holes near together and comparing the records. When a number of holes are drilled, the dip of the various strata is usually determined. When prospecting for deposits of the first class, this lack of information in regard to the dip is of less importance than when searching for thin veins of more valuable material.

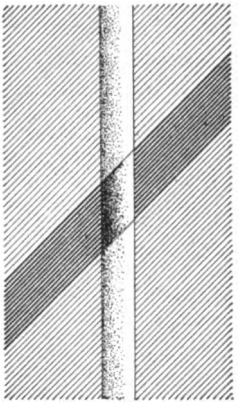

FIG. 74.

FIG. 75.

THE DEPENDENCE THAT CAN BE PLACED ON THE APPARENT LOCATION OF ANY POINT IN A DIAMOND-DRILL HOLE.

113. It was originally supposed that all diamond-drill holes were straight and true; that is, that in no matter what direction the hole was started, it would continue in that direction throughout its entire course, but as deposits discovered by the diamond drill came to be opened up, the lower ends of the holes were frequently found a long distance from their supposed positions. This variance led to a great many theories as to the cause of the *drift*, or change of direction, some advancing the idea that the drill hole had

a tendency to go across the rock formation, while others claimed that it had a tendency to follow the strata. In fairly hard and uniform material it was observed that, as a general rule, all inclined holes had a tendency to rise as they advanced, while vertical holes would sometimes take a spiral course or travel off to one side.

114. Fig. 76 represents a diamond-drill hole put down south of the present "D" shaft of the Chapin mine. After

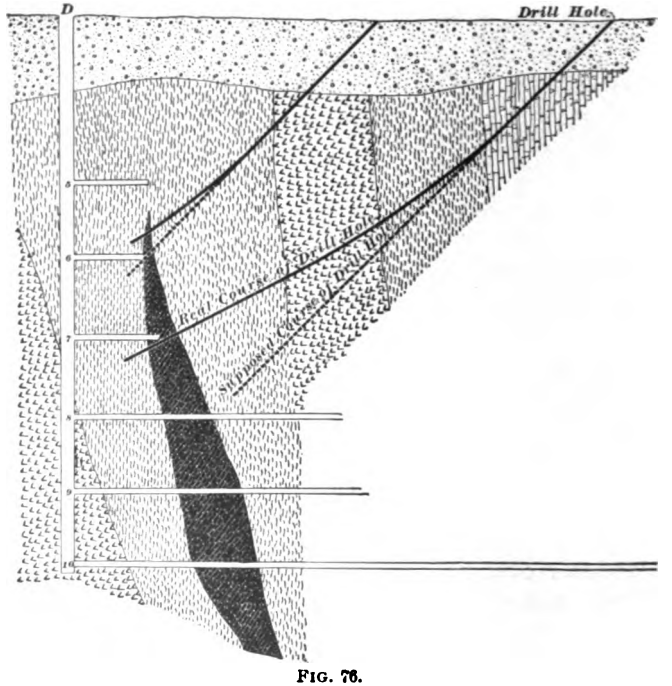

FIG. 76.

the shaft had been sunk and the drifts run out, the end of the hole was discovered 96 feet above and 70 feet south of its supposed location. The dotted line shows the supposed course of the drill hole, while the full line shows its real course.

115. Fig. 77 illustrates the course of a vertical hole drilled by the Hamilton Ore Co., and afterwards followed

down in the construction of their No. 1 shaft. *A* is the location of the hole on the surface, and *B* is the place where it disappeared 490 feet below the surface. The dotted lines

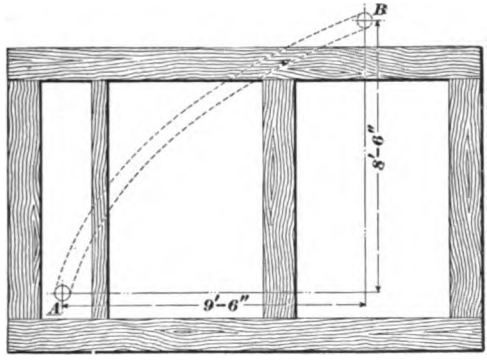

FIG. 77.

show the course of the hole for the 490 feet that it was followed.

116. The principles underlying this tendency to drift from the supposed course are very simple, and may be considered as follows:

Suppose, for example, that it was desired to drill a downwardly inclined hole through a hard and uniform rock, such as quartzite. The diamond bit is always of greater diameter than the rods which follow it. If this were not the case, and the bit were not kept absolutely to gauge, sooner or later the rods would stick in the hole. If the rods were the exact size of the hole, it would be necessary to cut grooves on the outside of them for their entire length, in order that the water which is forced down through the inside to cool the carbons and wash away the cuttings might be allowed to ascend on the outside. For these reasons, the drill-rods are always considerably smaller than the diameter of the bit. The core-barrel is sometimes made to fit the hole quite closely, being provided with spiral grooves on the outside, through which the water can ascend.

For simplicity, suppose that the hole had been drilled for a few feet perfectly straight, and with its end perpendicular

to the center line of the hole. Now, suppose that a full-sized bit with a very small core-barrel and rods were introduced to continue the work. They would assume some such position as that shown in Fig. 78; that is, the bit, being

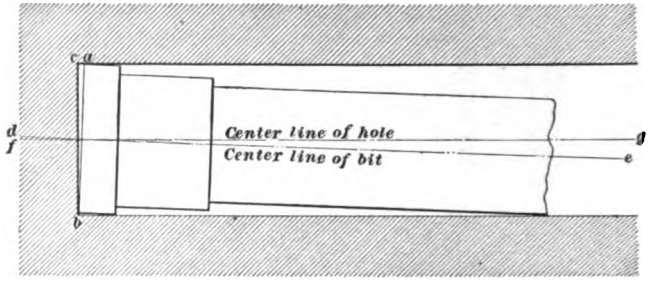

FIG. 78.

of the same diameter as the end of the hole, would of necessity occupy a position practically concentric with that of the hole, while the rods, owing to their flexibility, would sink down into contact with the lower side of the hole. This action would result in throwing the face of the bit into such a position that the plane of the end of the hole and the plane passing through the end of the bit would form an angle *a b c*. As the direction of the hole at any instant is perpendicular to the plane in which the diamonds rotate, it is evident that, with the rods in the position shown, the hole would have a tendency to progress along the line *d e* instead of along the line *f g*. In other words, the course of the hole would begin to rise, and as the drilling progressed, this tendency would continue and the course of the hole would be constantly ascending.

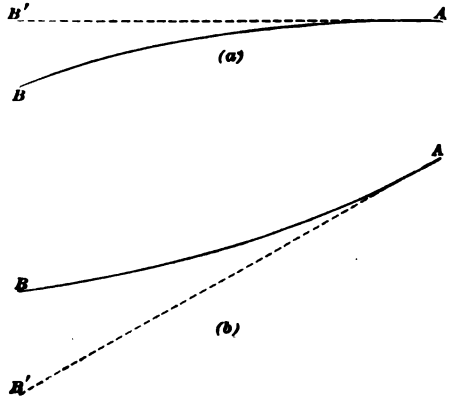

FIG. 79.

117. Fig. 79 is a sectional plan (*a*) and

elevation (*b*) of a diamond-drill hole illustrating this tendency to rise. The heavy lines *A B* show the actual course and the dotted ones *A B'* the proposed course.

118. The vertical rise is not the only tendency to drift caused by the rods being of smaller diameter than the bit. By referring to Fig. 80, it will be seen that if the drill-rods rotate in the direction of the hands of a watch, they will tend to roll to the right, into the position shown by the full lines. This would carry the point *A*, Fig. 81, over into the position shown. Now, it was seen that when the center of the rods at the point *A* dropped below the center of the hole, the course followed by the bit was an upward curve. In like manner this rolling action tends to carry the rods to the right, and the point of the hole would deflect to the left, as shown in Fig. 79 (*a*). In drilling through hard rock, great pressure has to be put upon the bit to make the diamonds cut, and this pressure increases the tendency to drift by springing the rods against the side of the hole. It has been claimed that at times the outside of the core-barrel may be forced into contact with the inside of the hole within 2 or 3 feet of the face of the bit, that is, when using small-sized bits not over 2 inches in diameter. Old or worn core-barrels are sometimes as much as $\frac{5}{16}$ of an inch smaller in diameter than the bit. Such a great difference in diameter causes the hole to curve very rapidly.

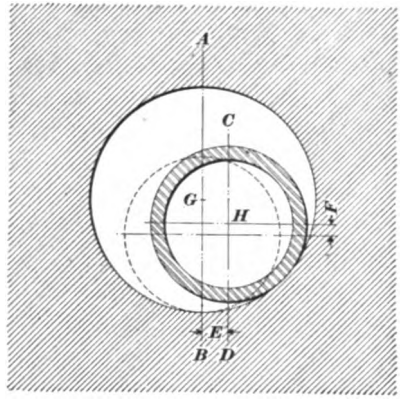

FIG. 80.

Reverting to Fig. 80, it will be seen that as the rods rolled to the right, through the distance *E*, their center was carried upwards through the distance *F*. This vertical rise

will tend to neutralize the angle caused by the point *A*, Fig. 81, coming into contact with the bottom of the hole. Hence, the horizontal drift partially neutralizes the rise.

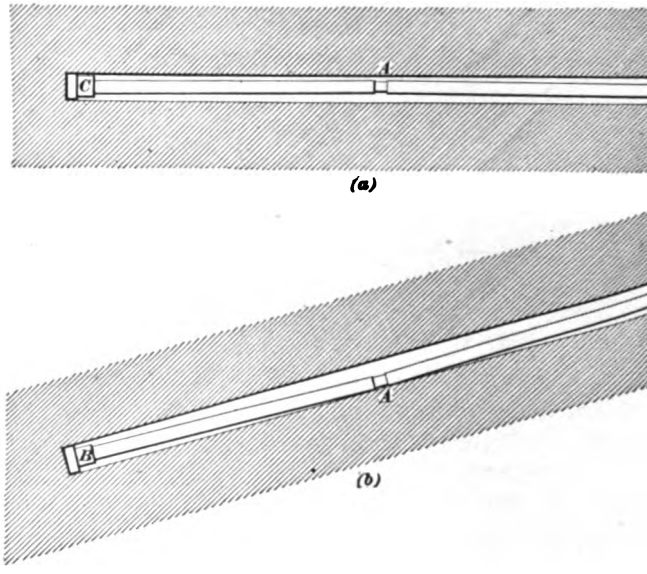

FIG. 81.

119. Unfortunately, all material drilled through is not hard and uniform in structure, many factors entering into the problem to complicate matters and carry the end of the diamond-drill hole from its supposed position. In drilling through soft material, the wear of the sides of the hole by the rods increases the tendency to drifting.

In some cases this drift in the diamond-drill hole may not be an altogether unmitigated evil, for if it were desired to make the end of the hole rise in order to reach a certain point in the formation, this may be accomplished by using a core-barrel very much smaller than the bit and by pushing the work as rapidly as possible. On the other hand, if it is desired to keep the holes straight, a core-barrel of practically the size of the bit may be used. It has also been proposed to use bushings set with diamonds and placed back

of the bit or core-barrel, thus keeping the center of the bit in line with the center of the hole.

At times, pockets, vugs, or open places are encountered in the formation, and frequently these are lined with very hard crystals. The bit coming against the face of one of these openings at an angle may be forced from its course. The hole may be at an angle to the strata passed through, and this will undoubtedly have an effect upon the drift, especially when the formation is composed of alternate layers of hard and soft material.

When drilling through soft material, the bit cuts very much faster and requires less pressure upon the rods. This reduces the tendency the rods have to spring against the side of the hole, and is one of the reasons why the bit has less tendency to rise less in drilling an inclined hole through soft material than when drilling through hard material. In drilling through soft material, such as hematite iron ore, the drill-rods are liable to wear large cavities along the course of the hole.

120. Surveying Diamond-Drill Holes.—Formerly it was the custom for the civil engineer in charge of the mine surveying to take the angle of the hole at its collar and plot this angle on his mine map, indicating the various strata passed through as occurring along this line and at their respective distances from the collar, as shown by the core. From what has already been said in regard to drifting, it is evident that these results were frequently very much at fault.

In 1880, Mr. G. Nolten, in Germany, proposed to fasten a small bottle partially filled with hydrofluoric acid into the core-barrel just above the bit, and to lower this to the bottom of the hole, leaving it in that position a sufficient length of time for the acid to eat a ring on the inside of the glass. Upon drawing the rods and the bottle from the hole, the surface of the liquid in the bottle could be made to coincide with the ring on the inside of the glass and this angle measured. By making such observations at frequent intervals

during boring, and plotting the results, a vertical projection of the hole can be obtained, as illustrated by (*b*), Fig. 79. But this gives no information as to the horizontal drift of the bit. One of these bottles which has been used and acted upon by the acid is shown in Fig. 82.

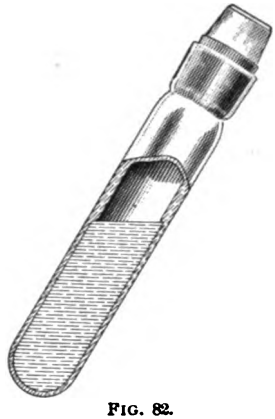

FIG. 82.

In case there is much water in the drill hole, it may be necessary to plug the upper end of the core-barrel with a piece of wood, in order to prevent the water in the rods above from forcing the bottle of hydrofluoric acid out of the bit while the rods are being drawn from the hole.

121. In 1883, Mr. E. F. MacGeorge, an Australian engineer, invented and used the following process: He filled small glass tubes with gelatine, in which were suspended glass plummets and magnetic needles. By heating the gelatine to 180° Fahrenheit, which rendered it liquid, inserting the tubes into the hole at various points and leaving them until the gelatine had solidified, he could, upon removing the tubes, compare the angles between the compass, the plummets, and the center of the rod. This information enabled the course of the hole to be plotted with fair accuracy. The method can be used where there is no magnetic attraction, but in the vicinity of some iron-ore deposits it would be of little or no use.

122. Fig. 83 represents a profile showing curvature of nine holes drilled and surveyed under the supervision of Mr. J. Parke Channing. In the case of hole number *1*, the core-barrel was fairly new; in number *2* a new core-barrel was introduced near the latter part of the work, and thus kept the end of the hole straight; number *3* was drilled before the core-barrel had worn much, and consequently it

has a fairly true course; numbers *4*, *5*, and *6* are more or less curved; in the case of number *7* it was desired to strike the formation at a certain point, and in order to accomplish this it was necessary to keep the hole from flattening if possible. This was attempted by using special couplings (made of steel and hardened), which were introduced between the rods and the core-barrel. They wore

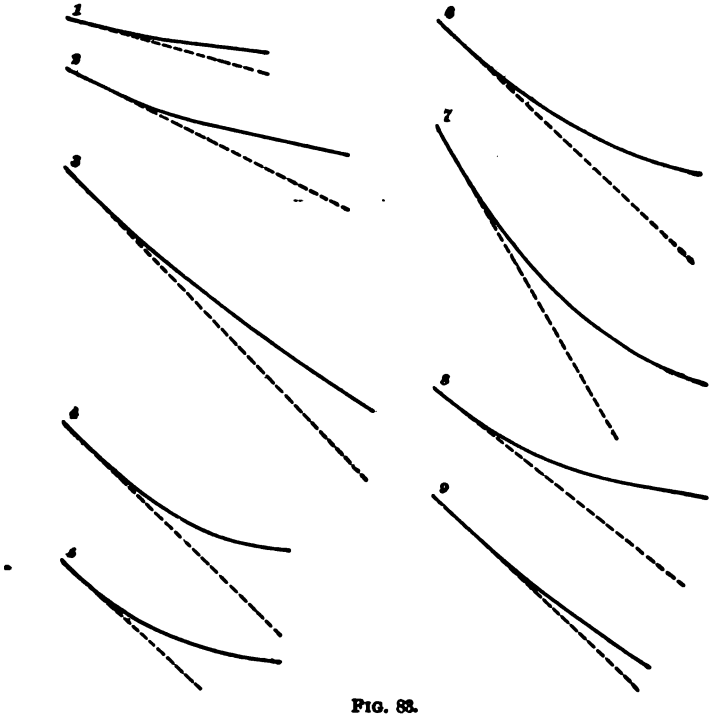

FIG. 88.

away quite rapidly, and the attempt does not seem to have been very successful. In the case of number *8*, it was desired to make the hole rise as much as possible, and this was accomplished by using an old, worn core-barrel and a large bit. Number *9* was kept practically straight by using a new core-barrel and a bit with but little clearance.

PRACTICAL NOTES ON DIAMOND DRILLING.

123. Diamond drilling is carried on either from the surface or from the workings of a mine. The systems used in the two cases differ but little, but for the sake of clearness, the surface drilling will be considered first.

DRILLING FROM THE SURFACE.

124. In this class of work, only perpendicular or downwardly inclined holes can be drilled, and in most cases a complete power plant is required for surface prospecting; that is, not only the diamond drill, but its engines, together with the necessary boiler, pumps, etc., are required. The power used may be furnished by steam, electricity, compressed air, horses, or even men, as in the case of hand drills. Fuel for the power plant must be provided in case a boiler is used, and water must be provided for the use of the drill and the boiler, if one is used.

A tripod or derrick is required to assist in handling the rods and for use while sinking the stand-pipe, and a shanty or shelter to protect the men and machinery.

125. The diamond drill is intended for the penetration of rock formations only, being but very poorly adapted for work in loose gravel or sand; hence it is necessary to sink a stand-pipe through the surface drift material and then operate the drill-rods through this pipe. In case the rock formation below the drift is soft, it may be necessary to use a casing.

126. Preparation Work Necessary for Surface Drilling.—Having selected the location of the required hole, arrangements must be made whereby an ample supply of water may be obtained for the use of the drill and the boiler. Next, the stand-pipe must be sunk to bed-rock. In the case of fine sand or very soft material, such as occurs in swamps, the stand-pipe may be driven to bed-rock without any trouble, or a jet of water may be introduced to flush out

the material as the pipe is driven down. In the majority of cases, the drift contains a greater or less number of boulders, which interfere with the sinking of the pipe.

Where such drift is shallow, not exceeding 15 feet, it may be best to excavate to bed-rock and carefully secure the stand-pipe, the excavation then being filled and the drill placed in position. If the drift material is thick, and especially when it contains large quantities of quicksand or water, which would render excavating very difficult, it is often necessary to drive the stand-pipe to a great depth and to remove numerous large boulders from its course. These boulders may be broken up by drilling into them and blasting, or a hole of sufficient size to allow the introduction of the stand-pipe may be drilled through a very large boulder. This drilling is usually accomplished with a percussive bit. The percussive bit may be fastened to the end of the ordinary diamond-drill rods, or to similar rods specially provided for this purpose and made somewhat heavier.

127. At times it is found more expeditious to use a rig similar to the regular American Well-Drilling Rig, with jars, etc., for sinking the stand-pipe.

It is not an uncommon occurrence to have the stand-pipe break while trying to force it through ground containing boulders, and then it is usually necessary to pull it up and begin again. The stand-pipe must be chopped into the rock so as to form a good joint. If this were not done, one of two things would occur: either the surface waters would wash sand and gravel into the drill hole, or the water used in drilling would pass out under the stand-pipe into the soil. The stand-pipe may be put down by means of a portable hoist before the drill comes onto the ground. In this way the drill can be kept at its regular work, for if used in sinking the stand-pipe, it really becomes nothing more or less than a portable hoist while doing the driving.

Special rigs and devices have been designed and are furnished with diamond drills, by means of which stand-pipes may be drilled down through ordinary drift material. These

consist of pod-bits, auger-bits, percussive bits, casing bits, etc. In many cases it is quicker to put the stand-pipe down with the rig provided with the drill than it would be to employ a special rig of any other type.

128. Drilling Pit.—Where it is desired to drill fan holes, that is, several downwardly inclined holes from the same point, it may be well to sink a small prospecting shaft or pit and locate the drilling-machine on the bed-rock.

129. The advantages of this method are:

1. No stand-pipes are required for the several holes.

2. Flatter holes can be drilled than would be the case were the drill placed on the surface. This applies to cases where the drift material is quite 20 feet thick or more.

3. There is no delay between the drilling of the successive holes; that is, after one hole is drilled there is no delay waiting for the next stand-pipe to be driven.

130. The disadvantages are:

1. Even if the shaft or pit were dry, a pump will be required to remove the water from the pit, because the drill water is present if the pit itself is dry.

2. When operating at the bottom of a pit, there is not sufficient space for the quick and economical handling of the drill-rods.

3. If the drill is driven by steam, the boiler will of necessity be placed on the surface, which necessitates the carrying of the steam a long distance before it is used in the engines.

131. Drilling.—After the stand-pipe is put down, drilling is commenced and continued night and day until the work is finished. During the sinking of the stand-pipe, the entire force of drill men work together, in the day shift only. After drilling commences, the work is carried on in two shifts of twelve hours each. If the hole is comparatively shallow, not over 700 feet, and the formation not extra hard, four men comprise the drilling crew, the head driller acting as foreman during the daytime and setting

bits while the machine is running. He has an assistant who acts as fireman. At night the assistant foreman runs the drill with the aid of his fireman.

While changing the rods, one of the men goes on top of the shanty, or up into the derrick, the other remaining at the collar of the hole, the rods being handled by means of a small drum connected with the drill.

In case the hole is deep or the material very difficult to drill through, five men comprise the drilling crew, there being two foremen, two firemen, and a chief driller. In this case the chief driller sets the bits and has general oversight of the work. One of the foremen and his fireman operate the drill at night, and the other two during the daytime.

Many large mining companies who have a number of drills in operation all the time keep a man employed to set the bits for all the drills, in which case each drilling crew is comprised of four men.

132. Casing.—The stand-pipe is usually made considerably larger than the drill-rods, so that if it is desired to use a casing in the hole, it can be put down through the inside of the stand-pipe without interfering with the latter, and in many cases after the stand-pipe has been put down to bed-rock a casing is drilled into the rock to make a water-tight joint. The advantage of this method is that the drill-rods fit the casing more closely than they would the stand-pipe, and hence the hole will be started more accurately; that is, the tendency to drift on the start would be reduced.

After the hole has passed through a portion of the rock, it may encounter loose material, such as quicksand, gravel, or broken rock. To keep such material out of the hole while the work is in progress requires that the casing be continued through the troublesome formation. To accomplish this, any casing already in the hole is usually pulled up and a reamer introduced, which enlarges the hole down to and through the bad ground. The casing is then introduced and keeps the hole free from the troublesome material,

while the work proceeds as before. In some cases, in order to avoid reaming, a smaller casing is introduced inside of the diamond-drill hole, the work from this point on being continued with a smaller bit than that with which the first portion of the hole was drilled. At other times expanding bits are used to cut the rock away from underneath the casing, and thus allow it to follow the bit down. These expanding bits, when used for reaming, produce no core.

133. Guides for the Driller.—The guides by which the driller judges the progress of the work and the condition of the bottom of the hole are as follows:

1. Changes in speed of the machine.
2. Changes in the flow of the wash water.
3. Differences in pressure, as shown by the pressure-gauge attached to the feed mechanism or thrust indicator.

134. Changes in the Speed of the Machine.—In case the machine increases in speed, it is a sign that one of two things has occurred: either the bit has cut into a softer formation, thus reducing the work and allowing the machine to speed up, or the drill-rods have twisted off, removing the work of turning the bit. In case the latter has occurred, the flow of wash water will be very much increased, and the pump will have a tendency to race.

In case the machine slows down, the drill has either cut into a harder formation, thus throwing more work upon the bit and the engines, or the core has blocked or wedged in the core-barrel and is being ground to powder, in place of feeding up into the barrel as it should. The driller's experience will usually tell him which of the above has occurred. In case the core has wedged in the core-barrel, it may cut off the flow of the wash water, thus causing the pump to labor. At times this wedging or blocking of the core may free itself in a few moments and the work continue as usual, while in other cases it is necessary to pull up at once and inspect the condition of the bit and core-barrel. If the driller's experience has shown him that the bit should drill

a certain distance in ordinary formation before it becomes dull, and this slowing down comes after it has drilled but a small fraction of that distance, it is very good evidence that the core-barrel has become blocked.

135. Lost Water.—When the diamond-drill hole passes through loose and broken formations, the wash water may escape into the rock, in place of returning to the surface. This is not a desirable state of affairs, as it deprives the driller of one of his guides as to the action of the bit. Many devices have been resorted to to force the water to come to the surface, such as sending down bran, sawdust, cement, etc., in the hope that they would wash into the openings in the rock and close them, thus forcing the water to come to the surface. Casing the hole through the troublesome formation will bring the water to the surface.

136. Side Friction.—At times, gravel, sand, or bits of rock from the formation passed through get into the hole and block the rods. If, upon lowering the rods into the hole while they are still suspended (that is, with the bit off the bottom), they rotate with difficulty and in a jerky manner, it is evident that such obstructions are present, and they must be removed either by casing the hole through the troublesome formation or by flushing out the portion then in the hole and seeing if any more accumulate. At times this side friction is caused by the sliding of loose or shaly rock against the rods, and under such circumstances the hole will require casing.

137. Washings.—The washings brought up by the water are not all derived from the cuttings of the bit, but while passing through soft formations the rods always wear more or less material from the sides of the hole. Any change in the character of the wash must be noted by the driller, as these changes indicate changes in the rock formation that the drill is passing through.

Sometimes tests are made to see how long it takes the water to pass down the rods and return as wash. This may be

accomplished by passing foreign substances, such as drops of candle-grease or coloring matter, through the water.

When drilling through iron ore or similar substances, the wash material is collected in boxes provided for the purpose and analyzed from time to time to see how it compares with the analysis made from the core.

138. When drilling through hematite or limonite, if it is desired to make a determination for iron from the diamond-drill core or from the material brought up by the wash, it is necessary to first remove all the iron worn from the bit and the rods during the process of drilling. This may be accomplished by the aid of a magnet. If this precaution is not taken, the analysis of a diamond-drill core may show more iron than any known iron ore could possibly contain.

It has been stated that the analysis of the wash from the Lake Superior hematite drillings is usually higher in iron and lower in phosphorus than the ore actually passed through, the presumption being that the light quartzite in the ore has been washed away as tailings from the settling boxes, together with a portion of the phosphorus.

In diamond drilling for precious metals, it is of great importance to catch the sludge or wash, as by this means the presence of valuable material which has been ground up in the core and washed out may be discovered.

139. Parting of the Rods.—The parting of the drill-rods may occur from several causes, among which may be mentioned :

1. The breaking or twisting off of the rods themselves.
2. The stripping of the thread in a coupling, either while the drill is in operation or during the raising or lowering of the rods.
3. The unscrewing of a coupling. This usually occurs while the rods are being raised or lowered.
4. The giving way or breaking of the safety jack which holds the rods at the surface during the process of raising or lowering, at such times as the hoist gear is uncoupled from them.

140. If the rods drop when they part, the diamonds are liable to be broken, or smashed, as the driller usually expresses it.

The lower portion of the diamond-drill hole usually contains more or less mud, and if lost rods are allowed to remain standing in this mud, it frequently sets like a cement, thus rendering it almost impossible to recover the embedded rods.

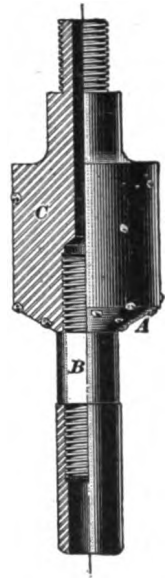

FIG. 84.

141. Fig. 84 illustrates a reaming bit. It has a bevel face *A*, on which the diamonds are set. A few stones are also set around the periphery of the portion *C*, in order to maintain the diameter of the portion of the hole being reamed. A coupling which screws into the lower end of the bit is shown at *B*, and onto this one length of drill-rods is screwed. The drill-rods act as a guide and keep the reaming bit in line with the hole previously bored. The reason that the guide is not made in one piece with the reaming bit is that the drill-rod used as a guide wears more or less, and hence requires renewing before the bit has to be removed, and by the method shown any drill-rod will renew the worn one. The upper end of the bit is so formed as to screw into the drill-rods above in place of the coupling.

142. Figs. 85 and 86 illustrate two styles of fishing taps. In Fig. 85 the thread on the tap is tapered throughout its entire length and the flutes extend to the shoulder. The hole through which the water passes extends straight down to the point of the tap. The end of the tap has teeth cut in it like a rose-bit. This tap is very useful where the weight of the parts to be removed are not too great, but being tapered throughout its entire length it has a tendency to spread the piece into which it is screwed and hence to pull out rather than to lift the lost rods.

Fig. 86 illustrates a tap constructed on a slightly different principle. In this case the point of the tap is formed like a drill and point reamer, and is intended for cutting its way into or through the jammed end of the rods. The hole for the water stops an inch or so from the tap, and from this point small holes are drilled from the flutes or between the teeth at the end of the tap into the main supply passage. Thus the water or other lubricant used during the fishing is furnished to the cutting edges as required. The portion *B* of the tap is tapered, while the portion *A* is straight. The result is that when a tap is secured nearly up to the shoulder it will form threads on the rods for a distance equal to the straight portion *A*, and hence the tap is not as liable to pull out as if it were tapered throughout its entire length.

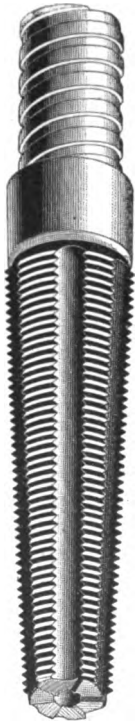

FIG. 85.

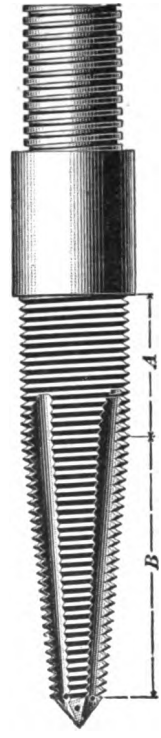

FIG. 86.

When fishing for rods, the fishing-tackle is best adapted for screwing into a coupling, on account of the fact that the metal of the coupling is thicker than the metal of the tubes, and while the tap might screw a sufficiently firm hold in the coupling, it would be liable to pull out from the tubes. On this account it is sometimes necessary to send down special tools and cut off all the tube above the upper coupling, and then screw the tap into this coupling and draw out the lost rods. At times fishing dies are used, which are screwed over the outside of a coupling, thus enabling it to be drawn from the hole.

143. Figs. 87, 88, 89, and 90 illustrate a method sometimes employed to recover a lost bit. It will be seen that

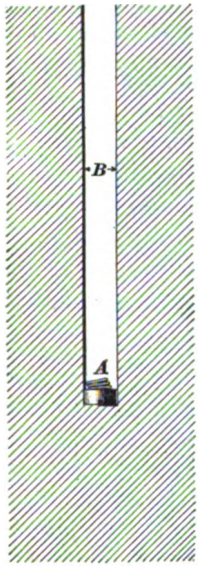

FIG. 87.

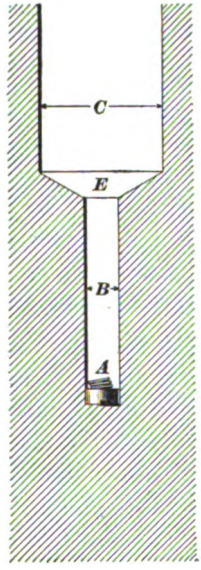

FIG. 88.

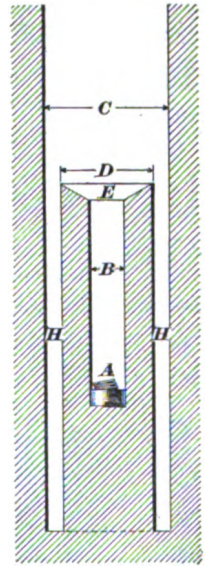

FIG. 89.

the upper end of the bit A has become so jammed to one side that it is impossible for a fishing tap to catch hold of it. In such a case as this, it would be necessary either to abandon the hole or to drill down around the bit. Fig. 87 shows the original hole of the diameter B with the bit A at its bottom. Fig. 88 shows the hole after it had been reamed to the size C down to the point E. After the hole has been reamed to the point E, a casing bit is introduced and the annular space $H\ H$ shown in Fig. 89 drilled down about the old hole. The core shown in Fig. 90 is then drawn up in the ordinary manner. It will be seen that this core contains the lower end of the old hole, with the lost bit at the bottom.

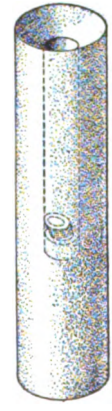

FIG. 90.

After the lost bit has been recovered, the hole can be

continued, though it will be necessary to use a larger bit or to start a small bit by using some device to keep the rods central in the hole. If this precaution is not taken, the hole may run out rapidly from this point.

144. If the rods have simply become unscrewed, it may be possible, by a little careful work, to screw them together once more and draw them out without the use of any special tools. In cases where the rods have become broken or a thread has been stripped, it will be necessary to use one of the special tools or devices known as fishing taps, fishing dies, etc. These are screwed into or over the end of the lost rods or core-barrel, after which they may be drawn out.

145. Sometimes lost rods may be recovered by using a block of dry, hard wood in place of a fishing tap. The wood *A*, Fig. 91, is screwed into the end of a rod *B*. The rod is then lowered down the hole and the wood driven into the upper end of the lost rods, as shown in Fig. 92. After the wood *B* has been driven into the rod *C*, water is poured down through the rod *A* and the plug allowed to swell. By this means the two rods are firmly united and may be drawn out together. This method is very useful in recovering core-barrels, bits, or short pieces of rods. It has the advantage that no turning of the rod *A* is necessary in making the coupling, for it is sometimes the case that the bit or core-barrel may rotate with the fishing tap, thus rendering it impossible for the tap to obtain a sufficient hold on the lost piece to bring it out.

FIG. 91.

FIG. 92.

At times a diamond-drill hole contains so much water that the plug would become swelled long before it could be

driven into the lost rods. In such a case, the portion of the wood projecting from the rod can be given a coat of paint. After the wood has been driven into the rod and painted, water is poured into the rod. This acts upon the unpainted end grain of the wood as exposed in the tube, and the block will swell and connect the rods as desired.

When the lost rods become firmly wedged in the hole, it may be necessary to unscrew them by means of a left-hand fishing tap. When left-hand taps are used, it will be necessary to pin all the joints of the rods used to operate them, unless these rods are also provided with left-hand threads.

146. Lost Diamonds.—It frequently happens that diamonds become wrenched from their setting and remain in the hole after the rods are withdrawn. It would be unsafe to continue drilling until these lost stones were removed from the hole, for they would probably wrench other diamonds from the bit and cause a great amount of damage; hence the bottom of the hole must be cleaned out and the diamonds recovered by means of a mass of soap or wax fastened into the end of the rods, which are then let down the hole. The diamonds, together with any other small pieces of rock on the bottom, adhere to this mass and can be drawn out. At times there is a stump core left in the hole, and consequently the above method becomes impracticable. In such a case it may be necessary to use a percussive bit and chop up the stump of the core and the diamonds, after which they are washed out by a current of water, or they may be recovered, as before stated, by means of soap or wax.

147. Method of Setting the Diamonds in the Bit.—The tools used in setting diamonds are small chisels and small punches, and the diamond-setter's kit consists of from 8 to 12 of these tools, together with a light hammer and one or two small drills. The smallest chisels are not over $\frac{1}{16}$ of an inch in width on the cutting edge, and the largest flat chisel is rarely over $\frac{3}{8}$ of an inch in width on the cutting edge.

The material of which the bit blanks are made is a soft steel, which can be calked around the diamonds so as to form a perfect setting.

The setter first examines the diamonds and determines the best cutting edge and position for each individual carbon. The size and character of the stone also largely determines the number required in a bit. After having decided upon the number of stones, he takes a center-punch and marks the locations in which he intends to place the various stones. Holes are then drilled in the location where it is intended to set the carbons. These holes are enlarged with the chisels and their lower portion shaped so that they will receive the stone and form a good bed for it. Pieces of copper are sometimes forced under or behind the carbons as a bed against which to calk them, but the best settings are made when the steel itself is carefully formed for the bed. After the stone is in place, the steel surrounding the hole is calked down against the stone so as to make a perfect setting, and usually one or two grooves are filed across the face on the bit in order to provide passages for the water.

Each stone should have a good bearing, and be so set that it is not liable to be torn out of the bit by any sudden jerk which it may receive from a loose piece of rock. Great care should be taken to see that one or two stones do not have to do the greater part of the work. It is better to have each stone cut only a certain portion of the face or side of the hole, for if the stone is so set that it has to cut on two faces, there is great danger that it may be wrenched from its setting. It is a good plan to set one or two stones on the sides of the bit as clearance stones, and in case the diameter of the bit becomes somewhat reduced, without materially reducing the cutting ability of the face carbons, it is possible to reset these clearance stones and so save the entire resetting of the bit. Clearance stones are usually smaller carbons than those used in the face of the bit. Sometimes carbons are set in a special bushing placed above the core-lifter, so as to slightly enlarge the hole and to form an

additional guide for the bit. The setting of carbons in reaming bits or solid bits is accomplished in a manner similar to that just described.

148. Records.—In diamond drilling it is very important that accurate records concerning the drilling be kept. In average drill work it is difficult to obtain a core the total length of which will be more than 90 per cent. of the distance drilled. At the same time there ought to be no trouble in determining the thickness of any seam to within a fraction of an inch, providing the seam does not exceed a thickness of 5 feet. The drill runner should always keep a rule at hand, and at every change in the drilling which would indicate the passage of the bit from harder to softer material, or vice versa, he should make a measurement and note the depth in his note-book; these measurements are to be compared with the core.

The chief driller should keep a very careful note-book or log, recording in it all these measurements and points of interest in regard to the core. The supposed or known drift of the drill hole should be recorded by the engineer in charge of the surveying. The core should be saved and arranged in its proper order. For this purpose, boxes or trays, provided with parallel grooves to receive the core, should be provided. These grooves may be made by simply nailing thin strips of wood in the bottom of the boxes or trays in such a manner as to form narrow divisions for the reception of the core.

When passing through thick formations of barren material, it is not necessary to save all of the core, only samples from time to time being put into the collection. The depth at which the core was obtained should be recorded by labels upon the core itself and by blocks inserted in the boxes occasionally on which the depths have been recorded.

149. Accuracy Against Speed.—In the case of shallow holes drilled to determine the thickness of a known formation, such as a deposit of iron ore, salt, or gypsum, it may be policy to push the work rapidly, as small discrepancies,

caused either by drift or by the loss of portions of the core, are not of much importance, but in the case of deep holes or when drilling for more valuable material, it is of the greatest importance that the record give an accurate account of the formation passed through; for this reason, it may be necessary to spend a great deal of time on the drilling.

When the drill runner sees by his pressure-gauge or by the behavior of the machine that he has cut into a formation either harder or softer, it may be best to pull up the rods at once and investigate the condition of both the core and bit before proceeding into a new formation. This is of especial importance when prospecting for the precious metals.

It is of great importance that the bit be resting on the bottom of the hole when drilling is commenced, for if this is not the case, either time will be wasted while the machine is feeding the rods forwards to reach the bottom of the hole or the rods may be dropped and the diamonds smashed. It is also important that the bit be carefully brought to the bottom of the hole, for if it were dropped there would be great danger of smashing the diamonds.

When drilling deep holes, that is, holes over 700 feet, it is necessary that every portion of the apparatus be in perfect repair, and that the men in charge of the work use their utmost skill and caution in each operation. If the men are not extremely careful, they are liable to cause accidents, which would retard the work, if not causing the loss of the hole. No one without considerable experience should attempt to drill a deep hole with a diamond drill.

There is no class of work in which the old adage, "The more hurry the less speed," applies more fully than to diamond drilling, for when the men get in a hurry they are liable to drop rods, lose diamonds, let the hole run out of true, and do a number of similar things, all of which will result in a greater or less delay in the work.

150. Size of the Hole.—As a general rule, it is best to use the smallest bit that can be conveniently handled, for a small bit means less cutting, less expense for diamonds,

and greater speed in the work. For holes from 500 to 600 feet deep, bits of from $1\frac{5}{8}$ inches to $1\frac{1}{2}$ inches outside diameter are used. These will take out a core of from $1\frac{5}{8}$ inch to 1 inch diameter. When prospecting for precious metals or for mineral which occurs disseminated through the rock formation (as some zinc and lead deposits), it is best to use a somewhat larger bit. This is also the case in prospecting for coal, where a small core would break off and grind up, on account of its not being strong enough to resist the action of the bit cutting about it.

151. The Influence of the Angle of the Hole.—Vertical holes give very much less trouble than those which are started at an angle; for in the case of a vertical hole, the rods do not lie upon the bottom of the hole, and hence the drilling-machine does not have to overcome this great friction in addition to the work of driving the bit. It is much easier to keep a vertical hole straight than a horizontal or an inclined hole, for the wear upon the core-barrel and rods is very much less, and, as a consequence, it is easier to guide the bit than in the case of an inclined hole, for the rods immediately back of the bit can more easily be kept the full size. It is much easier to handle and change the rods in the case of a vertical hole than when drilling at an angle.

152. Drilling from Underground with a Diamond Drill.—A diamond drill is frequently used for drilling from the workings of a mine. This is commonly called underground diamond drilling to distinguish it from drilling done from the surface, which is called surface drilling. In the case of underground drilling, the following points may be noted:

1. Not only vertical and downwardly inclined holes can be drilled, but horizontal and upwardly inclined holes are also drilled.

2. The drill is rarely driven by steam, compressed air or electricity being used.

3. The water used for drilling purposes is often furnished

from the water column of the mine, thus doing away with the necessity of a pump.

4. No derrick is required to hoist the drill-rods, the tackle being simply attached to the mine timbers or the roof.

5. No shanty or shelter is required for the men and the machinery.

6. No stand-pipe is required, as there is no drift material to be passed through. At times, underground holes require casing.

7. When drilling holes from the deep levels of a mine, it is not uncommon to encounter water under great pressure. Sometimes this water will force the drill-rods from the hole and the machinery itself may require bracing. Under such circumstances the rods come out of themselves in place of being hoisted out, but they have to be forced in by means of jack-screws or with the aid of the hoisting rope.

8. Aside from the points already noted, underground drilling does not differ materially from surface drilling.

153. Rate of Drilling.—The rate of drilling varies greatly, depending upon the depth of the hole, the character of the rock, and the size and power of the drill being used. Hand drills usually average between 10 and 30 feet per shift of 10 hours, including the time occupied in taking up rods, changing core-barrels, etc., but not counting the time required to move the machine. It is rare that small drills used for prospecting to a depth of 700 feet about mines succeed in drilling more than an average of 8 feet per shift throughout the year, and yet some phenomenal records have been made for a short time—such, for instance, as the taking out of over 60 feet of core in 24 hours, or the boring at the rate of 30 to 40 feet an hour for a short time in comparatively soft material. This rapid boring is not always advisable, for reasons already stated.

154. Cost of Drilling.—Several tables are here given to show the cost of drilling with a diamond drill in various formations, and it will be seen that these costs vary from less than one dollar to over five dollars per foot.

RECORDS OF COST PER FOOT IN DIAMOND DRILLING.

	A	B	C	D	E	F	G	H	I	J	K	L	M	N	O
Labor.....	.707	1.040	2.483	1.150	.581	1.615	1.030	1.720	1.189	1.284	.721	1.200	.939	.812	.984
Fuel.....	.094	.270	.256	.019	.000	.216	.090	.214	.157	.339	.419	.329	.126	.182	.251
Camp acct.....	.373	.559	.789	.538	.295	.621	.384	.549	.516	.495	.519	.595	.644	.722	.636
Repairs.....	.139	.110	.294	.171	.135	.144	.103	.185	.154	.165	.040	.087	.138	.126	.116
Supplies.....	.034	.065	.039	.074	.023	.032	.011	.039	.048	.097	.020	.092	.076	.097	.088
Carbon.....	.263	.658	.859	.860	.843	1.587	.934	.684	.684	.733	.227	.209	.553	.239	.330
Supt.....	.239	.322	.628	.040	.063	.192	.140	.305	.259	.172	.347	.220	.106	.196	.199
Total.....	1.849	3.024	5.348	2.852	1.940	4.407	2.692	3.696	3.007	3.285	2.293	2.732	2.582	2.374	2.604

A 5 holes, 1,066 ft.
Sandstone and marble.

B 1 hole, 1,293 ft.
Black slate and jasper.

C 3 holes, 478 ft.
Jasper, very hard.

D 5 holes, 780 ft.
Jasper, hard.

E 1 hole, 216 ft.
Iron slates.

F 1 hole, 174 ft.
Jasper and slate.

G 2 holes, 267 ft.
Jasper and slate.

H 3 holes, 410 ft.
Jasper.

I Average cost of total work of drilling 21 holes. Total of 4,684 ft.

J 2 holes, 634 ft.
Iron slates.

K 2 holes, 360 ft.
Schist and jasper.

L 6 holes, 1,350 ft.
Iron slates.

M 2 holes, 611 ft.
Schist, jasper, and quartzite.

N 6 holes, 2,091 ft.
Quartzite.

O Average cost of drilling 18 holes, 5,046 ft.

155. The cost of drilling 2,084 feet of hole in prospecting the ground through which the Croton Aqueduct Tunnel was to pass is given as follows:

814 ft. of soft rock (decomposed gneiss), in which an average of 23.1 ft. per day was drilled, at a cost of $1.15 per ft.

347 ft. of hard rock (gneiss), in which an average of 11.1 ft. per day was drilled, at a cost of $3.97 per ft.

923 ft. of clay, gravel, and boulders, in which from 6½ to 9 ft. per day were drilled, at a cost of $4.07 per ft.

The average progress per day in drilling the entire 2,084 ft. was 10.2 ft. per day.

156. In the Minnesota Iron Co.'s mines at Soudan, Minnesota, the diamond drill is used for drilling holes from 10 to 40 feet in depth in the back of the stopes, practically all the work being done in iron ore. The average cost per foot of drilling 13,512 feet of hole was $.7703, which was divided as follows:

Carbons	$.3400
Supplies, oil, etc.	.0700
Fuel	.0400
Repairs	.0500
Labor	.2703
Total	$.7703

157. The following tables give the cost of boring at two Michigan mines:

TABLE I.

ISHPEMING, MICHIGAN.

				Total cost.	Cost per ft.
Labor	400¼ days	setter at $3.00	$1200.75	$2,506.10	$.669
	372 "	runner " 2.25	837.00		
	230½ "	" " 2.00	460.50		
	4½ "	laborer " 1.75	7.85		
Carbon, 68⅜ carats, at $15.144				$1,035.47	.276
Bits, lifters, shells, barrels, and repairs				433.81	.115
Oil, candles, waste, and supplies				128.09	.035
Estimated cost compressed air				374.60	.100
Total				$4,478.07	$1.195

Number holes drilled	28
Drilled in hematite	193 feet.
" " jasper	646 "
" " mixed ore	986 "
" " dioritic schist	1,921 "
Total drilling	3,746 feet.
No. of 10-hour shifts drill was running, including moving and setting up	603
Amount drilling per 10-hour shift	6.2 feet.

TABLE II.

Underground drilling	6,075 feet.
Surface drilling	1,414 "
Stand-pipe sunk	470 "
Total distance run	7,959 feet.
Actual drilling time underground	672 shifts.
" " " on surface	165 "
Time of foreman, setter, moving, and stand-piping	1,314 "
Total time worked	2,151 shifts.
Av. progress per man per shift	3.70 feet.
" " " drill " " actually running	8.95 "
Weight of carbon consumed	111 carats.
Dist. drilled per carat of carbon consumed	67.38 feet.

	Amount.	Per foot.
Cost of carbon	$1,887.00	$.237
" " supplies and oils	134.13	.017
" " fuel	360.73	.045
" " shop material, etc	663.36	.083
Pay roll	4,000.03	.502
Total cost	$7,045.25	$.884

SPECIAL METHODS AND DEVICES FOR DIAMOND DRILLING IN SOFT OR SOLUBLE MATERIALS.

158. This may be divided into two parts:

1. Methods using the ordinary drilling outfit.
2. Methods requiring special tools or fixtures.

METHODS USING THE ORDINARY DRILLING OUTFIT.

159. This may be treated under two heads:

1. Methods adapted to soluble materials.
2. Methods adapted to soft materials.

160. Methods Adapted to Soluble Materials.—When drilling through soluble materials, such as salt formations, with a diamond drill, the core would be entirely or partially dissolved by the wash water if the ordinary methods were followed. This solution of the core may be partially or entirely prevented by using a saturated solution of the material through which the drill is passing, in place of pure water for a drilling solution.

161. Methods Adapted to Soft Materials.—Some ores are so soft that it would be impossible to obtain a complete core while using wash water, as the soft portions would be ground up and washed away, leaving only the harder material in the core-barrel. The soft portions are often the most valuable part of the ore, and hence it becomes necessary to obtain samples for analysis. This may be accomplished by running the drill dry, continuing the work until the bit blocks or shows signs of blocking, when the rods are immediately drawn together with the plug or core of ore which has forced its way into the core-barrel. It is sometimes necessary to plug the upper end of the core-barrel with a piece of wood to keep the water which accumulates in the rods from forcing the plug or core of ore out of the core-barrel and bit while the rods are being drawn from the hole.

When the drill runner encounters a body of soft ore, such as hematite iron ore, this method of drilling may be continued while passing through the ore-body, or part of the distance may be drilled in the ordinary manner, depending on any fragments of core that may remain in the core-barrel, the wash, and the behavior of the drill to indicate the character of the deposit passed through. It is only the soft ores of iron that give this trouble in drilling, for the hard hematites and magnetites furnish good cores. By this method of dry drilling, sample cores may be obtained from any soft material which partakes of the nature of clay.

METHODS REQUIRING SPECIAL TOOLS OR FIXTURES.

162. As this class of work is usually done by experts who take contracts for prospecting and who use special devices, which in most cases are patented, only a general description need be given.

The diamond bit can be depended upon to bore through any material, no matter how hard or soft, and for this reason it has been found to furnish a most perfect core.

The cores of soft materials, such as bituminous coal, sulphur, etc., would break up and be washed away if the water passed down through the core-barrel in contact with the core; also, owing to the soft nature of the material, the ordinary styles of core-lifters can not be used. To overcome these difficulties special core-barrels have been invented, which protect the core from the flow of the wash water.

163. There are two general styles of special core-barrels:

1. Those which rotate with the drill-rods and are in reality only double core-barrels, the wash water passing down through an annular space between the core-barrel proper and the outer tube which drives the bit.

2. Non-rotating internal core-barrels. These may be attached to a separate set of rods passing through the center of the drill-rods proper, but not rotating with them. When

this style of core-barrel is used, the core simply feeds up into the core-barrel as the bit does the cutting.

164. Non-rotating internal core-barrels may be so constructed that it is necessary to draw the entire set of rods to obtain the core, or they may be so arranged that the core-barrel can be drawn separately, through the center of the drill-rods, without disturbing the bit.

Rotating internal core-barrels may be so arranged that they can be drawn from the inside of the rods without disturbing the bit, but when so arranged they are generally drawn by means of a wire rope and a go-devil.

165. Special Core-Lifters. — Special core-barrels may be provided either with the standard core-lifters or with specially designed core-lifters.

166. Special core-lifters may be divided into two classes:

1. Those which depend upon the mechanical action of hoisting the rods or core-barrel to close the core-lifter upon the core.

2. Those in which the core-lifter is closed by means of water pressure or some device aside from the act of hoisting the core-barrel. The advantage of this style of core-lifter is that it can be made to grip the core before the bit or core-barrel is disturbed by hoisting, and so insure the securing of the entire core down to a point very close to the bottom of the hole.

167. In drilling through soluble material with a special or double core-barrel, it may be necessary to use a solution of the material being passed through, even though the wash water does not come in contact with the core in the core-barrel; for if ordinary wash water were allowed to flow up through the drill hole it would dissolve material from the sides of the hole, which might in time cause a great deal of trouble in case it should be necessary to fish for any lost rods. Then again, this increase in the size of the hole will probably increase the tendency to drift.

168. Other Special Devices for Obtaining Samples From Soft Material.—Under this head may be considered such tools as pod-bits, trap-bits, and auger-bits. These are all special forms of boring tools which can be attached in place of the ordinary diamond bit, and which are used in obtaining samples of any soft material at the bottom of a diamond-drill hole. The trap-bit may be of the auger-bit or pod-bit type, but it is provided with a trap-door at the lower end through which the excavated material can pass while the bit is in action. The moment the bit ceases to be fed forwards, the trap-door closes and secures any material then in the bit. These bits are necessary where water would wash the sample obtained by boring with any other style of bit.

A FEW SPECIAL ADVANTAGES POSSESSED BY THE DIAMOND DRILL.

169. Diamond drilling is not interfered with by water in the formation, while if the prospecting is carried on by shaft-sinking, the removal of the water may become an extremely expensive item, if not rendering it impossible to proceed with the sinking.

A given formation can be penetrated much quicker with a diamond drill than by sinking a shaft.

The cost per foot is much less in the case of drilling than in the case of shaft-sinking; hence, with a given amount of money, more strata can be penetrated with a diamond drill than by the sinking of a shaft.

When a prospecting shaft is abandoned for a short time, it fills with water, which has to be removed before the sinking can be continued, while if a diamond-drill hole is left idle and the stand-pipe or casing undisturbed, there is no expense for removing the water from the hole before drilling can be resumed.

If work in a prospecting shaft is stopped for a holiday or over Sunday, there is always a stand-by loss for pumping,

which is avoided in the case of a diamond-drill hole on account of the fact that water in the hole does not interfere with the drilling.

THE DAVIS CALYX DRILL.

170. In many respects the Davis calyx drill resembles the diamond drill. It requires drive tubes through which a current of water is kept flowing and has a bit which cuts out an annular space, leaving a core. There is an essential difference between these drills with regard to the cutting action of the bits, for the diamond bit cuts gradually and turns with a constant speed, while the Davis calyx bit may actually stop for a time and then turn with great rapidity.

171. Fig. 93 shows the bit of a Davis calyx drill. It is simply a steel tube having teeth on one end and a thread on the other by which it is connected to the drive tubes. The rear of each tooth is beveled to an angle of about 60 degrees to the horizontal, and the front is nearly vertical. In order to provide a clearance for the calyx tube and a passage for the water on either side of it, the teeth are alternately set in and out just in the same manner that the teeth on a rip-saw are set. The cylinder from which the bit is made is of the best steel and is about $\frac{3}{16}$ of an inch thick and 10 or 12 inches long, so that it will have sufficient material to stand repeated sharpening.

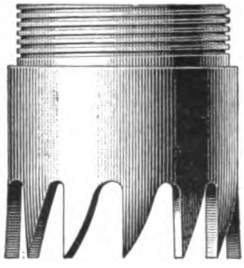

FIG. 93.

172. The action of the calyx bit is peculiar and strikingly effective. The teeth, being weighted down with the bore tubes, take a comparatively deep hold on the bottom of the hole, which prevents the bit from being turned until the torsional stress in the tubes is sufficient to overcome the resistance of the rock and start the bit rotating. When this takes place, the bit turns with lightning rapidity until

the potential energy stored up in the rods or tubes has been expended, when it stops and takes another deep hold on the bottom of the hole. Large pieces are in the meantime hurled from the bottom of the hole, and finally ground into particles just small enough to pass between the tube and the side of the hole. It is evident, from the construction and action of this bit, that while successful in comparatively soft rock, it is unsuited for boring in very hard strata.

173. Fig. 94 shows a Davis calyx drill in a hole. The calyx tube is fastened near its middle to the bore tubes by means of a key and plug *C*. The top portion *D* of this tube forms a receptacle for the large particles from the bottom of the hole, and the lower portion *B*, to which the bit *A* is attached, forms a core-barrel. A peculiar feature about this drill is that it does not force the large particles of debris to the surface, but deposits them in the receptacle as shown at *E*, while the fine particles are carried to the surface. This separation is due to the fact that the high velocity which the water has in passing up between the calyx tube and the side of the hole is suddenly diminished at the top of the calyx tube on account of the increased section of its passage

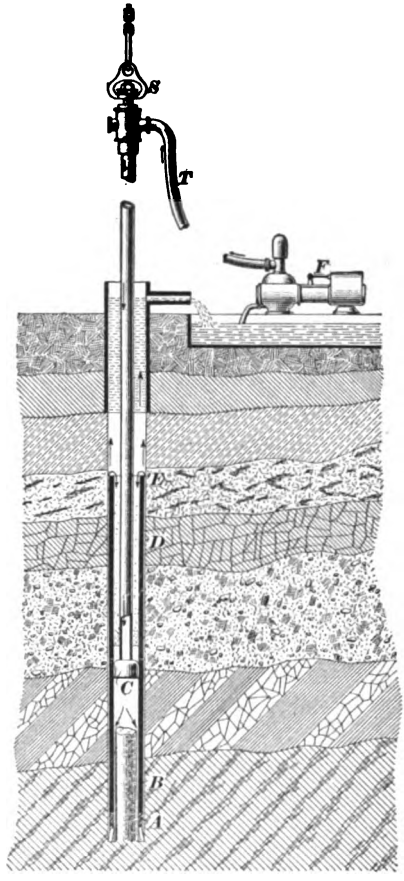

FIG. 94.

along the bore tube. When the core is removed, the coarser material is dumped from the receptacle. The weight upon the bit is regulated, and the tubes are suspended by a tackle attached to them by the swivel *S*. The pump *F* forces water into the bore tubes through the flexible tube *T*, and the entire cycle of the water is indicated by the arrows.

When the core is to be removed, a few small, hard stones are dropped down the bore tubes; these tightly wedge themselves between the core and calyx tube, and whenever the latter is raised, the core is broken off near the bottom and raised to the surface.

On account of the peculiar action of the Davis calyx drill, the rate of advance is remarkable, frequently being 75 feet per day, counting time required for changing bits and removing cores. In case very hard rock is met, a diamond bit can be used and rotated at a constant speed. The rate of turning is only about 12 revolutions per minute.

COMPRESSED-AIR COAL-CUTTING MACHINERY.

COMPRESSED-AIR COAL-CUTTING MACHINES.

1. The most expensive and difficult operation in the production of coal is, in general, the process of loosening it from its solid state. This is accomplished in three ways: (1) By blasting it from the solid, as is done in most of the mines in the anthracite regions and in many bituminous mines. (2) By undercutting and blasting down, or letting the weight of the roof break the coal; this process is followed in a large proportion of the bituminous mines which are worked on the room-and-pillar system and in all mines that are worked on the longwall principle. (3) By shearing either in the center or on one rib and shooting to the shearing; this method is used in many bituminous mines where there is a strong roof and where the run-of-mine basis is used. There is, of course, some intermixing of the above methods, as in some mines they both undercut and shear in order to protect a tender roof and get a large proportion of lump coal; for when the coal is both undercut and sheared on one rib, it can be brought down from the solid with a very light charge of powder. In some cases no powder at all is used and the coal is simply wedged down after being undercut and sheared.

2. Many machines have been constructed to undercut and shear coal, and they are now so perfected to meet the various requirements found in the different fields that it

For notice of the copyright, see page immediately following the title page.

may safely be said that coal-cutting machines will in the future do the greater proportion of the undercutting and shearing. The most successful of these machines may be divided into two classes: (1) Those which act percussively and cut with a single large chisel, very much like percussive rock-drills. (2) Those which cut with a series of steel teeth which successively scrape off steps of coal. This latter class may be subdivided into four classes: (1) Those which have a series of steel teeth mounted on an endless chain, which is moved in one direction so as to cause the teeth to cut the coal continuously. (2) Those which have the teeth set in a rotating bar, which advances parallel to itself as the teeth cut the coal. (3) Those which have the teeth set in the periphery of a wheel, which rotates and advances as the cutting progresses. (4) Those which cut out a large cylinder of coal and which are used almost exclusively for driving headings.

3. Machines for mining operations have been constructed to be operated by two great powers: (1) compressed air; (2) electricity. The former class is the only one that will be treated in this Paper.

COMPRESSED-AIR POWER.

4. Compressed air improves the ventilation of a mine to a limited extent, and in cases where work is being done in advance of the air-current, it is sometimes depended upon exclusively to ventilate the workings. In mines where gas is encountered, compressed air is entirely safe, because in its use there is no sparking, as there is in the use of electrical power. Therefore, in this class of mines, compressed air is frequently used; it will undoubtedly be used almost exclusively in the future, owing to the danger of igniting the gas where electricity is employed.

5. Compressed air is furnished by a compressor, which is situated, if possible, at some central point, and the air is

carried from the compressor to the different working faces throughout the mine by means of standard wrought-iron pipes. The machines are connected to the pipe system by means of a section of rubber hose, which is usually either made extra heavy and strong or is wound with wire, so as to withstand the pressure and prevent it from injury from falling rock or when being dragged over the rough mine floor. This flexible tube gives freedom of action and obviates the necessity of making pipe-connections having flexible joints and enables the machine to be moved across the working-face of the room at the will of the operator.

6. In compressing air, its temperature is raised, and in consequence of the cooling which takes place in the pipes running through the mine, considerable energy is lost unless the air is reheated just before using, which of course is generally impracticable in mining work. However, this objection to the use of compressed air is largely overcome by cooling the air at the compressor during the process of compression, so that it will not suffer a large diminution of temperature and consequent loss when taken into the cool mine through pipes. This is accomplished by water-jacketing the air-cylinder or air-cylinders of the compressor, and in the compound type of compressors, by passing the air through an intercooler between the cylinders, which is made up of a network of pipes having cold water flowing through them. The cooling operation is also assisted by taking the air from outside of the engine room whenever practicable, so as to have the incoming air as cool as possible. This is more fully accomplished in a compound compressor having two or more cylinders with intercoolers between them than it can be in a non-compound compressor, where all the compression has to be made in one cylinder; for in the compound compressor more cooling surface is secured and more time is given in which to cool the air, since the air goes through two or three stages instead of one, as in the non-compound machine.

7. Taking a mining plant as a whole, it is more economical to use air under a high pressure than under a low pressure, because the air can be conveyed through the mine in smaller pipes, which are less expensive and can be more easily installed and repaired; and machines with smaller cylinders can be used, for the reason that air under high pressure can be used expansively to a greater degree than air under low pressure. The use of high pressure in machines, however, demands a valve action that will give a positive and sharp cut-off of the access of the air to the cylinder-ports. The loss of pressure in pounds per square inch by the flow of air through pipes varies directly as their lengths and increases about as the square of the velocity; and as the volume of air varies as the pressure, it is evident that a much greater amount of energy of compressed air is delivered to the machines at the working-faces by the use of high pressure.

8. A great advantage in the use of compressed air is that in case a machine operated by it is not working, no energy is lost, as most of the modern air-compressors are fitted with pressure regulators, which operate throttle-valves on the steam-pipe to the compressor, causing it to slow down when the machines are not in use and the pressure in the pipe-line is increased; or, *vice versa*, when there is a heavy demand by the machines, the throttle-valves in the steam-pipe are opened, giving the compressor more steam and increasing its speed.

9. There is little or no danger in the use of compressed air, as when a pipe is burst by the pressure, it simply flattens out and the escaping air does no damage, simply having a tendency to make the surrounding space cool and to freeze any moisture there may be in the surrounding air. The exhaust from the machines, to a limited extent, has the same effect on the working places, improving their ventilation and keeping them moderately cool and comfortable for the men.

PICK MACHINES.

10. The pick, or percussive, type of machines were the first power machines used to undercut and shear coal to any considerable extent, and owing to their simplicity and adaptability for working where considerable timber is required to support the roof, and where iron pyrites or other impurities are found in the coal, there can be no doubt but that the pick machine will always be used.

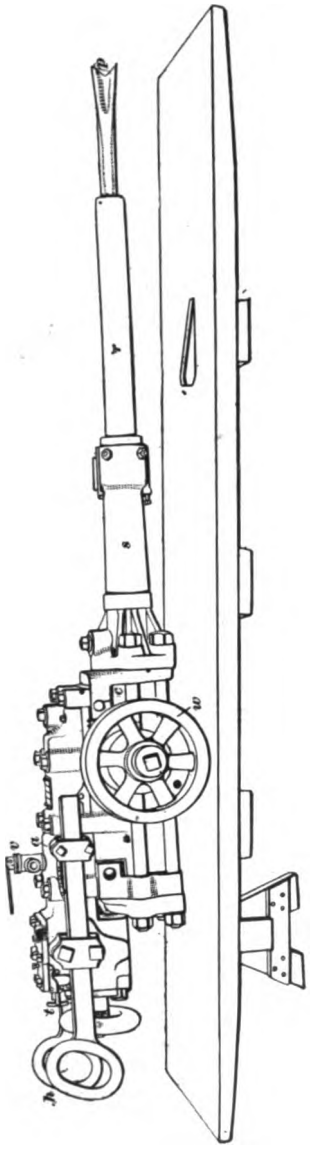

FIG. 1.

DESCRIPTION OF THE PICK MACHINE.

11. Fig. 1 shows a pick machine on an inclined platform. It consists essentially of an air chest *a*, an air-cylinder *c*, and a piston-rod *r*, all mounted on wheels *w*. Inside of the chest is a valve motor, which admits air to the cylinder at the different ends alternately, giving a reciprocal motion to the piston. The piston is made long, so that an undercut can be made the desired depth without making the front of the cut high enough for the main body of the machine to enter. The sleeve *s* is strongly bolted to the cylinder and serves as a front cylinder-head and also as a support to the piston-rod. The pick *p* fits into a tapered socket in the end of the rod,

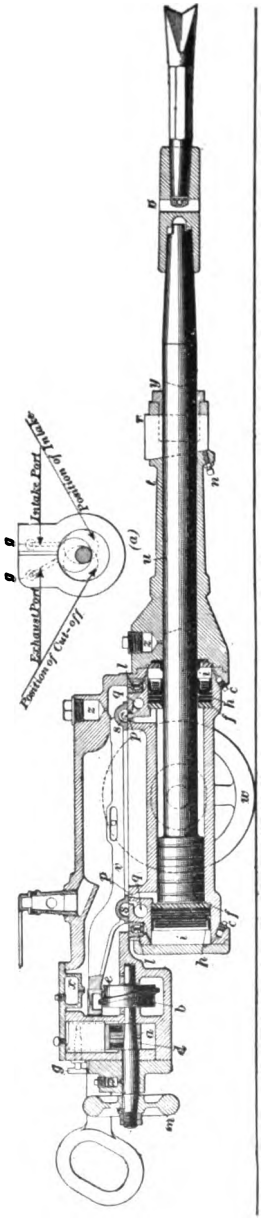

FIG. 2.

and is sharpened like a fish-tail, as this form is the least liable to glance to one side when the blow is struck. Air is admitted to the air chest through a valve *v*. The speed of the machine is governed by rotary throttle-valves *t*. The runner controls the machine by the handles *h*.

12. Fig. 2 shows a longitudinal section of this machine and illustrates the detailed mechanism. The distinctive feature of this type of machine is the valve action, which is independent of the action of the main piston feed and is worked by a small, independent, single-cam rotary *a*, a cross-section of which is shown at (*a*). The advantage of this arrangement is that in case the piston does not make a full stroke on account of the resistance offered to the bit, or in the event of the bit sticking in a crevice of the coal, the machine will not run back and forwards on the piston as much as when the valve action is controlled by the main piston; therefore, the machine is easier handled and there is less danger of the machine hurting the runner. With the independent valve action, however, the piston will not strike as heavy a blow with a fractional stroke as it will with a full one.

The small rotary engine *a* turns the shaft *d*, on which is fastened the spiral wheel *b*, which travels in a hardened-steel cup *e*, which is set into the neck of the main valve *v*. By this arrangement the valve is given the necessary travel on the valve-seats *s*.

The runner controls the rotary engine, and thereby the main valve, by the throttle-valves *g*, there being two of these valves, one governing the inlet of the air and the other the exhaust. By throttling the exhaust, a little back pressure is secured against the cam, giving it a steadier motion. The fly-wheel *m* is used to start the rotary and give it a steady, even motion while in operation.

From the nature of the work which a pick machine must do, it is evident that the length of the stroke must vary, and provision must be made to stop the piston without detriment to the machine when the pick meets no resistance. This is accomplished by the steel buffers *f* and leather cushions *h*, which are supported by the air acting as cushions within the chambers *i*. The small passages connecting the chambers *i* to the main air chest have check-valves *l* in them, which will allow the air to pass into the cushion chamber, but will not permit it to go back into the air chest when the buffers are struck by the piston, whereby a greater cushioning effect is secured, as the air coming from the air chest is at standard working pressure, but when confined in the small cushion chamber and still further compressed by the action of the blow of the piston, the pressure is still further increased.

The air is admitted to the main cylinder through the ports *p*, and is exhausted from the main cylinder through the exhaust-ports *q*, as shown by the arrow. The chambers *i* are drained by means of the plugs *c*. The valve-motion is such that the air on entering the cylinder is cut off at less than half of the piston stroke when the machine is being operated at from 190 to 200 strokes per minute, regardless of the position of the piston.

The sockets of the chuck *o* are tapered and the end of the piston and the pin of the pick have a corresponding taper,

so as to do away with the keying of the chuck on to the piston or of the pick into the chuck. In Fig. 1, the chuck is not used and the tapered socket is in the end of the piston itself. The tapered key *r* passes through the sleeve *t* and the main piston *u* and is held in place by a set-screw *n*. This prevents the piston from turning around and holds the pick in proper position at all times.

The wheels *w* are made of various sizes, ranging from 12 to 20 inches in diameter, so as to suit the various requirements of the different veins. The bushing *y* is made of bronze and is intended to take the wear of the piston, and it can be easily and cheaply renewed when worn.

The machine is kept oiled by the main automatic oiler *x*, from which the oil is carried to the different parts of the machine by the air-current, and by the small oilers *z*, which oil the bearings and supplement the automatic oiler. The weight of this machine is about 735 pounds and its height is about 17 inches, and it will make an undercut of from 5½ to 6 feet.

13. Fig. 3 shows another type of pick machine, the distinctive feature of which is the valve action, which is

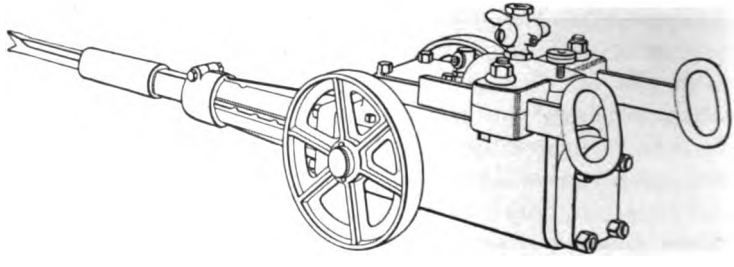

FIG. 3.

positive and depends upon the movement of the main piston on a riffle-bar, and in this respect it differs from the machine already described. The cut-off is adjustable, and consequently the machine can be worked successfully under high or low pressure.

With this type of valve action, the runner can cause the machine to run back up the platform by simply allowing the

pick to rest against some strong projection or shoulder of the coal, and if the pick sticks it must free itself before the back stroke is finished, or otherwise the machine will work back and forwards on the piston.

These two machines illustrate the general types of pick machines, the chief difference being in the valve action.

METHOD OF OPERATING THE PICK MACHINE.

14. The pick machine is placed upon a platform, as shown by Fig. 4, which is inclined towards the face, so as to neutralize the recoil of the machine by gravity, and at the same time enable the operator to advance the machine

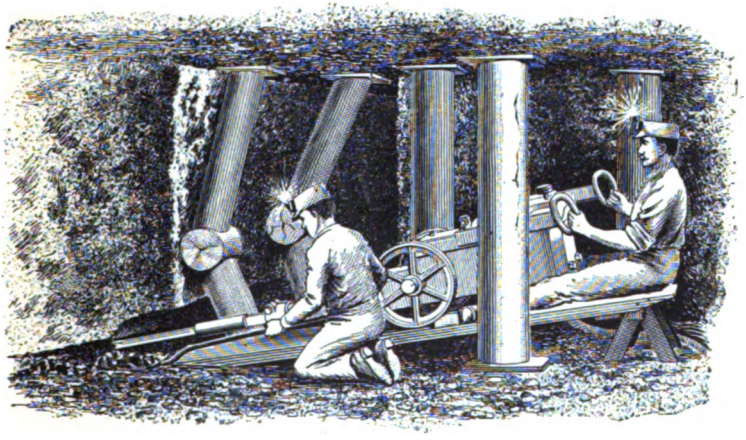

FIG. 4.

as the cut deepens. The pick strikes from 190 to 210 blows per minute, as desired, and as the machine cuts under the coal, the operator allows it to run forwards, down the platform. The helper shovels away the debris or cuttings, using a special long-handled flat shovel. Only two men are required to operate the machine, one skilled man as runner and an ordinary laborer as helper. The runner sits back of the machine, taking hold of one or both of the handles, and directs the blow of the machine by their use. He places one foot, on which, as a rule, he fastens a small block of

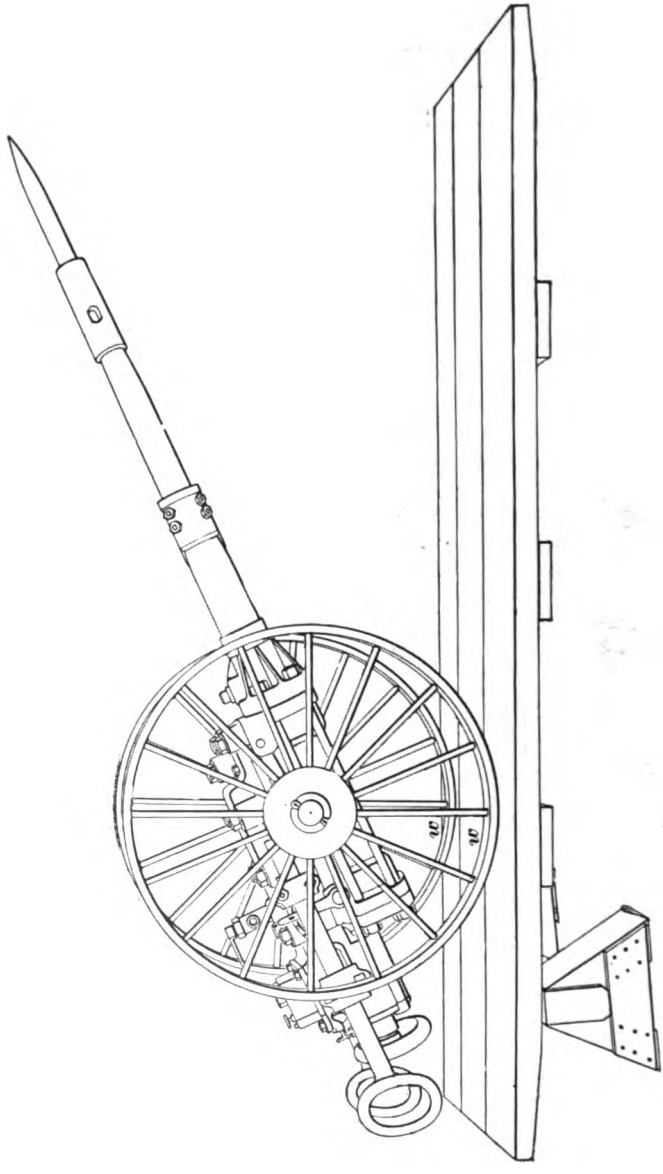

FIG. 8.

wood by a leather strap, under one of the wheels, thereby blocking the recoil of the machine.

15. A groove is first cut in the coal along the bottom to a depth of 1 foot and 3 or 4 feet along the face. This groove is then enlarged by blocking down some of the coal by lifting the pick and striking several inches above the first groove. This enables the runner to see into the cut, and he repeats the same operation until the desired depth is reached. When the cut is finished, it is from 8 to 16 inches high in front and tapers down to 2 or 3 inches in the rear. This gives the cut a V shape and causes the coal, when blasted down with a light charge of powder, to roll over and out of its original position in such a manner that the loaders can readily attack it. Two platforms can be used to advantage, so that when the machine has completed the cut on one, it can be moved to the other without stopping.

16. The pick machine, being mounted on wheels, can be readily shifted from one platform to the other or from one room to the other; very often the machine is simply pulled from one room to the other through break-throughs or cross-cuts by the machine runner and helper, and in this respect it is very much more convenient than other types of machines, which are so heavy as to require mechanical means or the use of a mule and driver to shift them from place to place. As a rule, the pick machine is moved by loading it on a low, flat truck, on which the machine runner and helper can push it without the assistance of mechanical methods.

SHEARING WITH PICK MACHINES.

17. Fig. 5 shows a pick machine, mounted on large wheels, for shearing or making a vertical cut in the coal at the face of an entry. This machine is in all respects similar to the first one described, except that the wheels *w* are larger, as a rule ranging from 34 to 40 inches in diameter. When mounted on 40-inch wheels, it will make a shearing 5½ feet deep and to an equal height or higher if placed on

slack. Fig. 6 shows the machine in position for making a shearing on one side of the entry; it will be noticed that the lower portion of the shearing is made wide enough for the

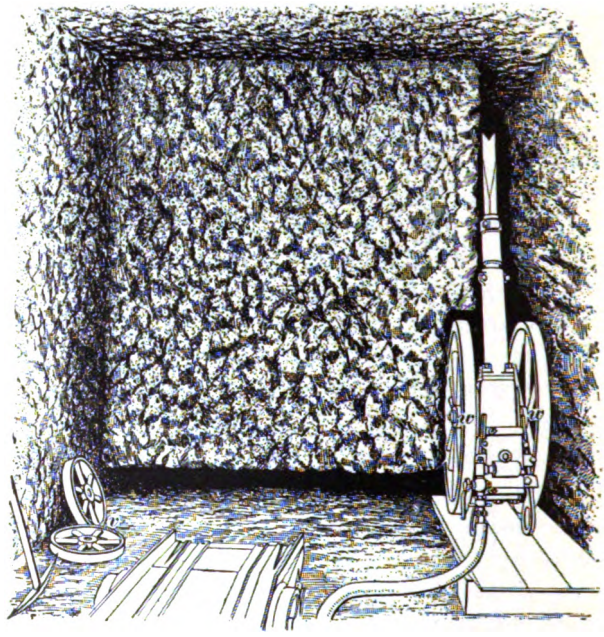

FIG. 6.

wheels to enter the cut. This is necessary where a deep cut is desired, but for shearings of ordinary depth it is not essential.

The operation of the machine for shearing is the same as for undercutting, except that the runner has to assume a different position. Where there is sufficient height, he generally directs the machine by standing up and taking hold of both handles.

If it is desired to both undercut and shear the coal, the undercut is first made, then the small wheels *v* are taken off the machine and the large wheels *w* put on.

It is more expensive to shear the coal than it is to blast it even after undercutting, but a larger per cent. of lump coal

is produced in the tight shot, owing to the fact that there is a loose end, and less powder need be used.

The truck, of which the front end is shown in the figure, is used to carry the machine from place to place.

CONDITIONS FAVORABLE AND UNFAVORABLE FOR PICK MACHINES.

18. Pick machines can be used under all conditions favorable to mechanical methods of mining coal, and the only conditions which preclude their use where undercutting is necessary are:

1. Too great a pitch, or dip, of the vein.
2. Bad roof, where props must be set up close to the face and in great numbers.
3. Lack of working space along the face.

The second difficulty can be overcome to a large extent by working in and around the props, as may be seen by referring to Fig. 4, where the machine is shown working among props and cockermegs, used to support the undercut portion of the coal.

The last difficulty is encountered in longwall work, when the gob fills the space where the coal has been taken out to within 2 or 3 feet from the working-face. This can be overcome to some extent by working the machine at an oblique angle instead of square to the face.

19. It will be seen from the construction and method of operating the pick machine that it can cut the coal surrounding any foreign matter which may be embedded in the coal, and can therefore remove such hard material without coming in contact with it and injuring the machine. In this respect pick machines are suitable for working seams of coal having rolls in the bottom and containing sulphur balls, slate, or other impurities, which will blunt or destroy any steel cutting tool which they might come in contact with.

For working pillar coal on which there is any squeeze, the pick machine alone is applicable, owing to the fact that

it is the only machine that is light and can be quickly and easily handled and that is in no way braced against the roof or surrounding coal, and further because it can not be affected while working by a slight settling of the coal undercut.

There is a still further limitation to machines, and that is their work in thin seams of coal; but in a great many cases this can be overcome by doing the undercutting in the bottom fireclay, or clod.

20. A long working-face is best for machine mining, and where it is not possible, either from the nature of the coal and roof or the method of working, the efficiency of mechanical methods of undercutting is lessened, because more branches of pipe are required and more frequent shifting of the machine from place to place is necessary, which consumes time. Again, it requires that more fast ends be cut, that is, the opening cut in the corner of the room, which takes relatively more time than the cutting of the balance of the room after one cut is put in to the desired depth.

21. There is no doubt that as far as practicable the methods of working coal seams will be modified in the future to suit machine mining; for mechanical methods of undercutting have proved to be so practical and economical, and mining-machines have attained such a high degree of perfection, that it will not be profitable to use hand methods.

22. Seams of coal less than 3 feet thick can not be as profitably worked with machines as thicker veins, because it is more difficult to handle the machines, as the workmen are cramped for room; but this limitation will apply with almost equal force to hand methods. Low seams require more undercutting for a given output than high ones, and therefore machine mining is evidently more economical in seams just high enough for the machines to be properly handled, providing other things are equal. Further, as a rule, higher rates are paid in thin seams, giving still more

margin for saving. Of course, with any method of undercutting, a greater percentage of lump or marketable coal is obtained from the high seams. For instance, it will be seen by referring to Fig. 7 that the amounts of coal made fine by undercutting in the seams *A* and *B* are equal, because the undercuts are the same size, which is generally true in practice.

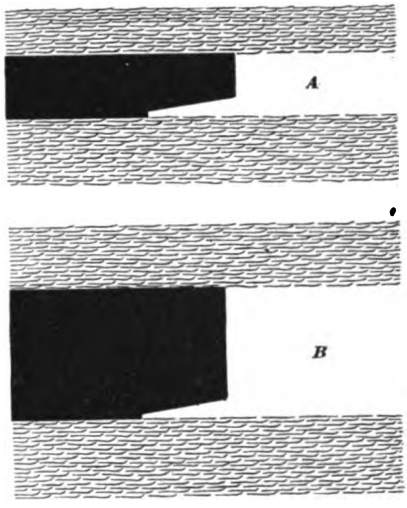

FIG. 7.

In hand methods a quite general rule is to put in an undercut to a depth equal to the height of the coal, but in machine mining this rule is not so closely followed, although the rule holds good to a considerable extent, as the best results in blasting are secured by following it approximately. If this rule is followed, the ratio of small coal to lump coal is the same for high or low seams, provided the undercut is V-shaped.

WORKING CAPACITIES OF PICK MACHINES.

23. Aside from the machine itself, this depends upon the nature of the coal mined and the strength and tact of the runner. A good machine, such as has been illustrated, can undercut 450 square feet in 10 hours, where an ordinary man, doing nothing but undercutting, could undercut about 120 square feet in the same time. In other words, a pick machine will undercut from 50 to 100 tons of coal in 10 hours in seams varying in thickness from 4½ to 6 feet. The cost of undercutting coal with pick machines in seams from 4½ to 6 feet thick is approximately 10 cents per ton. These figures must not be confused with phenomenal records

which have been made and which are the exception and not the rule. In Western Pennsylvania, a pick machine has undercut as much as 1,400 square feet in 9 hours, and in 8-foot seams the pick machines have each cut as high as 240 tons per shift of 10 hours.

CALCULATIONS RELATING TO PICK MACHINES.

24. The work done by each stroke of a pick machine can be calculated by the formula

$$U = \frac{H \times 33{,}000}{n}, \qquad (1.)$$

in which U = work done per stroke;
H = horsepower;
n = number of strokes per minute.

EXAMPLE.—A 5-horsepower pick machine makes 165 strokes per minute; what amount of work is done by the cutting edge of the pick per stroke?

SOLUTION.— $U = \frac{5 \times 33{,}000}{165} = 1{,}000$ foot-pounds. Ans.

25. The force of a blow struck by a pick machine can be determined by the formula

$$F = \frac{v^2 W}{2 g d}, \qquad (2.)$$

in which F = cutting force of pick in pounds;
v = velocity of pick in feet per second at moment of impact;
W = weight of pick (and piston) in pounds;
d = depth of cut per stroke in feet;
g = 32.16.

EXAMPLE.—It is found that a pick machine whose pick and piston weigh 200 pounds cuts to a depth of 2 inches per stroke, and that the velocity of the pick at impact is 20 feet per second. What is the cutting force of the pick?

SOLUTION.— $F = \frac{20^2 \times 200 \times 12}{2 \times 32.16 \times 2} = 7{,}462.7$ pounds, nearly. Ans.

26. The student should carefully notice that the force with which the pick strikes depends largely upon the distance it penetrates the coal. For instance, if the pick struck soft "mother coal," it would penetrate it for perhaps a foot, while if it struck hard rock it would penetrate it for perhaps only $\frac{1}{4}$ of an inch. In either case the energy stored up in the pick at impact would be given up in a space equal to the depth of the cut, and therefore, since it requires a greater resistance to stop the pick in $\frac{1}{4}$ of an inch than it does to stop it in 1 foot, it is evident that the blow is greater on the rock than on the "mother coal."

27. The velocity of the pick at impact can be determined by the formula

$$V = \sqrt{\frac{2gapl}{w}}, \text{ or } \sqrt{\frac{2gU}{w}}, \qquad (3.)$$

in which V = velocity at impact in feet per second;
$g = 32.16$;
a = area of piston in square inches;
p = steam pressure in pounds per square inch;
l = length of stroke in feet;
w = weight of pick and piston in pounds;
U = work done per stroke.

EXAMPLE.—The diameter of the piston of a pick machine is 4 inches, the weight of the piston and pick is 200 pounds, the length of the stroke is 10 inches, and the air is used at a pressure of 75 pounds per square inch. What is the velocity of the pick at impact?

SOLUTION.—

$$V = \sqrt{\frac{2 \times 32.16 \times 3.1416 \times 2^2 \times 75 \times 10}{200 \times 12}} = 15.9 \text{ feet per second, nearly.}$$

Ans.

28. If the power remains the same, it is evident that the greater the number of strokes of a pick machine the less will be the energy given to each stroke, and consequently the depth of cut will be less. It has been found most economical to use a given power in producing a comparatively small cutting force and rapid blows of the pick.

PICK SHEARING-MACHINE.

29. Fig. 8 shows a pick or direct-acting shearing-machine especially adapted for driving entry where the coal will shoot from the solid. The principle of the machine is

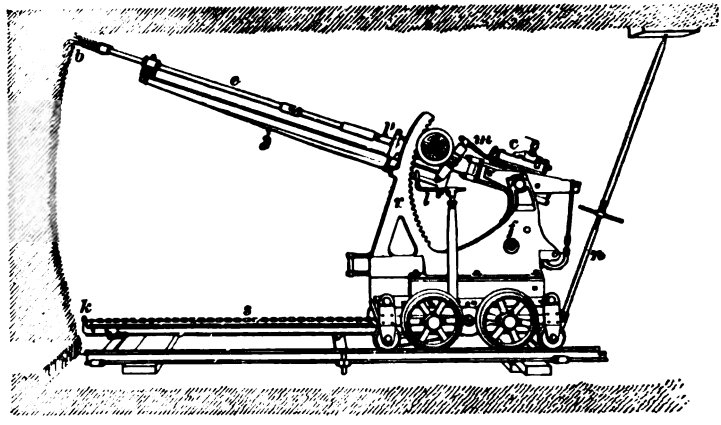

FIG. 8.

essentially the same as that of the pick machines already described. The cylinder *c* is pivotally supported on the frame *f*, so that it can move through an angle of about 60°. The gib *j* supports the cutter rod *e*, which is an extension of the piston-rod *p*, and on the end of which is placed the bit *b*. The operation of the machine is entirely under the control of the operator, who directs the blows by means of the lever *m*, which works a system of gears engaging with the curved rack *r*. A special piece of track bound together with iron ties is kept in advance of the common track for the machine to stand upon while at work. The chain *s*, which is fastened to the end *k* of the rail and the bottom of the rear jack *n*, is used to hold the machine in place and to advance it by turning the lever *l* whenever a cut has been made from top to bottom equal in depth approximately to the length of the stroke of the piston.

30. This machine will make a shearing in the center of the entry 6 inches wide, from 5 to 8 feet deep, and from

4 to 10 feet high. It strikes quickly, about 300 strokes per minute, and weighs 1,600 pounds. A great advantage with this form of shearer is its ability to work above and below large and around small sulphur balls, the former being broken when possible by a hammer and the latter being removed without actually cutting them up, which is practically impossible.

31. Shearing-machines make it possible to drive entry rapidly and at the same time to produce lump or good marketable coal, and there can be no doubt but that these advantages will hasten the time when it will be commercially possible to adopt the best all-around method of working almost every seam of coal, namely, longwall retreating, which consists of driving entries to the boundaries of the territory to be developed and working out the coal from the boundaries to the drift mouth or shaft bottom.

CHAIN-CUTTER MACHINES.

DESCRIPTION OF A CHAIN-CUTTER MACHINE.

32. Fig. 9 shows a view of a chain-cutter machine which consists essentially of a bed-frame, a sliding chain-cutter frame, and an engine. The bed-frame consists of two rectangular steel channel-bars *a* and two steel angle-bars *b* fastened together by means of heavy cast-steel and wrought-iron braces *c*. The feed-racks *d*, which are made of the best rolled steel and have machine-cut involute teeth, are mounted on the bed-frame. These racks are made up in sections, so that in case a tooth gets broken it can be replaced without renewing the entire rack. The rear end of the bed-frame is provided with hooks *e* for moving the machine, and a cross-bar *f*, on which the jack for taking the backward thrust of the machine is placed.

A heavy steel cross-girt *j* joins the channel-bars *a* at the front end of the bed-frame. The jack *g*, by which the machine is braced against the coal face, is placed on top of

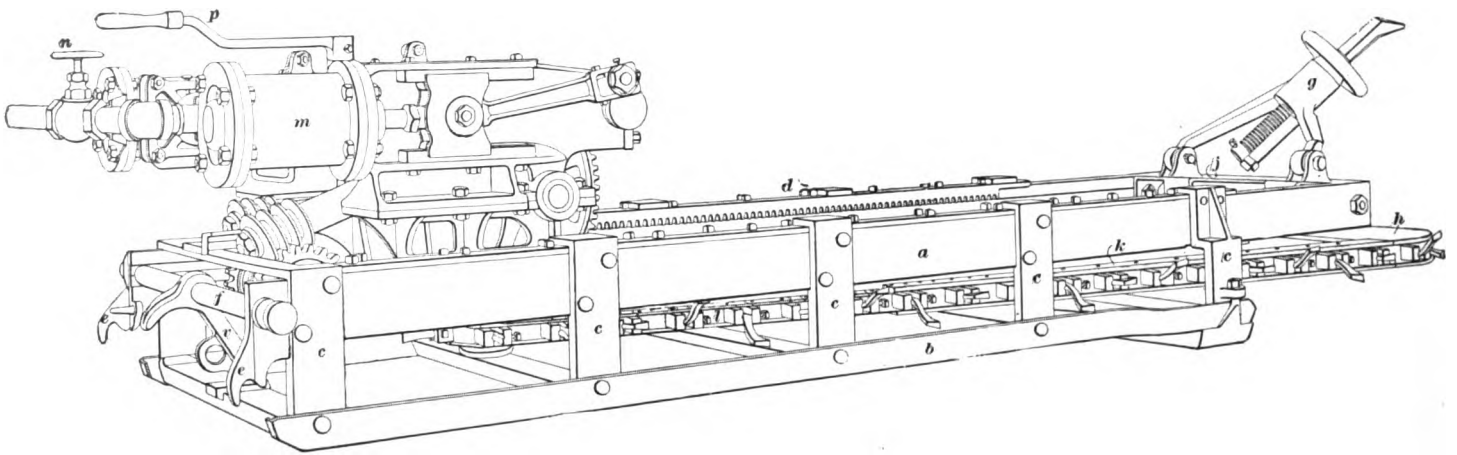

FIG. 9.

this cross-girt, and the guides for the center rail of the sliding cutter frame are attached to the bottom of it. These guides consist of two adjustable steel parts of extra length, to give large wearing surfaces to the composition gibs which form the bearing of the center rail. The bed-frame is designed strong and rigid, so that there can be no bending due to the inequalities in the floor of the mine or the jacking down of the machine just before starting a cut. This rigidity of the frame does away with the friction which is unavoidable in light flexible frames.

The cutter frame is shaped like an isosceles triangle, and consists merely of one steel center rail, a cutter-head *h*, and two side guides *k* for the cutter chain *l*. This sliding frame is contained wholly, with the exception of the cutter-head, within the stationary bed-frame. This arrangement insures perfect protection to persons working around the machine while it is in operation or being moved from one place to another. As this frame comes in direct contact with the coal, it is made strong and has large wearing surfaces, and as its shape is triangular, only three wheels are required for the cutter chain—two sheaves in the cutter-head and a sprocket-wheel at the apex of the frame for conveying power to the cutter chain. The center rail is secured to the sliding carriage, on which the engine *m* is placed, by means of a steel step casting. An auxiliary cutter (not shown in the figure) is placed at the middle and on top of the cutter-head *h* to resist the side thrust produced by the cutter chain.

The driving mechanism consists of two steel pinions and two steel gears, while the feeding mechanism consists of a system of worms and gears. The valve *n* controls the air supply to the engine, and the feed mechanism is controlled by the lever *p*.

33. Owing to the fact that these machines must be taken from one room to another, their size is restricted within certain limits. For instance, as they must be placed upon a truck, they can not be wider than the gauge of the

track nor longer than a mine-car, otherwise special provision would have to be made with regard to the width and height of many portions of the haulageways. This obstacle, however, is not of any particular consequence, as it is found that other conditions, such as weight and room at the working-face, reduce the most economic size for these machines even below that required for transportation.

34. Fig. 10 shows a side view (*a*) and a front view (*b*) of a portion of a cutter chain. It also shows a bit or cutter (*c*), which is made of good tool steel. The endless chain carrying the cutters is subjected to great stresses and

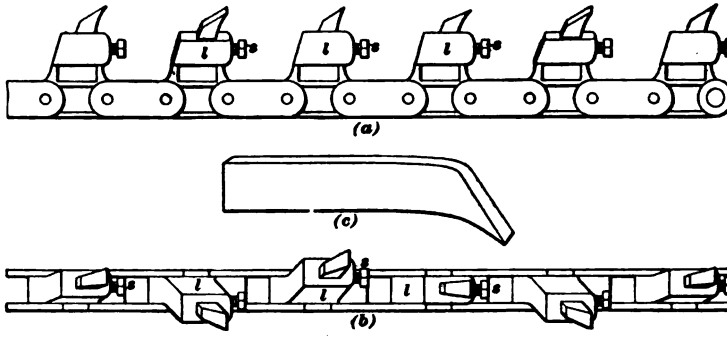

FIG. 10.

a great amount of wear and tear, and consequently must be made strong and of as few parts as possible. Since the cutters must be sharpened frequently, provision must be made to make them detachable. This is done by means of sockets in each alternate link *l*, in which the cutters are placed and held by set-screws *s*.

TYPES OF CHAIN-CUTTER MACHINES.

35. The general principle and construction are the same for all modern chain-cutter machines, the only difference being in the details, which the student can readily understand after studying one type, as soon as he sees them, and therefore they need not be described in this Paper.

FIG. 11.

METHODS OF OPERATING AND SHIFTING CHAIN-CUTTER MACHINES.

36. The operation of these machines can be understood by referring to Fig. 11, in which one is shown at work. It is first placed directly in front of the working-face, at the point where the undercut is to be started, and leveled up to suit the bottom of the seam of coal. By placing an iron rail under the rear end, the machine can be slid along easily after each cut is made. The machine is held rigidly in place by the rear jack *a* being placed against the roof and tightened up, and the front jack *b* being braced tightly against the face of the coal. The operator usually stands as shown, and as the chain cleans the cuttings away as they are made, a helper is not absolutely necessary, as is the case with pick machines; yet it is best to have an ordinary laborer to keep the cuttings shoveled away and help the runner slide the machine along the face of the room from time to time as each cut is completed.

37. When the cut is made across the room, the machine is slid to the road head and mounted on a truck such as is

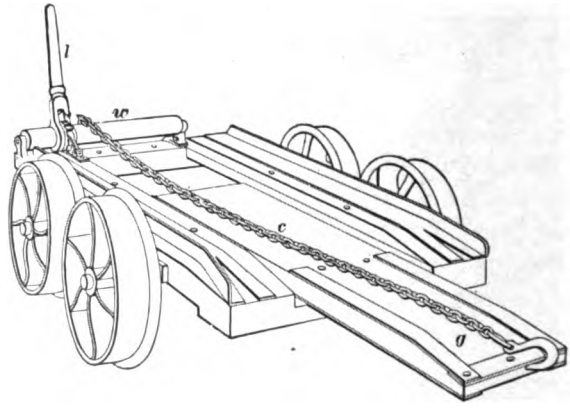

FIG. 12.

shown in Fig. 12. The truck is run to the end of the road and the guide *g* run out. The front end of the machine is then placed upon this guide and the hook on the end of the

chain *c* is placed in the hole in the brace *v*, Fig. 9, at the middle of the rear end of the machine. The machine is finally pulled on to the truck by means of the windlass *w*, which is operated by the ratchet-lever *l*. The truck is then drawn to the next place by a mule or horse and the machine run off to begin a new cut as before.

For low seams the bed-frames of the machines are provided with axles and wheels. The wheels are removed while the machine is working and replaced whenever it is necessary to transport it.

CONDITIONS FAVORABLE AND UNFAVORABLE TO CHAIN-CUTTER MACHINES.

38. In order that chain-cutter machines can be used, it is essential that the seam of coal be comparatively free from balls of iron pyrites, for it is practically impossible to cut through them; and if the cutters come in contact with a large sulphur ball, they break or become blunted, or something else is liable to break about the machine. If the cutter chain is suddenly stopped while running at full speed, enormous stresses are set up throughout the various parts of the machine, showing that the weakest part should be strong enough to withstand such stresses.

Another condition under which these machines can not be worked is where the roof is bad and props must be used close to the face of the coal. A clear space of 12 to 16 feet in width is necessary along the face to work chain-cutter machines. It is found that these machines are failures at some mines on account of the incessant jarring of the roof by the rear jack. Where there are cross-slips in the roof, the runner is in great danger of rock falling from the roof on account of this jarring.

39. It is impracticable to work coal-cutting machines either in pitching or in very low seams, because of the difficulty in handling them under the conditions which exist there. In pitching seams, transporting the machine from one place to another is tedious and troublesome, and great

difficulty is encountered in keeping the machine up to its work and sliding it along the face a short distance at a time as the cuts are finished. In low seams, however, the greatest difficulty is found in sliding the machine along the face, because there is not sufficient room for the workmen to use the bars and levers to advantage. Chain-cutter machines can not be used to undercut coal having a squeeze upon it, which is generally the case in pillars, because the coal presses down upon the cutter-head while the machine is working, and eventually stops it.

On the other hand, seams which are comparatively level and free from sulphur balls can be worked more satisfactorily and economically with chain-cutter machines than with any other type, providing, of course, that the roof is good enough to permit their use.

WORKING CAPACITY OF CHAIN-CUTTER MACHINES.

40. There are so many conditions, such as hard coal, bad roof, slips, and sulphur balls in the coal, and time required for moving and for repairs, which affect the results of chain-cutter machines that it is impossible to give anything but an approximation of their capacity. A good chain-cutter machine, however, will make from 30 to 45 cuts, 44 inches wide and 6 feet deep, in 10 hours, under moderately fair conditions.

CHAIN-CUTTER SHEARING-MACHINES.

41. These have not been used to any considerable extent as yet, and none have been built to run by compressed air, electricity being the power used. They are in principle, however, like the ordinary chain-cutter machine, except that the sliding frame is held in a vertical plane and the bed-frame is supported on columns.

CALCULATIONS RELATING TO CHAIN-CUTTER MACHINES.

42. The rate of feed is proportional to the speed of the cutter chain in a chain-cutter machine. Hence the cutting force of the chain can be found by the formula

$$F = \frac{P \times 33{,}000}{S}, \qquad (4.)$$

in which F = cutting force of cutter chain in pounds;
P = horsepower of engine;
S = speed of cutter chain in feet per minute.

EXAMPLE.—If a 15-horsepower engine drives a cutter chain at the rate of 300 feet per minute, what is the mean cutting force of the chain?

SOLUTION.— $F = \frac{15 \times 33{,}000}{300} = 1{,}650$ pounds. Ans.

It is also evident that the rate of advance and the speed of a chain cutter are inversely proportional to the hardness of the coal being cut, providing the power remains the same.

CUTTER-BAR MACHINES.

43. These machines have been almost entirely replaced by the chain-cutter types, because it has been found difficult to make them strong enough to withstand the strains to which a mining-machine is subjected when coal containing balls of iron pyrites or a roll in the bottom is encountered. The horizontal cutter-bar which contains the teeth or cutters is turned by a sprocket-chain, and the driving mechanism and cutter-bar are advanced as the cutting proceeds, very much the same as the sliding frame and driving mechanism of the chain-cutter machine. There is a chain on both sides of the bed-frame, which is provided with scrapers to convey the cuttings from the cutter-bar to the front of the undercut.

Where conditions are favorable, the cutter-bar machine has a capacity about equal to the chain-cutter machine, and it can be worked under conditions suitable for a chain-cutter machine.

THE LONGWALL MINING-MACHINE.

44. The longwall mining-machine, as its name implies, is especially designed for undercutting a longwall face. It consists of an engine or a motor mounted on a bed-frame, and a large cutter wheel, in the periphery of which are placed the cutters or bits, in a manner quite similar to that of setting the cutters in the cutter chain or the cutter-bar of the machines already described. The bed-frame is mounted on wheels which run either on a single rail or an ordinary track laid parallel to the face of the coal. The feeding mechanism is usually variable, and in case foreign matter is encountered, the operator can vary the angle of the cutter wheel so as to cut over or under such obstacles. This also enables the operator to follow the irregularities in the bottom of the seam. The rail or track on which the machine travels is taken up behind and laid in front of the machine, making it possible under favorable conditions to keep the machine continually at work and to make an undercut 800 feet long and from 3½ to 5 feet deep in 10 hours.

Owing to the fact that longwall methods are not generally employed in America, these machines are used mostly in Europe, and even there they are not very extensively used. Electricity is used to run the modern longwall machines, and a description of such a machine is given in another Paper.

THE AUGER MINING-MACHINE.

45. This machine is constructed on the principle of making an undercut by boring a great number of holes near the bottom of the seam, in such a manner that the adjacent ones will intersect each other. It consists of a number of augers placed in the same plane and parallel to each other, a bed-frame, and an engine or motor. The augers are simultaneously turned by the engine through a system of gear-wheels, and the bits of the augers form a broken line, so the one hole will cut into the other; and a cut equal in depth to the length of the augers and equal in width to the

distance across the face of the bits will be made when the augers have advanced the full run of the machine. Otherwise the machine is made and handled like the chain-cutter or cutter-bar machine. These auger mining-machines have not been used to any great extent, and, further, they are rapidly falling into disuse. For this reason they are not illustrated or more fully described.

THE STANLEY HEADER.

46. This machine is shown in Fig. 13. The driving and the feeding mechanisms are placed upon a massive frame *a*, which is mounted on wheels. When the machine is in place to commence work, it is held fast by the top

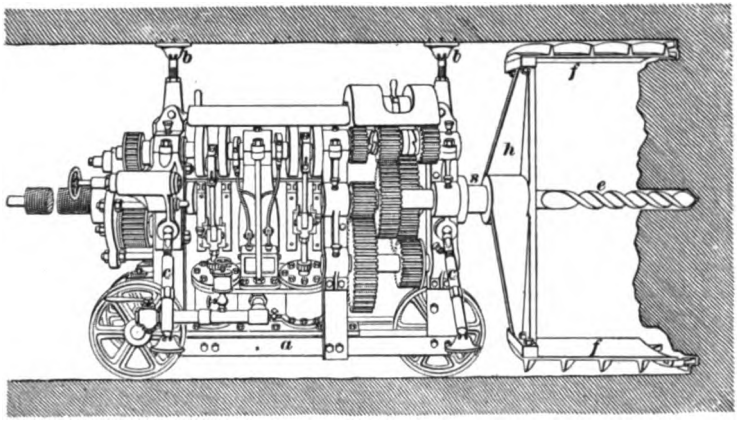

FIG. 13.

jacks *b* and the side ones *c*. At the end of the main shaft *s* an auger drill *e* is placed for the purpose of steadying the cutter frame while the machine is working. The cutter frame consists of the cross-head *h* and the arms *f*, on the ends of which the cutters or bits are placed. The driving mechanism is so constructed that different rates of speed of the cutter frame can be produced for a given rate of feed

advance, at the will of the operator or when different degrees of hardness are found in the coal. As the main shaft rotates, it advances and turns the cutter frame. The bits cut out an annular groove from 3 to 3½ inches wide, forming a complete cylinder of coal as long as the arms *f*. When this is done, the machine is run back and the coal is taken down and loaded up. The machine is again set in place and another cylinder cut out.

The cuttings are forced to the front of the annular groove by the scrapers on the arms *f*, and from here they are raked to one side of the machine by a helper whenever the revolving arms are not in the way. Lumps of coal which fall from the face are also drawn to the side by the helper, and finally loaded into a car. In many of these machines, however, the cuttings and the coal that fall while the machine is working are taken from the face by a friction worm and loaded into a mine-car by means of a conveyer or elevator.

47. The principal use of this machine is for entry driving, especially where it is not desired to make lump coal and where the work must be pushed rapidly. The Stanley header can cut out a cylinder of bituminous coal 4 feet in diameter and 5 feet in length in 15 minutes, and after making the necessary allowance for removals, a rate of advance equal to 75 feet per shift of 10 hours is accomplished. Where it is necessary to drive wide entries, two machines may be worked side by side, thus driving two parallel entries which nearly intersect each other. The thin pillar left between them can easily be cut out with a pick. If the coal could be removed as quickly as the cutting is done, the machine could advance an entry 12 feet wide 25 feet in 10 hours. As coal varies so much in hardness and in the amount of impurities it contains, it is possible to give only an approximation of the cost of driving entry with the Stanley header, which is about 25 cents per linear foot when a single cylinder 4 feet in diameter is cut out.

A SERIES

OF

QUESTIONS AND EXAMPLES

RELATING TO THE SUBJECTS
TREATED OF IN THIS VOLUME.

It will be noticed that the various Question Papers that follow have been given the same section numbers as the Instruction Papers to which they refer. No attempt should be made to answer any of the questions or to solve any of the examples until the Instruction Paper having the same section number as the Question Paper in which the questions or examples occur has been carefully studied.

MINE HAULAGE.

(1459) How many stages of underground haulage are there, and which should be the shorter ?

(1460) How many classes of wire-rope haulage are there ? Name them.

(1461) Is it always economy to use a self-acting plane for haulage ? Give reasons.

(1462) In what does the mechanism used on self-acting planes with heavy pitches differ from that used on self-acting planes with light pitches ?

(1463) Which is preferable on a self-acting plane with a light pitch, a two-rope system or an endless-rope system ?

(1464) What is essential when the length of a gravity-plane of light pitch run with a pair of ropes is increased ?

(1465) Under what conditions are gravity-planes of great value in mine haulage ?

(1466) Describe that type of self-acting incline known as a jig.

(1467) On an ordinary self-acting incline run by two ropes, why must one rope run off the bottom of the drum while the other runs off the top ?

(1468) At what point on a self-acting plane run by two ropes do the trains begin to acquire a higher velocity, and why ?

(1469) What mechanisms are sometimes used to replace a drum on a self-acting incline ?

(1470) Under what conditions is it necessary to make the opening for the self-acting plane as narrow as possible ?

For notice of the copyright, see page immediately following the title page.

(1471) Why is timbering on a self-acting incline a source of danger and expense?

(1472) What provision should be made on a self-acting incline to prevent a train from running away, in case the rope should break?

(1473) What advantage has a grip-wheel over a double-rope reel?

(1474) How does a grip-wheel hold the rope?

(1475) What are the advantages of geared drums?

(1476) What are deflecting sheaves, and what are their uses?

(1477) What are the disadvantages of a fleet-wheel?

(1478) On a drum of given size, one rope has two turns around the drum and another has four turns; how much more hold or grip has the latter than the former?

(1479) If two wheels are connected by rope belts, and there are two half coils on each wheel, how many coils would that be equal to if but one wheel were used?

(1480) In case you had a self-acting incline of uniform grade that did not work, by what means could that plane be made self-acting; that is, how and where would you change the grade to make it self-acting?

(1481) What is the cause that retards the extension and rapid action of self-acting inclines at small pitches?

(1482) How many varieties of brakes for self-acting drums are there? Describe each.

(1483) What three important points regarding inclination must be considered in the operation of gravity-planes?

(1484) What is the operative force of self-acting inclines?

(1485) If a body weighing 500 pounds moves down an incline through a distance of 200 feet, and falls a vertical height of 20 feet, what weight rising vertically will balance the body moving down the incline?

(1486) How is the pull affected when the rope is not parallel to the incline?

(1487) What two considerations are most prominent in the operation of gravity-planes?

(1488) If a rope 1,800 feet long weighs 3,500 pounds, and the incline of the plane on which it is used is equal to a grade of 12 per cent., what force is required to move the rope? Ans. 507.5 lb.

(1489) How do you find the friction due to an empty car descending a gravity-plane, and a loaded car ascending?

(1490) A gravity-plane has a grade of 10 per cent. It is 2,500 feet in length, and the rope attached to the empty cars at the foot of the incline weighs 4,200 pounds. A loaded car weighs 4,000 pounds, and an empty one 1,800 pounds. What is the number of cars that must be run in a train to overcome the resistance of the rope at the start of the run? Ans. 7 cars.

(1491) On what kind of inclines can the jig system be successfully used?

(1492) Prove that the jig system can not be used on an incline with 25 per cent. grade, length of road 250 feet, weight of rope per foot of length 1.5 pounds, weight of a full car 4,000 pounds, weight of an empty car 1,800 pounds, and the weight of the jig 2,900 pounds.

(1493) How can the grade be changed in the jig incline mentioned in Question 1492 so as to make it operate?

(1494) What is the best plan to determine the size of the rope for use on a self-acting incline?

(1495) What is the tension in a rope when the loaded cars leave the top of the incline under the following conditions: A loaded car weighs 4,000 pounds and an empty car 1,800 pounds. There are two cars in a train, and the grade is one of 25 per cent.; the length of the incline is 1,500 feet, and the weight of the rope per foot of length is .8 pound? Ans. 1,320 lb.

(1496) What track arrangements should there be at the head of gravity-planes on which the descending loaded cars raise the empty ones?

(1497) What precautions should be taken to prevent cars from descending the plane before they are properly attached to the rope?

(1498) What is a safety-lock, and for what is it used?

(1499) Under what conditions are engine-planes adopted for haulage?

(1500) What are the three general classes of engine-planes?

(1501) In what cases are engine-planes superior to other systems of haulage?

(1502) Where, besides at the head of the engine-plane, are the haulage-engines sometimes located?

(1503) What is a *barney?*

(1504) How are sheaves set to carry the rope around a curve?

(1505) What is a drag-bar, and what is its use?

(1506) Under what conditions is the length of an engine-plane haulage such as to make it uneconomical?

(1507) What is the maximum number of cars that should be run in a train, and what is the minimum grade for an engine-plane to attain an average speed of 10 miles per hour, when empty cars are running back?

(1508) If on an engine-plane 18 loaded cars weighing 4,000 pounds each are hoisted with a haulage-rope 5,000 feet long, and weighing .88 pound per foot, what is the tension in the rope at the moment the engine hauls away from the bottom of the incline, the grade being 5 per cent.?

Ans. 5,730 lb.

(1509) If the train in Question 1508 has a velocity of 10 miles per hour, what is the horsepower required to do the work? Ans. 152.8 H. P.

(1510) Why, in calculating tension on the rope, or the horsepower required, should the full weight of the rope be taken, instead of the average weight?

(1511) Which is more economical: to increase the speed of the haulage so as to make double the number of trips

with half the number of cars and with a lighter rope, or to run at half the speed with double the load and a heavy rope?

(1512) In case the hoisting-shaft is situated in a shallow basin of such character that the loaded trains will run by gravity to the shaft, and with sufficient fall to haul the empty trains into the different stations in the workings, how can engine-plane haulage be modified so as to form a cheap and efficient system of haulage?

(1513) What horsepower is required to haul 25 empty cars along an incline 3,000 feet long, on a grade of 5 per cent., each empty car weighing 1,500 pounds, the weight of the rope per foot of length being .88 pound, and the maximum velocity of the train being 12 miles per hour?

Ans. 94.2 H. P.

(1514) On what classes of roads can the tail-rope system of haulage be adopted with success?

(1515) In what general feature does the tail-rope system of haulage differ from other systems?

(1516) Which is called the main rope and which the tail-rope in the tail-rope system of haulage?

(1517) What are the general features of tail-rope haulage?

(1518) In running a tail-rope haulage system, what are the duties of the engineer to insure the successful operation of the system?

(1519) Under what conditions are geared engines more economical for tail-rope haulage than direct-motion engines, and under what conditions is the direct-motion engine preferable?

(1520) How can a tail-rope haulage be made to haul from two or more different districts in the mine?

(1521) Are the main and tail ropes of a tail-rope haulage always of the same weight per linear foot? If not, why not?

(1522) The greatest length of main and tail rope haulage in a certain mine is 7,000 feet, and the tracks are

perfectly level; the weight per foot of the main rope is .7 pound, the weight per foot of the tail-rope is .6 pound, the full cars weigh 4,500 pounds, the empty cars 1,500 pounds, and the trains consist of 20 cars. (*a*) What is the tension on the main and tail ropes? (*b*) If the average speed of trains is 10 miles per hour, what is the horsepower of the hauling engines due to the maximum tension in the ropes?

Ans. (*b*) 66.1 H. P.

(1523) In a short portion of a mine with tail-rope haulage, the main rope must haul a train of 20 loaded cars up a grade of 3 per cent.; what is the maximum tension in the main rope when a full car weighs 4,500 pounds, the main rope weighs 1.2 pounds per foot, the tail-rope .88 pound per foot, and the length of the track is 6,000 feet?

Ans. 5,262 lb.

(1524) If in a level haulage 6,000 feet long there is a slight up grade 60 feet in length, and the power required for the level road is 90 horsepower, what is the increased power exerted in hauling the load up the short grade?

Ans. 90.9 H. P.

(1525) All the roads of a tail-rope haulage leading to the shaft have a mean fall of 4 per cent. The greatest length of run is 4,000 feet, the mean velocity is 11 miles per hour, the haulage-rope weighs .88 pound per foot, the trains consist of 20 cars, each loaded car weighing 5,000 pounds, and each empty car 2,000 pounds. (*a*) What are the tensions in the main and (*b*) the tail rope, respectively? (*c*) What is the horsepower of the haulage-engine?

Ans. { (*a*) — 1,324 lb.
(*b*) 2,776 lb.
(*c*) 81.4 H. P.

(1526) If in Question 1525 the main rope and tail-rope weigh .6 pound and 3.65 pounds per foot, respectively, (*a*) what will be the tension in each rope, and (*b*) what will be the required horsepower of the haulage-engine?

Ans. (*b*) 74.4 H. P.

(1527) What should be the maximum velocity of trains in main and tail rope haulage, and why?

(1528) What factors must be determined before assuming the number of cars that should be attached in a train in tail-rope haulage?

(1529) How are these factors found?

(1530) How many trains can be run out by a main and tail rope haulage in one day of 10 hours, the speed of the rope being 12 miles per hour, and the length of the five districts being as follows: *a*, 6,000 feet; *b*, 4,800 feet; *c*, 2,500 feet; *d*, 7,000 feet; *e*, 3,000 feet?

(1531) If the output of a mine is 2,500 tons of coal per day, and the number of trains to haul out this quantity is 46, and if each car carries 2.5 tons, how many cars must be used to do the work? Ans. 22 cars.

(1532) Find (*a*) the number of trains that can be run out per day, (*b*) the number of cars in a train, and (*c*) the horse-power of the engine of a main and tail rope haulage, for an output of 2,500 tons in 10 hours. The coal has to be hauled out of 4 districts, *a*, *b*, *c*, and *d*, whose lengths are, respectively, 4,250 ft., 3,012 ft., 756 ft., and 514 ft. The average up grade of the roads is 3 per cent. towards the shaft. The cars carry 2.5 tons each, an empty car weighs 2,000 pounds, the weight of the rope is 1.5 lb. per foot, and the speed of the trains is 11 miles an hour. Allow $\frac{1}{3}$ of the time for delays in haulage.

Ans. (*a*) 91 trains. (*b*) 11 cars. (*c*) 133.6 H. P., nearly.

(1533) What three most important points must be kept in view in the construction of tail-rope couplings?

(1534) What are the uses of the couplings of the tail-rope for a main and tail rope haulage?

(1535) Describe in your own words what you consider the best kind of main socket for main and tail ropes.

(1536) Describe a slip or detaching-hook for disconnecting a haulage-rope with a train of cars.

(1537) Why is it sometimes better to locate the engine and drum for underground haulage at the surface than to fix them in the mine?

(1538) Describe the modes of conducting the haulage-ropes from the surface to the underground workings of a mine.

(1539) Which are better, double or single tracks for main and tail rope haulage in the underground workings of a mine?

(1540) Describe the principles of action of the endless-rope system of haulage.

(1541) Explain the arrangement of the rope band in reference to three of its most important features in endless-rope haulage.

(1542) How are the ropes kept tight in an endless-rope haulage?

(1543) Explain an endless-rope haulage with a single band.

(1544) Explain how a single endless-rope band may be made to do the haulage out of several branching districts, and include in your description the great defects in such an arrangement.

(1545) Explain how an endless-rope haulage is done with main bands and branching bands.

(1546) Show the advantage of gravity-planes worked with an endless rope over those of the other systems of double ropes.

(1547) Show why haulage with an endless-rope system is cheaper for undulating roads than by main and tail rope and other systems of haulage.

(1548) Show the advantage of working each of the deflecting bands of an endless-rope haulage with motors that are actuated by transmitted energy.

(1549) Show how a gasoline-engine might be applied for bands of district haulages.

(1550) Show that in large mines, where the coal has to be hauled out of many districts, it can be better and more cheaply

done in many cases by the endless-rope system than by any other known system of haulage.

(1551) Show that locomotive haulage is better in small mines than large ones, and especially where the roads are comparatively level.

(1552) Show in what important respect the fixing of a tail-sheave for a tail-rope differs from the tail-sheave for an endless-rope haulage.

(1553) What should be the smallest diameter of a sheave to prevent damage from the bending of a steel rope having 19 wires to the strand?

(1554) What should be the smallest diameter of a sheave to prevent damage from the bending of a steel rope having 7 wires to the strand?

(1555) Explain two good tension arrangements for keeping an endless rope tight.

(1556) Explain two methods of attaching and detaching the cars of an endless-rope band.

(1557) The output of a certain mine is 2,500 tons per day, and the length of the road along which the main haulage-band runs the cars is 5,230 feet. A car carries $1\frac{1}{2}$ long tons of coal. The velocity of the rope is 2 miles an hour, and the time for one day's running is 10 hours. As the rope is sometimes stopped to wait for work, the average running time is only 8 hours. (*a*) How many loaded cars are there on the haulage-band at one time? (*b*) What are their distances apart?

Ans. { (*a*) 103 cars. (*b*) 50.68 ft.

(1558) The output in tons, the velocity of the rope, and the weight of coal a car carries are unaltered. If the length of the haulage-road is made one-half of the original length, how will the distances apart of the cars be affected?

(1559) How much can I reduce the weight of a rope by doubling its velocity, and haul out the same weight of coal per day as was hauled before with a heavy rope running at a lower velocity?

(1560) Which is the best speed at which to run an endless-rope haulage, two or four miles an hour?

(1561) How are the ropes attached to the cars in an endless-rope haulage?

(1562) The track for a single band in an endless-rope haulage is 4,720 feet in length, and this rope hauls out 976 long tons of coal in 10 hours. The cars carry $1\frac{1}{4}$ long tons of coal, and an empty car weighs 1,200 pounds. The velocity of the rope is $2\frac{1}{2}$ miles an hour, and the weight of the rope is 3 pounds per foot of length. What is (*a*) the tension in the rope, and (*b*) the horsepower of the hauling engine, supposing the mean grade of the road to be a true level?

Ans. { (*a*) 4337.47 lb.
(*b*) 28.92 H. P.

(1563) The track for a single band on an endless-rope haulage is 4,720 feet in length, and the rope band hauls out 976 long tons of coal in 10 hours. The cars carry $1\frac{1}{4}$ long tons of coal, and an empty car weighs 1,200 pounds. The velocity of the rope is $2\frac{1}{2}$ miles an hour, the weight of the rope is 3 pounds per foot of length, and the road has a mean up grade to the shaft of $2\frac{1}{2}$ per cent. What is (*a*) the tension in the rope, and (*b*) the horsepower of the hauling engine?

Ans. { (*a*) 6291.8 lb.
(*b*) 41.9 H. P.

(1564) The track for a single band on an endless-rope haulage is 4,720 feet in length, and the rope band hauls out 976 long tons of coal in 10 hours. The cars carry $1\frac{1}{4}$ long tons of coal, and an empty car weighs 1,200 pounds. The velocity of the rope is $2\frac{1}{2}$ miles an hour, the weight of the rope is 3 pounds per foot, and the road has a mean down grade to the shaft of $2\frac{1}{2}$ per cent. What is (*a*) the tension in the rope, and (*b*) the horsepower of the hauling engine?

Ans. { (*a*) 2,383.14 lb.
(*b*) 15.89 H. P.

(1565) What is the number of strands in a wire rope for mine haulage, and between what numbers do the wires in a strand vary?

(1566) Explain the difference between a twisted and a locked wire rope.

(1567) Show in what way the durability of a wire rope is affected by bending around and over sheaves.

(1568) Explain, without going much into detail, the general principles that govern the splicing of a rope.

(1569) Explain how a roadbed should be made for underground haulage.

(1570) Briefly explain three different kinds of rollers used for supporting the haulage-rope.

(1571) Briefly explain the mode of attachment and the mode of action of the two classes of engines used for underground haulage in mines.

(1572) As drums can not be used for endless-rope haulage, explain the construction and mode of action of grip-wheels used for that purpose.

(1573) Name the four types of locomotives that are in use for underground haulage in mines.

(1574) If a steam locomotive is used for underground haulage in a mine, on what roads should it run, and what should be the condition of the air in the passage in which the engine runs?

(1575) What particular plant is required for a compressed-air locomotive haulage?

(1576) What should be done in the pumping of compressed air to prevent waste of energy?

(1577) What difference should there be between the pressure of the air in a locomotive-tank and that of the pipe-line?

(1578) What special construction is provided for the night and day work of air-compressors?

(1579) How does temperature affect the pressure of the compressed air in the pipe-lines provided for locomotive haulage in mines?

(1580) What is the advantage of a compressed-air locomotive over that of a steam-power locomotive for underground haulage in mines?

(1581) What difficulty would occur in using gasoline locomotive-engines for underground haulage in mines?

(1582) Show in what important respect the grades are different for locomotive and for rope haulage in mines.

(1583) What rails require elevating on curves for locomotive and for rope haulage?

(1584) What important feature is it necessary for the mining engineer or mine manager to understand in the construction of self-acting inclines?

HOISTING AND HOISTING APPLIANCES.

(1585) What is the motor of a hoisting plant?

(1586) Name the motors that fill the requirements of the hoisting service.

(1587) Explain the two methods according to which engines are used as motors for a hoisting plant. Which of these methods is usually adopted?

(1588) State the advantages of the electric motor for hoisting purposes.

(1589) What are the objections to a direct current for long distance work? Explain how the alternating current overcomes this objection.

(1590) Explain the principle of the multiphase synchronous motor. What are its advantages for hoisting purposes?

(1591) Describe a speed controller for an electric hoist.

(1592) What is a duplex engine?

(1593) Explain why a single-cylinder engine will not fulfil the requirements of the hoisting service, and how a duplex engine will fulfil those requirements.

(1594) (*a*) What is to be gained by the use of condensing engines? (*b*) What are the objections to condensing engines?

(1595) If a condensing engine is to be used for hoisting, what provisions must be made?

(1596) Why should a condensing engine for hoisting purposes be cross-compound?

(1597) What is initial condensation? Why should the initial condensation be greater in a single-cylinder condensing engine than in a single-cylinder non-condensing engine?

For notice of the copyright, see page immediately following the title page.

(1598) Explain why a compound hoisting-engine should have an auxiliary steam-pipe and throttle-valve to admit live steam to its low-pressure cylinder.

(1599) Explain why a condensing hoisting-engine should have an independent air-pump and condenser.

(1600) What is meant by the size of an engine?

(1601) What kinds of work constitute the work required of a hoisting-engine?

(1602) In a hoisting plant, what items make up the load on the rope?

(1603) How small a drum is it safe to use with a pliable steel rope?

(1604) (*a*) What is the net load on a hoisting-engine? (*b*) What is the gross load? (*c*) What is the actual load? (*d*) Give a rule for determining the actual load.

(1605) If we have a shaft or vertical hoistway 1,200 feet deep and wish to hoist from it 3,000 pounds of material at a trip, in a car weighing 1,800 pounds and a cage weighing 2,400 pounds, (*a*) how large a plow-steel rope, 19 wires to the strand, should we use? (*b*) How small a drum would it be safe to wind this rope on? Ans. { (*a*) 1 in. (*b*) 5 ft.

(1606) What would be the actual load on the engine, in Question 1605, if the shaft were double, so that two cages may be used to balance each other, and if no tail-rope were used? Ans. 6,225.6 lb.

(1607) Give a rule for finding the work required of a hoisting-engine per revolution of the drum.

(1608) In example 1606, if the smallest drum advisable were used, what would be the work required of the engine per revolution of the drum. Ans. 99,421.4 ft.-lb.

(1609) What should be the size of the engine cylinders to do the hoisting in the case mentioned in Question 1606? Assume the M. E. P. to be 48.76 pounds per square inch and the ratio of the stroke to the diameter $1\frac{1}{2}$.

Ans. 23 in. × 33 in.

(1610) If the cylinder of an engine is 12 inches in diameter and the stroke is 24 inches, what work per revolution will it perform if supplied with steam at 40 pounds M. E. P.?

Ans. 18,096 ft.-lb.

(1611) In allowing for the extra force necessary to overcome friction and accelerate the moving parts, why is a certain percentage of the gross load taken instead of a larger percentage of the net load?

(1612) (*a*) What should be the size of the cylinders of a duplex hoisting-engine which performs 36,000 foot-pounds of work per revolution, if it is supplied with steam at 40 pounds M. E. P., and if the stroke is to be $2\frac{1}{2}$ times the diameter? (*b*) What is the least turning moment that this engine will exert?

Ans. { (*a*) 14 in. × 35 in.
(*b*) 107,757 in.-lb.

(1613) How do you determine the turning moment exerted by the load on the drum?

(1614) If a tail-rope is used, must the engine be larger than when no tail-rope is used, or may it be smaller?

(1615) If a shaft be made single instead of double, thus preventing the use of two cages and two cars balancing each other, will the engine need to be larger or smaller?

(1616) State the relative advantages of steam and compressed air for hoisting-engines, and state the conditions which influence the choice between steam and air.

(1617) Why should hoisting-engines be equipped with cylinder relief-valves? Explain the principle of the relief-valves illustrated in Fig. 892.

(1618) What are the three principal kinds of drums?

(1619) If we have a shaft 1,800 feet deep and wish to hoist from it such a load as would, with the weight of the rope, require a rope $1\frac{1}{2}$ inches in diameter, how long a parallel drum must we have, allowing $\frac{1}{4}$-inch between the coils?

Ans. 11 ft. 8 in.

(1620) What is the object of using conical instead of cylindrical drums?

(1621) (*a*) How would you determine the small diameter of a conical drum? (*b*) Give a rule for determining the large diameter of a conical drum.

(1622) Should metal ropes for hoisting purposes be allowed to coil upon themselves? Why? What is the chief objection to the use of flat ropes?

(1623) If we wish to build a pair of conical drums for a vertical shaft 800 ft. deep, from which it is desired to hoist 4,000 lb. of material at a trip, in cars weighing 3,000 lb. each and with cages weighing 3,200 lb. each, what should the large and small diameters be? The rope is to be of cast steel, 19 wires to the strand.

Ans. { Large diameter = 9 ft.
Small diameter = 7 ft.

(1624) What are the objections to both cylindrical and conical drums?

(1625) Describe the Whiting system of hoisting. What are its advantages?

(1626) (*a*) What is the use of a brake of a hoisting plant? (*b*) What load may be brought upon the brake?

(1627) What is a block brake? Describe the strap brake.

(1628) Why should the ends of a brake strap be kept close to the drum?

(1629) In the case of a very large strap brake, how would you keep the upper half away from the drum when the brake is off?

(1630) Why can not the force that a man is able to exert be so multiplied by levers as to be sufficient for any brake?

(1631) Show what can be accomplished by a differential leverage, and explain the principle involved.

(1632) Having the force that is to be applied to the end of a brake strap, how can we determine the resistance that the strap offers to the rotation of the drum?

(1633) If the hoisting plant is so large that a man can not do the braking by hand, what other agents may be used? How can these agents be applied to a brake-gear?

(1634) What is a hoist indicator? Describe a positive-motion indicator.

(1635) Explain the Kœpe system of hoisting.

(1636) Explain a method of capping a hoisting rope.

(1637) What is a detaching-hook, and why is it used?

(1638) What is a tail-rope? What is gained by using a tail-rope?

(1639) What is a cross-head for mining purposes? For what is it used?

(1640) (*a*) Why is a cross-head made to rest on the rope without being attached to it? (*b*) Explain a way to make such an arrangement.

(1641) What is a cage, and what is its use?

(1642) What two general kinds are there?

(1643) Explain the action of the usual kind of safety-catches for shaft cages.

(1644) What are gunboats, or skips?

(1645) What are rope carriers used for?

(1646) What are sheaves, and for what are they used?

(1647) What are the advantages of a sheave with wrought-iron spokes over one with cast-iron arms?

(1648) Explain the method of putting in wrought-iron spokes tangentially.

(1649) Describe a method of dumping a gunboat, or skip.

(1650) What are landing fans, or keeps?

(1651) How would you find the direction and amount of the stress to which a head-frame was subjected? Explain fully.

SURFACE ARRANGEMENTS
OF
BITUMINOUS MINES.

(1652) How does a small seam and bad roof influence the size of the mine-car?

(1653) At a shaft mine with two openings, how should the machinery for hoisting, ventilation, pumping, and underground haulage and coal cutting be grouped around these openings?

(1654) What conditions determine the opening of a shaft mine with a landing on a trestle, and what are the features in the arrangement of the surface works in this case?

(1655) What conditions determine the opening of a shaft mine with only one landing, and that on natural ground, and what are the features in the arrangement of the surface works in this case?

(1656) In what respects do the requirements at a shaft mine differ from the requirements at other mines in regard to stables, hay, and feed?

(1657) What should be the limits for the foot of the brace between the resultant and underwinding rope?

(1658) What should be the limit of the distance of the center of the engine drums from the center of the shaft, if the center of the head wheels is 60 ft. vertically above the center of the engine drums?

(1659) What are the favorable conditions for the use of a self-dumping cage?

(1660) When can a tipple arrangement be introduced for dumping cars on both sides of the shaft?

For notice of the copyright, see page immediately following the title page.

(1661) What is the advantage of returning empty cars to the cage by the rear of the shaft, as compared with returning them on the same side from which the loads are removed?

(1662) In what instances is a tipple platform laid with steel plates preferable to track arrangements?

(1663) What are the advantages of car-shifting devices?

(1664) What grades are best suited for loaded and empty tracks at a shaft landing on a trestle?

(1665) What buildings will generally be located on one side of the shaft, what on the other side, and why?

(1666) At a shaft location with landing on the ground, where is the best location for a mechanical lift for returning empty cars to the mine by gravity?

(1667) What branches from the return empty track are needed in the yard, to the various shops, buildings, etc.?

(1668) What will be about the smallest and largest number of cars that a landing at a slope mine will be required to hold?

(1669) What are the grades for outside mine tracks if made gravitating?

(1670) How is the connection with the yard and slope tracks made?

(1671) What is the best arrangement in the surface works for pumping at a slope mine?

(1672) What is the best arrangement for a slope landing for 10 cars, where the distance from the knuckle to the railroad-tracks is 40 feet?

(1673) What should be the least height of a drift mine opening, above the railroad-tracks, so that cars may gravitate to the tipple for dumping?

(1674) What number of cars is required to get out 1,500 tons in 8 hours, where it takes a car 2 hours to make a round trip from the tipple into the mine and return? Capacity of car is 2 tons.

(1675) What is the best arrangement for long tracks outside of a drift, where the ground is limited between the opening and railroad-tracks?

(1676) What are the main features in the surface arrangements at a drift mine?

(1677) What will be the minimum height of a mine opening above the tipple, to be operated by an inclined plane?

(1678) How should mines of less than above height be opened?

(1679) How are tracks arranged at the top and bottom of an inclined plane?

(1680) What is the usual number of cars lowered on an inclined plane and what influences the number?

(1681) How does a steep hillside influence the location of buildings?

(1682) What should be the greatest angle of the plane for lowering cars loaded above the top?

(1683) What should be the greatest angle of the plane for lowering cars loaded level full?

(1684) How is the coal handled on steeper angles?

(1685) What is a safe minimum grade for a gravity plane (*a*) 500 feet long? (*b*) 2,000 feet long?

(1686) How should coal be lowered when it outcrops on a bluff 45 to 65 feet above and near the railroad-tracks? How, if the coal is soft?

(1687) What are the three different styles of tipple dumps?

(1688) What is the best arrangement of tracks for push or cradle tips?

(1689) What is the general arrangement of tracks for a cross-over tip?

(1690) Describe the working of a cross-over tip.

(1691) Where should the center of the car tip be located with respect to the intersection of the line of chute with the tipple platform?

(1692) What should be the angle of the chute for (*a*) lump coal? (*b*) mine-run? (*c*) screening?

(1693) What is the angle of a loading basket (*a*) when shut, and (*b*) when open?

(1694) What are the standard sizes of screen bars?

(1695) What are the standard sizes of their openings?

(1696) Through and over what size bars will nut coal pass?

(1697) How should coal containing very much fine coal be screened?

(1698) What is the advantage of two tipple dumps over one in loading?

(1699) What are the arrangements for loading box cars?

(1700) Where is the weighing of coal generally done?

(1701) How should coal be weighed where it is desired to know the weight of the lump and the screening less than 1½ inches, separately?

(1702) Where is the best location for the weigh-beam?

(1703) How should lump coal that must be broken and picked to remove slate be cleaned?

(1704) How is nut coal containing few impurities cleaned?

(1705) How is nut coal or smaller screening containing much impurity cleaned?

(1706) In what places may rock be dumped from mine-cars?

(1707) If coal breaks easily, how is it dumped?

(1708) How should easily broken coal with much screenings be screened and lowered from small or considerable heights?

(1709) What are the usual curves, grades, and distances from center to center of railroad-tracks?

(1710) What should be the length of each siding where the proportion of the sizes of 1,500 tons daily are as follows:

lump, 70%; nut, 15%; pea, 8%; slack, 7%—cars 34 feet long, holding 30 tons each?

(1711) What is the sharpest curve that should be used for a 14-inch wheel, 20 inches center to center of axle, and 3-foot gauge?

(1712) What should be the grades for loads and empties on long gravitating tracks, and where should a device be introduced for raising the empties for returning them to the mine?

(1713) What grade should be given if the cars start from a standstill?

(1714) If it is desired to maintain tracks at a level, instead of gravitating, how can cars be handled for long distances?

(1715) What will be the length of a mine-car siding for loaded trips where the cars hold 2 tons, trips arriving every 20 minutes, for a day of 8 hours? The output is 1,500 tons per day, and the cars are 8 feet long.

(1716) Under what conditions would iron, wood, and stone tanks be used as reservoirs for the water-supply in preference to an earthwork basin or dam?

(1717) Mention the conditions that determine the relative location of the blacksmith shop, carpenter shop, and machine-shop.

SURFACE ARRANGEMENTS
OF
ANTHRACITE MINES.

(1718) State the difference, if any, between a drift and a tunnel.

(1719) When the engine is not direct-acting, why is it best to locate the spur-wheel in the center of the hoisting drum?

(1720) In what way would you make the positive test to determine whether the boiler feed-water contains sulphuric acid?

(1721) In separating the slate from the coal, what objection is there in having all the slate pickers arranged one above the other in one continuous chute?

(1722) What are the three physical characteristics upon which the operation of separating the slate from the coal by mechanical means is based?

(1723) In locating an engine to hoist out of a shaft, what are the points to be taken into consideration?

(1724) In Fig. 1009, Art. **2811**, the difference of elevation between the walls that support the breaker and those that support the tower is 12 feet, and the distance between their centers is 200 feet. The height of the breaker at the point where the dump chute enters the breaker is 90 feet, and the pitch of the dump chute is 3.5 inches to the foot. (*a*) What is the height of the tower to dump chute, and (*b*) what is the length of the dump chute?

Ans. { (*a*) Height, 136.33 feet.
{ (*b*) Length of chute, 208.33 feet.

(1725) What is a *telegraph*, and what is it used for?

For notice of the copyright, see page immediately following the title page.

(1726) In order to have a well-arranged plant, how should the structures erected upon the surface be arranged, and why?

(1727) State briefly the different methods of handling culm.

(1728) What device to prevent breakage is adopted in connection with rolls?

(1729) What is a proper grade for the empty and loaded tracks leading to and from the breaker, and over which the railroad-cars run?

(1730) What effect have the movable screening bars on the height of the breaker?

(1731) What is the object in using an elliptical gear in operating the piston of a piston jig?

(1732) What are the objections to locating a hoisting-engine in the lower part of the breaker?

(1733) What do you understand by lump-coal screenings?

(1734) What precautions should be taken in locating engines that are used for lowering and hoisting men?

(1735) What does the capacity of a breaker depend upon?

(1736) What does the machinery for conveying the coal in the breaker consist of?

(1737) Name the different kinds of openings which are used at anthracite collieries to furnish the coal to operate the plant.

(1738) Give the pitches of chutes down which the different sizes of wet and dry coal will slide.

(1739) Why is it more expensive to prepare coal by the wet method than by the dry?

(1740) Explain one of the main points to be taken into consideration in choosing the site for a breaker.

(1741) In a slate-picker screen how are the slits or longitudinal openings in slate-picker segments arranged in reference to the screen shaft?

(1742) What are the principal requirements of anthracite winding-engines?

(1743) What are the two methods of removing impurities from coal?

(1744) What are the two main points in connection with jigs in order to have a good separation?

(1745) For what sizes and for what purpose is a pentagonal screen used?

(1746) What constitutes a good steam-brake?

(1747) What are the principal objects aimed at in preparing anthracite coal?

(1748) State the classes into which the machinery for sizing coal is divided.

(1749) State the difference between the two types of coal jigs used in the anthracite region.

(1750) What is the reason for locating breaker engines at some distance from the main structure?

(1751) Why is it that anthracite coal is not marketable as it comes from the mines?

(1752) Give the sizes of the different meshes used in sizing coal.

(1753) In locating a steam plant, what important point must be kept in view?

(1754) What does the capacity of screens depend upon, and what is the effect of increasing the pitch?

(1755) What governs the size of the carpenter and blacksmith shops at an anthracite colliery?

(1756) What arrangement is in use to keep the slits in a cast-iron slate-picker segment from becoming clogged?

(1757) In designing a boiler house, what are some of the main points to be taken into consideration?

(1758) In designing a head-frame, what should the height be, in relation to landing and overwinding points?

(1759) What are the methods in use for driving screens?

(1760) Where is lump coal made?

(1761) What is a *main screen?*

(1762) In what way do the corrugated rolls differ from other rolls?

(1763) What is the best location for the powder house?

(1764) In case of a long line shaft, made up of a number of short pieces of shafting, explain how they are coupled, and show a sketch of the same.

(1765) In what way do the prepared-coal rolls differ from the main rolls?

(1766) Give the name of the screen or screens into which the coal enters after passing through the main screening bars.

(1767) Why is it more economical to use a "gunboat" than an ordinary mine-car on slopes where the pitch is very heavy?

(1768) Make a sketch showing the method usually adopted in locating a fan, when a main slope and a tender slope are used to operate the plant.

(1769) State the classes into which the machinery for preparing anthracite coal is divided.

(1770) State the difference between the two types of movable screens.

(1771) What is the duty of the platform men?

(1772) Where and for what purpose are safety blocks used?

(1773) What type of fan is used in the anthracite region in preference to all others?

(1774) Name in their order the different sizes of coal prepared in the anthracite breaker, commencing with the largest size.

(1775) From the tests thus far obtained from fans, what peripheral speed gives the best results?

(1776) In jigging coal, what is the separation due to?

(1777) From the description and the end view, Fig. 1001, Art. **2783,** make a sketch showing the plan of the machine, so as to show that you understand its operation.

(1778) What is a breaker and what is its purpose ?

(1779) What is the difference between the specific gravity of coal and of slate ?

(1780) Where are the main rolls or crushers generally located ?

(1781) What are corbel blocks used for ?

(1782) What is a slush bank ?

(1783) Where the power in the breaker is to be transmitted at a slow rate, what kind of belting is preferable ?

(1784) Where should the colliery office be located, and why ?

(1785) As a rule, how many sets of rolls are there in a breaker ?

(1786) Define a mud screen.

(1787) What are loading lips; where and for what purpose are they used ?

(1788) In locating a culm pile or heap, where is it advisable not to deposit the culm, and why ?

(1789) In comparing the surfaces of a gyrating and a circular screen, what advantage has the former over the latter ?

(1790) What do you understand by fixed rolls ?

(1791) Describe a slate-picker screen.

PERCUSSIVE AND ROTARY BORING.

(1) State the principal uses of bore holes.

(2) What is percussive boring?

(3) What are the essential parts of a diamond drill?

(4) What are intermittent cutters? State their characteristics.

(5) Describe the hydraulic feed.

(6) How does a driller determine whether or not he is using a jumper or churn drill of the proper weight?

(7) Describe the differential feed.

(8) Upon what does the form of the cutting edge of a percussive bit depend?

(9) Of what are the diamonds used in diamond drilling composed, and what kinds are used?

(10) If the velocities at impact are the same, how do the cutting forces vary, providing the weights are different?

(11) For what can hand-power drills be employed, and what is their capacity?

(12) What are the guides by which the progress of the diamond drill is judged?

(13) For a hole requiring a set of bits, why is it that each bit should be slightly smaller than the one it follows?

(14) Why is it that the drifting is always worse when employing an old or worn core-barrel?

(15) State the principal features and dimensions of the standard type of power percussive rock-drills.

For notice of the copyright, see page immediately following the title page.

(16) Describe the setting of a diamond bit.

(17) How is the core removed from a diamond-drill hole?

(18) For a given amount of power, what relation should exist between the frequency and force of each blow in order to do the most effective work?

(19) What is the difference between the Kind-Chaudron and the American method of boring?

(20) Explain the action of the jars in drilling.

(21) Define rotary boring.

(22) For what special purpose is the ratchet used?

(23) What are the functions of the sinker-bar and the auger-stem?

(24) What two styles of feed mechanism are employed to force the diamond bit to its work?

(25) When a diamond-drilling machine is provided with a fixed head, how is the driving mechanism removed from over the hole, and what does this necessitate in regard to the steam-pipe connections?

(26) Give the order of the tools in a hole being bored by an American rig.

(27) State the principle by which an electric percussive drill is made to operate.

(28) What is the chief use of hand-drilling machines for rotary boring? Describe each class.

(29) What determines the height of a derrick?

(30) What relation should exist between the angle through which a percussive drill should be turned and the depth of cut?

(31) Name the kinds of drills used in percussive boring.

(32) What is (*a*) a stand-pipe? (*b*) a casing?

(33) Describe the swinging head as applied to the diamond drill, and state its use.

(34) In boring holes of different diameters in the same rock, what relation should exist between the angles through which the bits are turned in the holes?

(35) Describe the spring-pole method of boring.

(36) What part of the cutting edge of a percussive bit does the least amount of work, and why?

(37) When should the cutting edge of a percussive bit form an acute angle in cross-section, and when an obtuse angle?

(38) Under what circumstances are hand-power percussive drills used?

(39) How is fitchering prevented while starting a hole?

(40) What is the use of the temper-screw?

(41) In what kind of rock is it advantageous to use a flat-edged bit?

(42) How is the cutting edge of a percussive bit formed to drill in rock having narrow cracks in it?

(43) Describe the method of surveying a diamond-drill hole by means of plummets and magnetic needles.

(44) In what direction do inclined diamond-drill holes have a tendency to drift?

(45) What must be provided for a diamond-drilling plant which is to operate from the surface?

(46) What is meant by lost water?

(47) What disadvantage is there in using **Z** bits?

(48) How does diamond-drill work carried on underground, as in a mine, differ from that carried on at the surface?

(49) How are straight-edged bits dressed up, and what special tools are used to sharpen and shape double-edged bits?

(50) When drilling in soluble material, how can the driller prevent it from being dissolved?

(51) What relation is there between the value of the record furnished by the diamond drill and the character of the deposit sought as to its physical characteristics?

(52) What advantage is there in using double-edged bits?

(53) What effect has the length of stroke upon the cutting force of a percussive bit, providing the actuating force remains the same?

(54) What records should be kept concerning the diamond-drill hole?

(55) What is the result of using a light hammer to strike a relatively heavy drill?

(56) Why is the X bit a better form than the + bit?

(57) State requirements of a good percussive power drill.

(58) Why are dead weights used on the tripod of a power percussive drill?

(59) Describe the method of surveying a diamond-drill hole where there is magnetic attraction.

(60) What means are employed to fix drilling columns rigidly in place?

(61) Under what conditions are holes drilled with a percussive bit most likely to be deflected from a vertical line?

(62) Why are posts or grips necessary for rotary drills?

(63) What is a fishing tap, and for what is it employed?

(64) For what purpose is Miller's patent spudding attachment used?

(65) Give the probable cause of drift in a diamond-drill hole.

(66) Explain the action of a reamer which acts percussively.

(67) What relation should exist between the total weight of a percussive power drill and the steam or air pressure upon the piston-head, and why?

(68) What are the advantages and disadvantages of carrying on diamond drilling from the bottom of a drilling pit?

(69) Give the number of strokes per minute for large and for small power percussive drills.

(70) Why is it best to use a set of drills rather than a single drill for boring holes with hand-power rotary drills?

(71) What size of casing with respect to the hole is used, and how are crevices in the hole closed to shut out water?

(72) What causes the drill-rods in diamond drilling to part?

(73) Describe a power percussive drill.

(74) What two classes of hammers are used in drilling? Explain the manner of using each.

(75) What general rule can be given with regard to the size of a diamond bit to use?

(76) What are some of the special advantages possessed by the diamond drill for prospecting?

(77) In what respect do the various power percussive drills differ most widely?

(78) Explain the construction and use of a diamond reaming bit.

(79) Why is it that two men can do proportionally more work than one man when a comparatively heavy churn-drill is used?

(80) In what case is a churn-drill most effective, and for what kind of work is it least efficient?

(81) To what is the dissipation of energy proportional when a hammer strikes a drill?

(82) Why is the material at the middle of some forms of percussive bits reduced?

(83) When is it advantageous to enlarge a churn-drill near its middle?

(84) Define (*a*) tempering; (*b*) annealing.

(85) What points should be observed in tempering a drill?

(86) What can you say in regard to the temperature of steel of different qualities when heated to the same color?

(87) Give the order of the running colors when the steel is heated to a dull redness.

(88) What is the use of the drive tube?

(89) How are lost bits recovered?

(90) Which is the more important, accuracy or speed, in diamond-drill work, and why?

COMPRESSED-AIR COAL-CUTTING MACHINERY.

(1) What is, in general, the most difficult and expensive operation in coal-mining?

(2) State the two great powers used to operate coal-cutting machines.

(3) Which is the more economical, to use air under low or under high pressure for running coal-cutting machines, and why?

(4) Describe briefly a pick machine.

(5) What form of a working-face is the most suitable for machine mining, and why?

(6) Upon what does the force of a pick machine largely depend?

(7) For what kind of work are shearing-machines best suited?

(8) Explain the method of moving chain-cutter machines from place to place.

(9) How is coal removed from its solid state in the mine?

(10) What advantages are there, with regard to ventilation, in the use of compressed air for running coal-cutting machines?

(11) What features make a pick machine suitable for mining almost any seam of coal where mechanical methods are at all applicable?

(12) Explain the method of operating a pick machine.

For notice of the copyright, see page immediately following the title page.

(13) What depth of undercut gives best results?

(14) The diameter of the piston of a pick machine is 4 inches, the weight of the piston and pick is 250 pounds, the length of stroke is 12 inches, and the air-pressure is 80 pounds per square inch. What is the velocity of the pick at impact? Ans. 16.08 ft. per sec.

(15) Describe a chain-cutter machine.

(16) With what special feature is the bed-frame of a chain-cutter machine for working in low seams provided?

(17) Give the working capacity of a good chain-cutter machine.

(18) State conditions favorable and unfavorable to chain-cutter machines.

(19) Explain the construction of the cutter-bar machine.

(20) For what reasons can we infer that machine mining will largely replace hand methods?

(21) How is the compressed air furnished for the machines?

(22) What advantage is there in having an adjustable cut-off on pick machines?

(23) What relation should exist between the force and the number of blows of a pick machine in order to get the greatest amount of useful work from a given power?

(24) For what reason are the cutters of a chain-cutter machine made detachable, and by what means are they held in place?

(25) What gives the greatest trouble in handling chain-cutter machines?

(26) State the principle on which the auger machine is made.

(27) Into what two classes may coal-cutting machines be divided?

(28) By what means is the compressed air carried from the compressor to the machines at the working-faces?

(29) State how the air is cooled during compression.

(30) How are pick machines moved from place to place?

(31) What is the working capacity of a good pick machine?

(32) What is the approximate cost per linear foot of driving heading with the Stanley header?

(33) Describe a pick or direct-acting shearing-machine.

(34) What restricts the size and weight of mining-machines?

(35) What conditions make it most economical to work a seam of coal with chain-cutter machines?

(36) If an 18-horsepower engine drives a cutter chain at the rate of 330 feet per minute, what is the cutting force of the chain? Ans. 1,800 lb.

(37) How are the machines connected to the pipe system, and what advantages are thereby gained?

(38) What is the result in case a pipe is burst by compressed air?

(39) What conditions preclude the use of pick machines?

(40) A 6-horsepower pick machine makes 200 strokes per minute; what amount of work is done per stroke by the pick? Ans. 990 ft.-lb.

(41) Explain the method of operating a pick machine.

(42) What advantage is there in cooling the air during compression?

(43) Explain the method of shearing with the ordinary pick machine.

(44) In low seams where is the undercut sometimes made?

(45) What is the cutting force of a pick machine whose pick and piston weigh 175 pounds? The pick cuts to a depth of $2\frac{1}{2}$ inches and has a velocity at impact of 22 feet per second. Ans. 6,320.9 lb.

(46) What kind of a mining-machine is best suited for working seams of coal containing considerable amounts of iron pyrites and having rolls in the bottom?

(47) Describe briefly the Stanley header, and state its principal use.

(48) By what means is the coal sometimes loaded after the Stanley header?

(49) What improvement in the methods of working coal-mines is such machines as the Stanley header and shearing-machines likely to accomplish?

(50) State briefly any experience you may have had with compressed-air coal-cutting machines.